APPENDIX H

STRUCTURAL DESIGN WORK RELATED TO WORKGROUP COLLABORATIONS

THIS PAGE INTENTIONALLY LEFT BLANK

Appendix H-1

Structural Design Work Related to 2006 USACE Consultation

THIS PAGE INTENTIONALLY LEFT BLANK

Trinity Parkway Retaining Wall Preliminary Design

Halff Associates, November 2006
Prepared By: Saman A. Aryana

Trinity Parkway is a proposed tollway located generally to the west of downtown Dallas, Texas. Parkway alternative alignments 3A, 3B and 4 are located within the Dallas Floodway and would require construction of retaining walls in some locations to support fill placement associated with the proposed US Army Corps of Engineers (USACE) expansion of the Floodway levees. These walls are on the levee side of the Parkway main lanes in the general vicinity of downtown Dallas, at locations where the lanes underpass existing bridges. The purpose of this design report is to prepare a preliminary structural analysis for the proposed retaining walls in compliance with USACE design manuals and guidance documents. Three representative locations have been chosen for this analysis at the low points of the proposed northbound main lanes of Alts 3A, 3B and 4 under existing bridges at: 1) Woodall Rogers Freeway Extension (proposed), 2) North Corinth Street, and 3) Commerce Street.

All the pertinent design USACE documents were downloaded and used in the analysis. The following is the text of an email sent to Halff Associates by Ms. Anita Branch with USACE that entails the pertinent design documents.

"Per our discussions of this afternoon, attached is a list of design standards used by the Corps. This is not the full list, just some of the most frequently used manuals and regulations associated with flood control projects. Other applicable engineering manuals and engineering regulations cited in the AEIM or these standards are incorporated by reference. "

EM 1110-1-1804. Geotechnical Investigations
EM 1110-1-1904. Settlement Analysis
EM 1110-1-1905. Bearing Capacity of Soils
EM 1110-1-1906. Soil Sampling
EM 1110-1-2908. Rock Foundations
EM 1110-1-3500. Chemical Grouting
EM 1110-2-1901. Seepage Analysis & Control for Dams
EM 1110-2-1902. Stability of Earth & Rockfill Dams
EM 1110-2-1906. Laboratory Soils Testing
EM 1110-2-1908. Instrumentation of Embankment Dams & Levees
EM 1110-2-1911. Construction Control for Earth and Rock-Fill Dams
EM 1110-2-1913. Design and Construction of Levees
EM 1110-2-2000. Concrete for Civil Works Structures
EM 1110-2-2006. Roller Compacted Concrete
EM 1110-2-2007. Concrete Lined Flood Control Channels
EM 1110-2-2200. Gravity Dam Design
EM 1110-2-2302. Construction with Large Stone
EM 1110-2-2502. Retaining and Flood Walls

EM 1110-2-2504. Design of Sheet Pile Walls
EM 1110-2-2906. Design of Pile Foundations
EM 1110-1-2908. Rock Foundations
EM 1110-1-3500. Chemical Grouting
EM 1110-2-6050. Response Spectra & Seismic Analysis - Concrete Structures

ER 1110-1-261. Quality Assurance of Laboratory Testing Procedures
ER 1110-1-1807. Procedures for Drilling in Earth Embankments
ER 1110-1-8100. Laboratory Investigations and Testing
ER 1110-2-1806. EQ Design & Evaluation for Civil Works Projects
ER 1110-2-8152. Temporary Cofferdams & Braced Excavations
ETL 1110-2-569. Design Guidance for Levee Underseepage
SWD-AEIM. Architectural & Engineering Instructions Manual
TM 5-822-5. Pavement Design, Roads, Streets, Walks & Open Storage Areas

Copies of these manuals may be downloaded from the following websites:

http://www.usace.army.mil/inet/usace-docs/
http://www.army.mil/usapa/eng/

The USACE design manuals that are directly relevant to the structural analysis and design of the retaining walls are as follows:

- EM 1110-2-2502. Retaining and Flood Walls
- TM 5-818-1. Soils and Geology Procedures for Foundation Design of Buildings and Other Structures (Except Hydraulic Structures)
- SWD-AEIM. Architectural & Engineering Instructions Manual

The structural integrity of the retaining walls was investigated according to TM 5-818-1. The factors of safety used in the preliminary design for overturning, sliding, and bearing capacity were 1.5, 2, and 3, respectively. Settlement and tilting was not a major concern and would have to be investigated once the design is in its final stage.

Terracon Consulting Engineers were hired to provide Halff Associates with appropriate geotechnical properties of the soil. Terracon was also responsible for the investigation of the Deep-seated failure criterion as outlined in the USACE design manuals. The following is the text of an email sent to Halff Associates by Tim Abrams with Terracon that provides design recommendations.

"The following design parameters are recommended for evaluating the structural design of the wall. At-rest earth pressure for 4H:1V back slope undrained conditions equivalent fluid pressure 125 pcf and for drained conditions a equivalent fluid pressure of 90 pcf. These pressures are based on clay backfill with Plasticity Index (PI) between 25 and 35 and design unfactored friction angle of 24 degrees. Ultimate sliding resistance coefficient on retained side of key for soil on concrete 0.36. Passive resistance

on river side of key ultimate equivalent fluid pressure 72 pcf. Factor of safety respect to sliding 1.5. Allowable bearing pressure 1,700 psf, which includes factor of safety of 3. Force resultant should fall within middle third of foundation to maintain 100 percent of base area in compression. We will evaluate overall stability and check sliding stability once the lengths of the wall bases have been initially sized."

Several different wall geometries were investigated as directed by Martin Molloy (Halff Associates, President). A typical cross section of the retaining wall that satisfied the design requirements and seemed to be geometrically appropriate for the three crossings in question was developed and sent to Tim Abrams with Terracon for further investigation. A typical retaining wall cross section that could be used for the promenade area was similarly developed and sent to Mr. Abrams for further investigation.

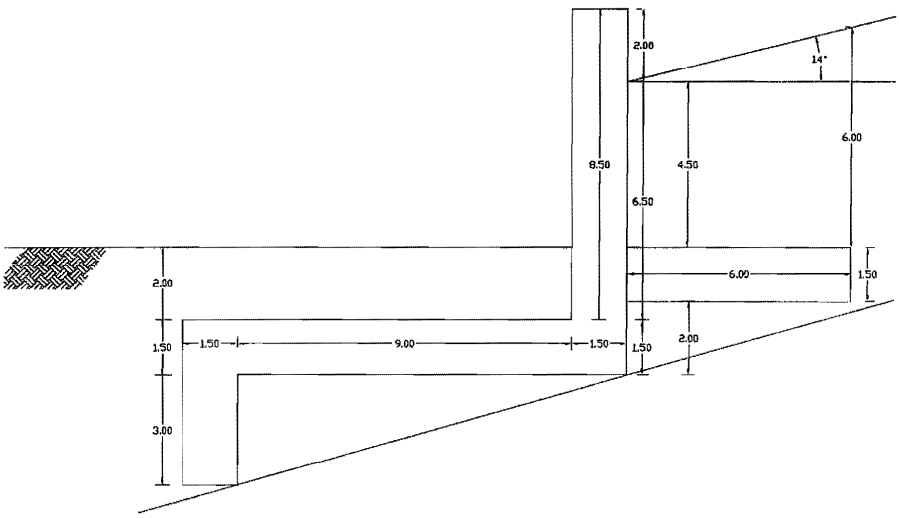

Figure 1: Typical Retaining Wall Cross Section for the Three Crossings

The primary objective of the geometry of the cross sections was to avoid cutting into the existing levee. Thus, the cross section in Figure 1 shows a heel that is offset from the remaining portion of the footing. If cutting into the existing levee is allowed, the cross section shown in Figure 2 can be used. The typical cross section developed for the walkway area is shown in Figure 3. According to Tim Abrams, the retaining walls presented in Figures 1 and 3 meet the deep-seated failure requirement with factors of safety over 1.5.

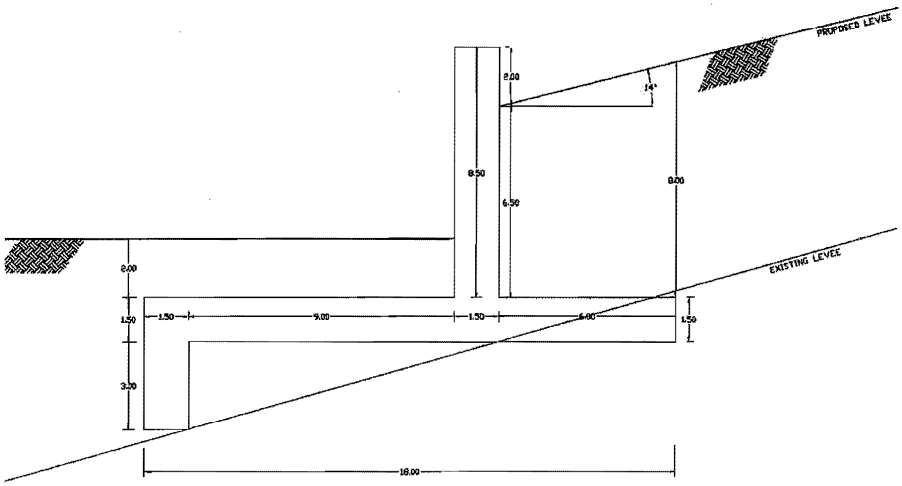

Figure 2: Typical Retaining Wall Cross Section for the Three Crossings

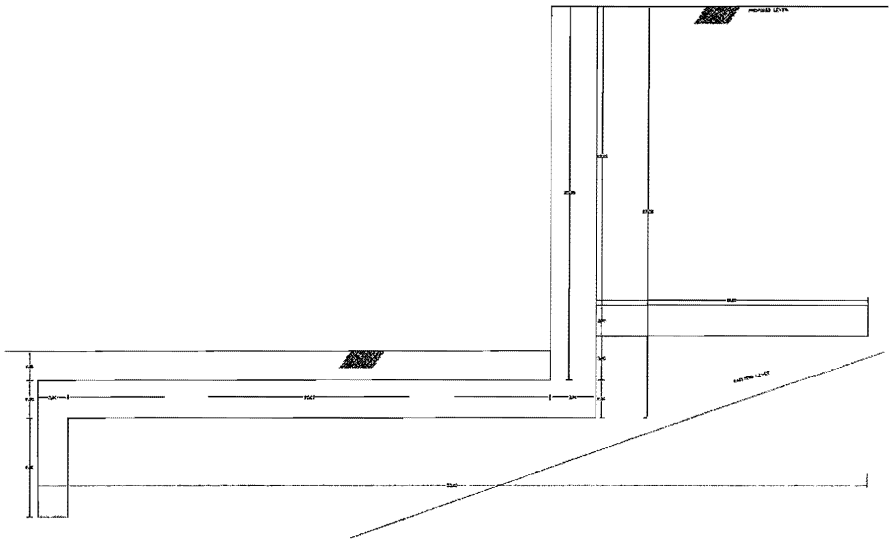

Figure 3: Typical Retaining Wall Cross Section for the Promenade

There was a meeting between USACE, NTTA, City of Dallas, Terracon, and Halff Associates on Friday 11/3/2006 in the Federal Building in Downtown Fort Worth, Texas. The following people attended the meeting:

Table 1: List of Friday 11/3/2003 Meeting Attendees, Extracted from the Sign-In Sheet

Name	Representing
Anita Branch	CESWF-EC-DG
Ching Hang Wong	CESWF-OC
Kevin Craig	CESWF-PM-C
Gene Rice	CESWF-PM-C
Saman Aryana	Halff Associates
Matt Craig	Halff Associates
Chris Anderson	NTTA
Martin Molloy	Halff Associates
Tim Abrams	Terracon
Les Perrin	CESWF-EC-DG
Greg Ajemian	City of Dallas
John Van Leevwen	CESWF-OD-TM
Mark Sissom	CESWF-OD-TM
Billy Colbert	CESWF-PER-EE

During the meeting, the proposed retaining wall cross sections were presented to the attendees. The cross sections as presented are shown in Figure 4. Additionally, an alternative alignment of the roadway was presented that would avoid the existing and the proposed levees by relocating the Parkway main lanes of Alts 3A, 3B and 4 further away from the levee slopes. (i.e. the initial version of Alts 3C and 4B.) Thus, it would eliminate the need for the subject retaining walls. The USACE staff present showed preference for the relocated roadway instead of the current location roadway with fill walls. This report nevertheless documents the design work prior to the meeting.

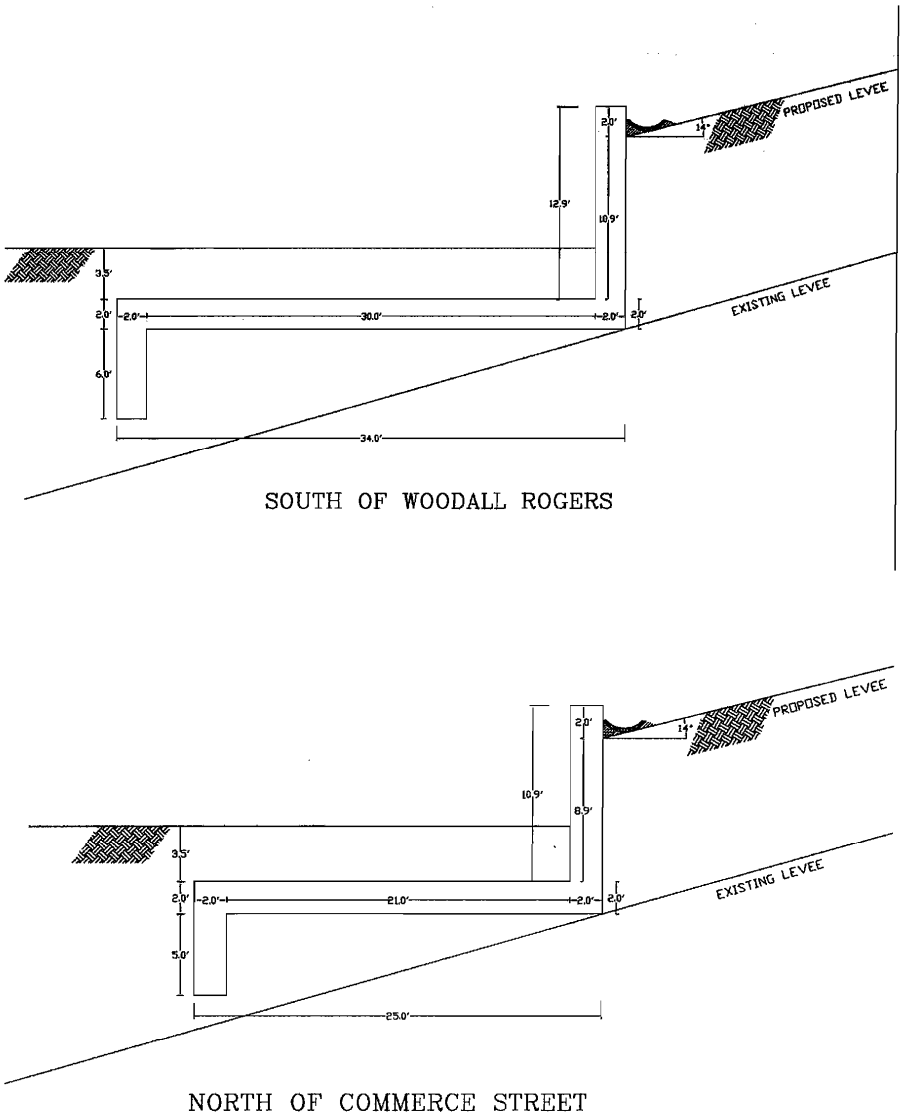

Figure 4: Retaining Wall Cross Sections Presented In the 11/3/2006 Meeting

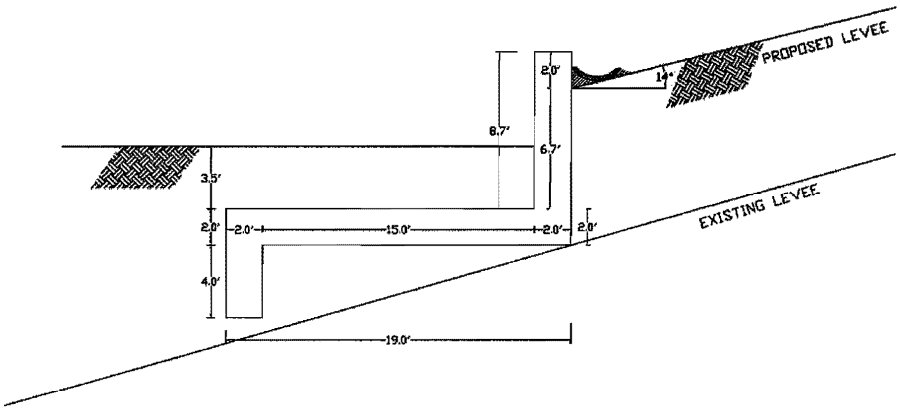

SOUTH OF NORTH CORINTH STREET

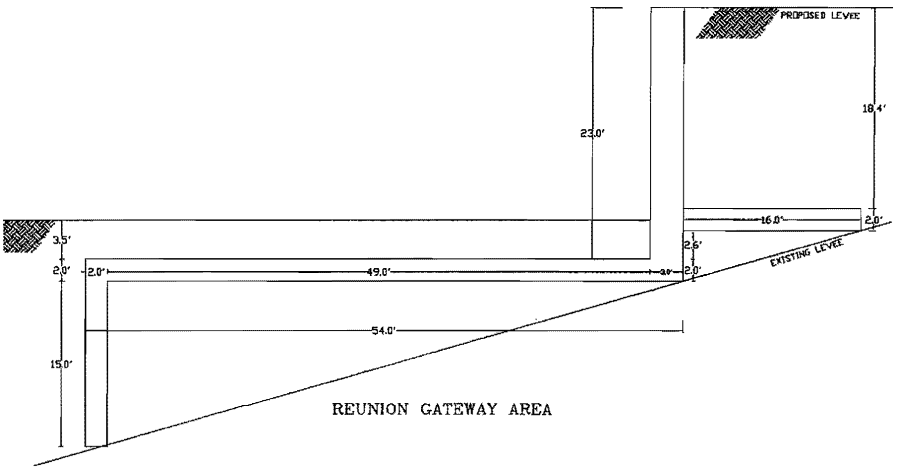

Cont. Figure 4: Retaining Wall Cross Sections Presented In the 11/3/2006 Meeting

Terracon
Consulting Engineers & Scientists

Terracon Consultants, Inc.
8901 Carpenter Freeway, Suite 100
Dallas, Texas 75247
Phone 214.630.1010
Fax 214.630.7070
www.terracon.com

December 15, 2006

Mr. Stan R. Caldwell, P.E.
Vice President
Halff Associates, Inc.
8616 Northwest Plaza Drive
Dallas, TX 75225-4292

Phn: 214-346-6280
Fax: 214-739-0095

Re: Geotechnical Engineering Report
Preliminary Flood Wall Stability Analyses
Trinity Parkway Project
Dallas, Texas
Terracon Project No. 94065322

Dear Mr. Caldwell:

This report presents our geotechnical recommendations and analyses for preliminary evaluation of retaining walls abuting the Northeast Levee of the Trinity River. The work was completed in general accordance with our proposal dated September 11, 2006.

Project Information

Concrete retaining walls are envisioned to be required to allow construction of the Trinity Parkway where it crosses under a number of bridges. The walls will retain future levee fill that may be placed to raise the existing levees. The wall heights may range from less than 4 feet to 25 feet. The walls will be constructed on new roadway embankment fill. The roadway embankment fill may range from 5 to 10 feet thick. The top of the wall may be below the 100-year flood elevation. The levee will be raised with 4 Horizontal to 1 Vertical (4H:1V) slopes extending from the retaining walls to the crest of the levee.

Three U.S. Army Corps of Engineers engineering manuals were used to develop preliminary geotechnical recommendations for design of cast-in-place concrete retaining walls. These manuals are listed below:

- Retaining and Flood Walls, EM 1110-2-2502, September 29, 1989.
- Design and Construction of Levees, EM 1110-2-1913, April 30, 2000.
- Slope Stability, EM 1110-2-1902, October 31, 2003.

The scope of this study is limited to providing preliminary wall design parameters and estimating the global stability of the levee retaining wall to investigate the feasibility of levee retaining walls.

Expected Subsurface Conditions

Boring and Laboratory Data

Lateral earth pressures and global stability analyses for retaining wall design were based on soils data obtained from the Army Corps of Engineers. The Corps of Engineers drilled five borings at the levee crest and toe of the Northeast Levee. The approximate locations of the borings designated 8A4C-629, 84AC-630, 8A2S-631, 8A4C-632, and 8A2S-633 are shown on Figure 1. The results of laboratory tests performed by the Corps of Engineers are presented on Figures 2 through 5. Test results include soil natural moisture contents, Atterberg Limits, dry density, undrained compressive strength, and drained direct shear strength. The variations in soil Liquid Limits and Plasticity Indices (PI) are shown on Figure 6.

Subsurface Conditions

The Corps of Engineers borings indicate that high plasticity clays are present in the levee. The levee clays had Liquid Limits ranging from 55 to 88 percent with PI's ranging from 36 to 62. The average Liquid Limit was 74 percent and the average PI was 51. Strength tests indicate the clays have a very stiff to hard consistency below the crest of the levee.

The clays below the levee to depths on the order of 20 feet below the toe of the levee consisted of high plasticity clays. These foundation clays exhibited Liquid Limits ranging from 50 to 91 percent and PI's ranging from 32 to 65. The average Liquid Limit was 72 and average PI was 49. These clays exhibited a stiff to very stiff consistency.

Lean clays with moderate plasticity and silty to clayey sands underlay the highly plastic natural clays. The lean clays exhibited Liquid Limits ranging from 23 to 43 percent and PI's ranging from 6 to 25. The consistency of the lean clays ranged from medium stiff to stiff.

The Trinity River soil deposits are underlain by shale of the Eagle Ford Formation. The shale was present at depths ranging from 40 to 60 feet below the toe of the levee.

Design Soil Strengths

Soil strengths for lateral earth pressure and global stability analyses were based on Corps of Engineer empirical correlations between effective friction angles and PI. The variation of effective friction angle and soil PI is shown on Figure 7. Direct shear measured values from soil samples obtained from the Northeast Levee are also shown on this plot. The range of effective cohesion values for the Northeast Levee soils are presented on Figure 8.

The soils placed behind the retaining walls to construct the levee to 4H:1V slopes and the roadway fill soils were assumed limited to clays with a PI of 35 or less. For a PI of 35, a design effective angle of friction of 24 degrees was selected from Figure 7.

A design PI of 50 was used to select design values for the levee, foundation, and Trinity Parkway roadway embankment soils. A PI of 50 represents an average value of the tests

performed by the Corps of Engineer. Based on Figure 7, a design effective friction angle of 20 degrees was selected for design. A cohesion value of 50 psf was assigned to the existing levee fill. A cohesion value of 200 psf was assigned to the foundation soils. These cohesion values are lower bounds to the values measured by the Corps of Engineers as can be observed on Figure 8.

The average total unit weight of the levee and foundation soils is about 122 pcf. A design soil total unit weight of 125 pcf is recommended for design.

Lateral Earth Pressures

The Corps of Engineers' Retaining Wall and Flood Wall manual specifies that at-rest earth pressures be used for design. The at-rest earth pressures were computed based on Jaky's relationship for a level back fill and drained conditions. Sliding wedge analyses were performed to calculate at-rest coefficients for undrained conditions and a level back slope. Sliding wedge analyses were used to compute the at-rest earth forces for a sloping wall backfill. A Strength Mobilization Factor of 2/3 was used with a soil friction angle of 24 degrees to compute the at-rest soil forces for a sloping backfill. Recommended lateral earth pressures for preliminary proportioning of the retaining walls are presented in Table 1.

TABLE 1 – AT-REST LATERAL EARTH PRESSURE COEFFICIENTS

Wall Backfill Slope	At-Rest Pressure Coefficient Drained Conditions	At-Rest Pressure Coefficient Undrained Conditions
4H:1V	0.72	1.0
Level	0.59	0.77

Bearing Resistance

The retaining walls will be supported on roadway embankment fill. The fill was assumed to consist of clays with a PI of 35 or less. An undrained shear strength of 1,000 psf was used for bearing capacity design calculations. Experience indicates that this shear strength is typical of clays placed wet of optimum by 2 to 3 percentage points.

An allowable net bearing pressure of 1,700 psf is recommended for preliminary design of the retaining wall foundation. This allowable bearing pressure includes a factor of safety of 3.

Sliding Resistance

The sliding resistance of the wall will be mobilized by shearing resistance along the base of the wall and passive resistance in front of the key wall. An ultimate coefficient of sliding resistance of 0.36 is recommended along the base of the wall on the retained earth side of the wall key.

Terracon

Passive resistance was computed using log spiral solutions by Shields and Tolunay for level ground in front of the retaining wall key wall. The passive resistance was computed assuming no wall soil friction and a soil effective friction angle of 24 degrees. A passive coefficient of 2.3 was obtained from the Shield and Tolunay chart. A passive coefficient of 1.15 is recommended for design to meet the requirements given in the Corps of Engineers Retaining and Flood Wall manual. The manual does not recommend using a passive coefficient greater than ½ half of the computed passive coefficient. Buoyant soil unit weights should be used in the sliding stability analyses. The wall should have a factor of safety of at least 1.5 with respect to sliding.

Global Stability Analyses

Global stability analyses were performed for a 9 foot high retaining wall near the Woodall Rogers Bridge and for a 27.5 foot high wall planned for the Overlook. The wall geometry, soil strengths, and groundwater conditions used for the stability analyses are shown on Figures 9 and 10.

The slope stability analyses were performed using the slope stability analysis program Slide developed by Rocscience. The shearing surfaces with the lowest computed factor of safety using Spencer's method are shown on Figures 9 and 10. The computed factors of safety are greater than 1.5, which is the minimum acceptable factor of safety. These analyses indicate that the retaining walls would have an adequate factor of safety with respect to global stability.

General Comments

The recommended soil design values and global stability analyses are preliminary and intended to allow the feasibility of the retaining walls to be accessed. These recommendations should not be used for final design of the retaining walls. Borings, laboratory tests, and engineering analyses should be performed to develop final wall design recommendations.

Closure

If there are any questions, please contact us.

Sincerely,

Terracon Consultants, Inc.

Ranasinghege (Jay) Jayatilaka, Ph.D., P.E.
Project Manager

Tim G. Abrams, P.E.
Manager, Geotechnical Services

STATE OF TEXAS
TIM G. ABRAMS
40223
REGISTERED PROFESSIONAL ENGINEER

FIGURES

Figures

Corps of Engineers Boring Locations---------- 1
Corps of Engineers Laboratory Test Results ---------- 2 to 5
Liquid Limits Versus Plasticity Indices---------- 6
Effective Friction Angle Correlations---------- 7
Effective Cohesion Correlations ---------- 8
Global Stability Analyses of Wall Near Woodall Rogers ---------- 9
Global Stability Analyses Overlook Wall ---------- 10

Terracon

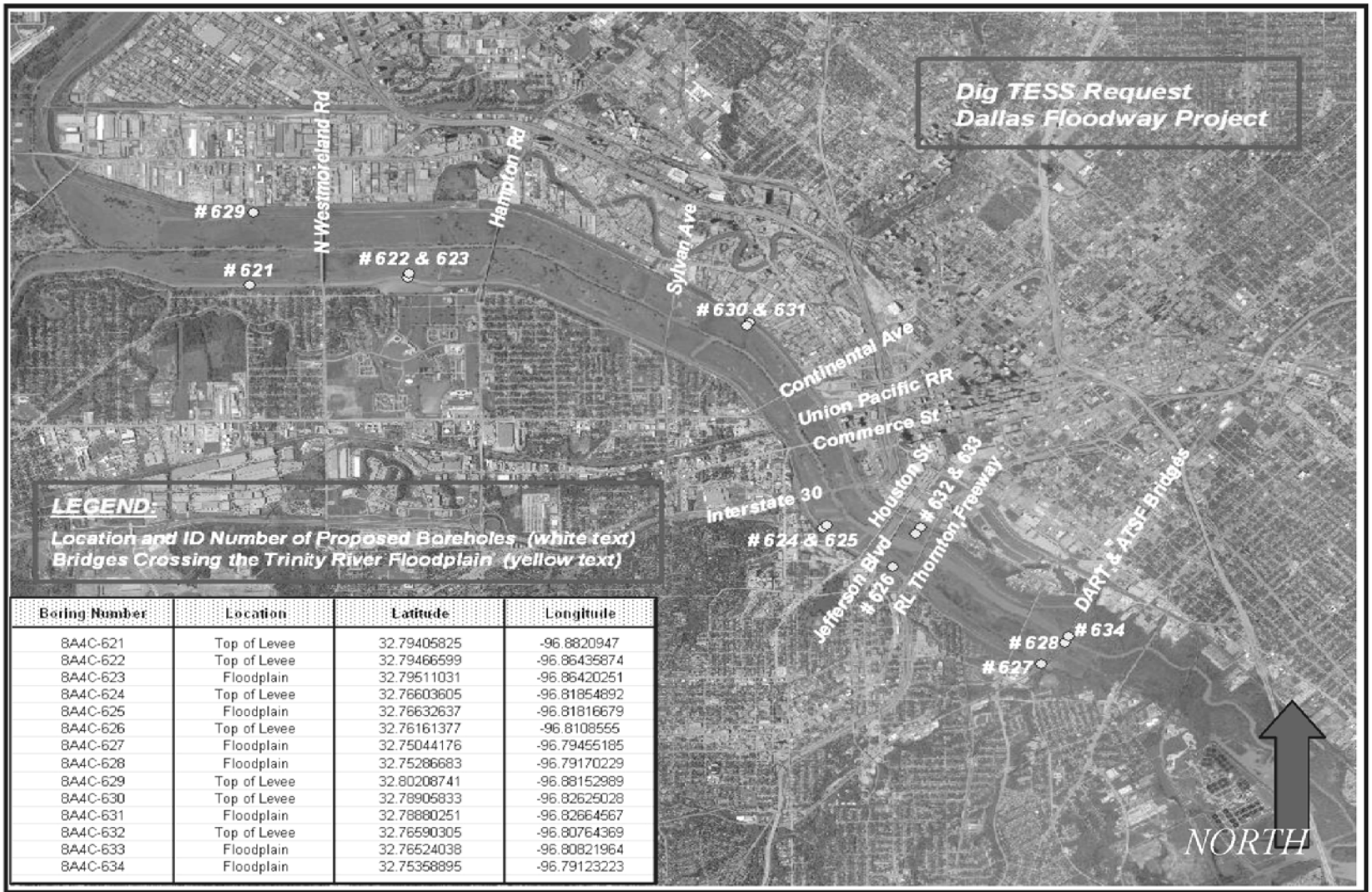

Boring Number	Location	Latitude	Longitude
8A4C-621	Top of Levee	32.79405825	-96.8820947
8A4C-622	Top of Levee	32.79466599	-96.86435874
8A4C-623	Floodplain	32.79511031	-96.86420251
8A4C-624	Top of Levee	32.76603605	-96.81854892
8A4C-625	Floodplain	32.76632637	-96.81816679
8A4C-626	Top of Levee	32.76161377	-96.8108555
8A4C-627	Floodplain	32.75044176	-96.79455185
8A4C-628	Floodplain	32.75286683	-96.79170229
8A4C-629	Top of Levee	32.80208741	-96.88152989
8A4C-630	Top of Levee	32.78905833	-96.82625028
8A4C-631	Floodplain	32.78880251	-96.82664567
8A4C-632	Top of Levee	32.76590305	-96.80764369
8A4C-633	Floodplain	32.76524038	-96.80821964
8A4C-634	Floodplain	32.75358895	-96.79123223

CORPS OF ENGINEERS BORING LOCATIONS
TRINITY PARKWAY LEVEE
DALLAS, TEXAS

Terracon

Terracon Job No. 94065322

FIGURE 1

NORTHEAST LEVEE										
Sample Depth (feet)	Material Type	Natural Moisture Content (W_c)	Atterberg Limits			Dry Density (pcf)	Undrained Strength		Drained Strength (Direct Shear)	
			LL	PL	PI		Q (tsf)	Strain at Failure (%)	c' (tsf)	ϕ'
Borehole 8A4C-629, Approximate Station 372± (Levee Crest, near centerline)										
2 - 4	CH	23.7	71	24	47	-----	-----	-----	-----	-----
7 - 9	CH	23.5	74	22	52	-----	-----	-----	-----	-----
12 - 14	CH	18.2	65	22	43	108.3	6.931	2	-----	-----
17 - 19	CH	22.8	85	26	59	99	8.656	2.2	0.1	20.1
25 - 27	CH	24.5	88	26	62	-----	-----	-----	-----	-----
35 - 37	CH	22	79	22	57	102.8	6.56	8.5	0.52	11.7
45 - 47	CH	28.1	67	21	46	94.6	1.758	4.4	0	20.1
55 - 57	CL-CH	24.2	50	18	32	99.1	1.778	5.5	0.19	18.5
65 - 67	SM	18.7	Non-Plastic			106.4	6.166	4.5	0	35.3
75 - 77	SM	7.1	-----	-----		-----	-----	-----	-----	-----
80 - 82	Shale	18	68	34	34	-----	-----	-----	-----	-----
82 - 88.5	Shale	14.7	78	36	42	113.4	22.15	1.3	-----	-----
88.5 - 93.4	Shale	21.5	72	32	40	105.4	14.89	0.9	-----	-----

Table 1A. Northeast Levee - Summary of Test Results, Embankment and Foundation Materials [USACE, 2004]

FIGURE 2

Sample Depth (feet)	Material Type	Natural Moisture Content (W_c)	Atterberg Limits			Dry Density (pcf)	Undrained Strength		Drained Strength (Direct Shear)	
			LL	PL	PI		Q (tsf)	Strain at Failure (%)	c' (tsf)	ϕ'
Borehole 8A4C-630, Approximate Station 196± (Levee Crest, near centerline)										
2 - 4	CH	20.3	----	----		-----	-----	-----	-----	-----
7 - 9	CH	19.4	75	25	50	-----	-----	-----	-----	-----
12 - 14	CH	22.7	71	23	48	103.9	3.592	5.1	-----	-----
17 - 19	CH	22.7	81	23	58	-----	-----	-----	-----	-----
25 - 27	CH	24.5	78	25	53	-----	-----	-----	-----	-----
35 - 37	CH	29.9	86	23	63	90.4	3.105	3	0.08	17.1
45 - 47	CH	23.4	57	19	38	102	2.319	11.1	0.33	15.9
55 - 57	SM-SC	20.4	23	17	6	-----	-----	-----	-----	-----
65 - 67	Shale	20.3	60	26	34	102.9	-----	-----	-----	-----
67.25 - 71	Shale	18.1	63	24	39	108.5	11.48	3.2	-----	-----
78.5 - 79	Shale	-----	----	----		-----	-----	-----	-----	-----
Borehole 8A2S-631, Approximate Station 196± (Floodplain, near Levee Toe)										
2 - 4	CH	17.7	84	26	58	-----	-----	-----	-----	-----
7 - 9	CH	19.6	77	25	52	-----	-----	-----	-----	-----
12 - 14	CH	25.9	70	26	44	98.2	1.611	4.2	-----	-----
17 - 19	CH	21	68	22	46	-----	-----	-----	-----	-----
24 - 26	CL	16.7	33	14	19	-----	-----	-----	-----	-----
31 - 33	CL	19.6	26	14	12	-----	-----	-----	-----	-----
38 - 40	Shale	17.1	59	24	35	-----	-----	-----	-----	-----

Table 1B. Northeast Levee - Summary of Test Results, Embankment and Foundation Materials [USACE, 2004]

FIGURE 3

Sample Depth (feet)	Material Type	Natural Moisture Content (W_c)	Atterberg Limits			Dry Density (pcf)	Undrained Strength		Drained Strength (Direct Shear)	
			LL	PL	PI		Q (tsf)	Strain at Failure (%)	c' (tsf)	ϕ'
Borehole 8A4C-632, Approximate Station 92± (Levee Crest, near centerline)										
2 - 4	Shale	16.6	69	22	47	-----	-----	-----	-----	-----
7 - 9	CH	18.2	72	22	50	-----	-----	-----	-----	-----
12 - 14	CH	17.9	55	19	36	112.9	4.648	15	-----	-----
17 - 19	CH	24.4	75	23	52	95.6	3.827	1.4	-----	-----
25 - 27	CH	28.9	80	26	54	90.9	3.376	4.5	0.38	15
35 - 37	CH	29.5	82	23	59	89.9	3.097	2.6	0	19.3
45 - 47	CH	26.6	63	21	42	95	2.973	6.6	0.09	19.5
55 - 57	CL	23.7	39	15	24	100.3	1.19	6.1	0.07	22.4
65 - 67	CL	23.9	35	16	19	101	0.597	2	-----	-----
85.6 - 87	Shale	19.2	68	28	40	109.1	12.46	4.6	-----	-----

Table 1C. Northeast Levee - Summary of Test Results, Embankment and Foundation Materials [USACE, 2004]

FIGURE 4

Sample Depth (feet)	Material Type	Natural Moisture Content (W_c)	Atterberg Limits			Dry Density (pcf)	Undrained Strength		Drained Strength (Direct Shear)	
			LL	PL	PI		Q (tsf)	Strain at Failure (%)	c' (tsf)	ϕ'
Borehole 8A2S-633, Approximate Station 92± (Floodplain, near Levee Toe)										
2 - 4	CH	22.7	68	22	46	-----	-----	-----	-----	-----
7 - 9	CH	34.1	91	26	65	-----	-----	-----	-----	-----
12 - 14	CH	30.2	67	21	46	93.3	0.961	3.2	-----	-----
17 - 18.6	CH	25.9	69	23	46	-----	-----	-----	-----	-----
24 - 25.6	CL	20.6	39	15	24	-----	-----	-----	-----	-----
31 - 33	CL	21.7	36	16	20	-----	-----	-----	-----	-----
38 - 40	CL	20.7	43	18	25	-----	-----	-----	-----	-----
43 - 43.6	SP-SM	20.3	Non-Plastic			-----	-----	-----	-----	-----
43.6 - 44.6	CL	20	38	18	20	-----	-----	-----	-----	-----
48 - 49.5	CL	10.9	43	19	24	-----	-----	-----	-----	-----
54 - 55.5	Shale	18.2	66	28		-----	-----	-----	-----	-----

Table 1D. Northeast Levee - Summary of Test Results, Embankment and Foundation Materials [USACE, 2004]

FIGURE 5

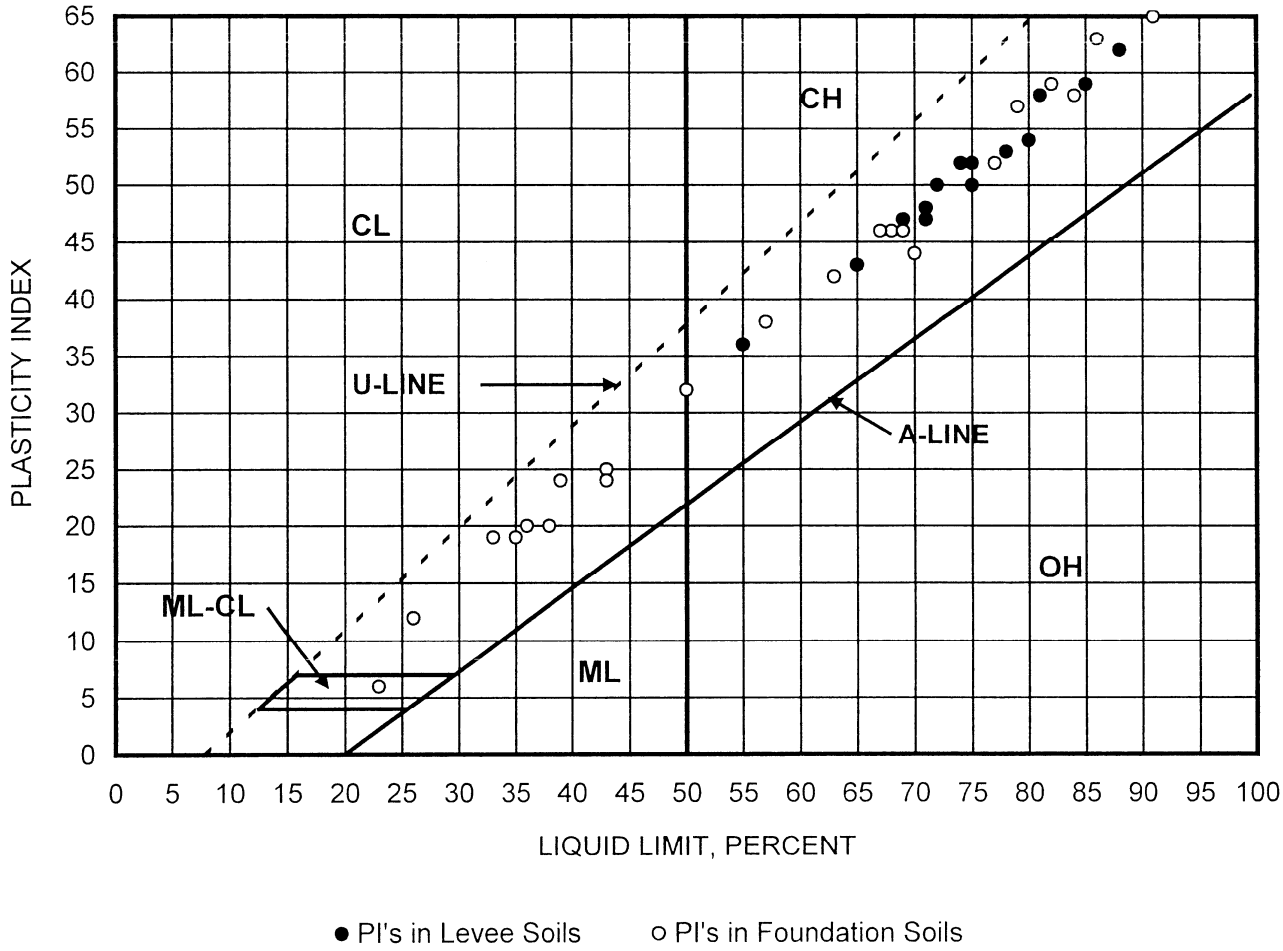

LIQUID LIMITS VS. PLASTICITY INDICES
NORTHEAST LEVEE OF TRINITY RIVER
DALLAS, TEXAS

Terracon
Terracon Job No. 94065322

FIGURE 6

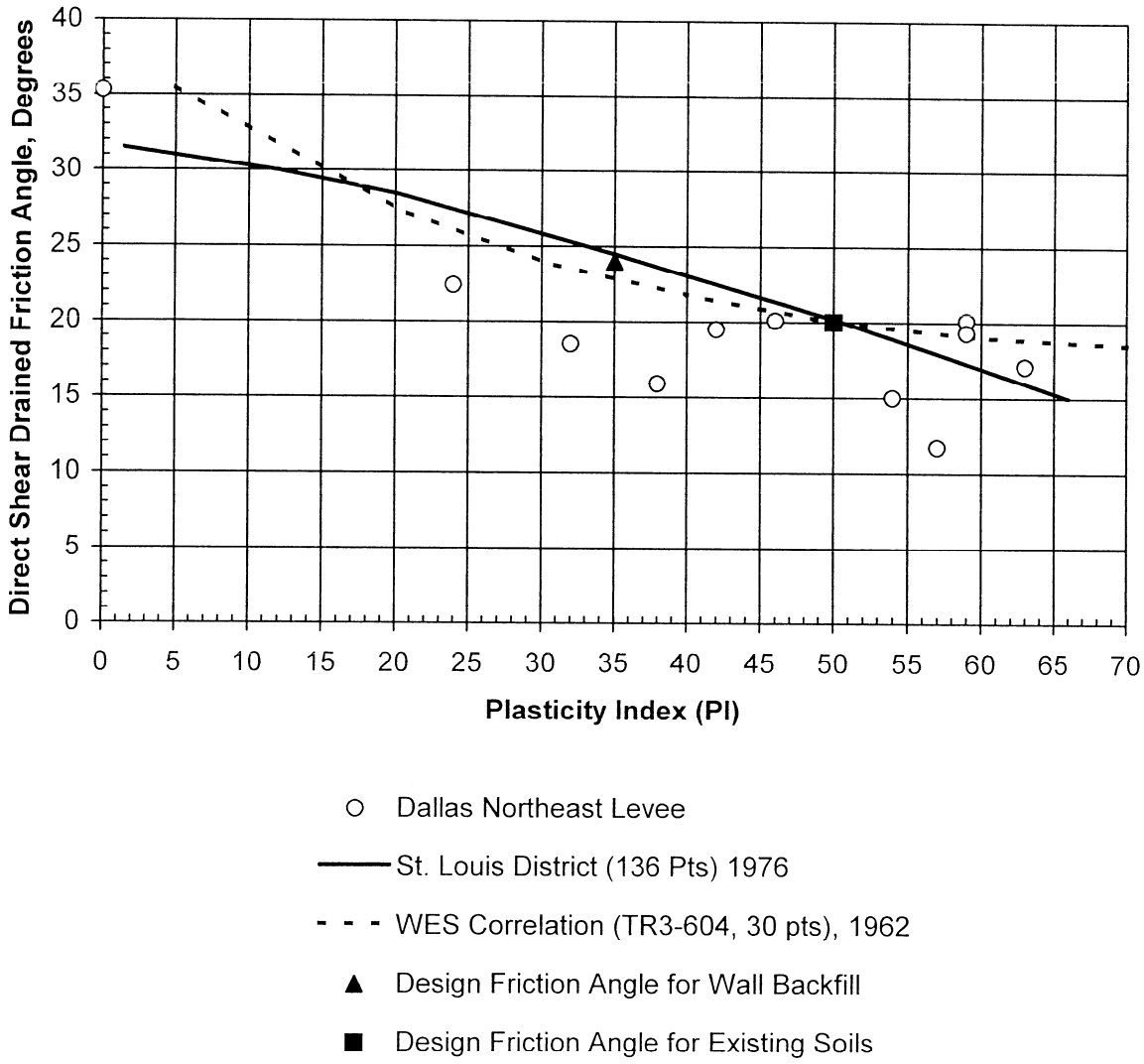

EFFECTIVE FRICTION ANGLE CORRELATIONS
TRINITY PARKWAY NORTHEAST LEVEE
DALLAS, TEXAS

Terracon
Terracon Job No. 94065322

FIGURE 7

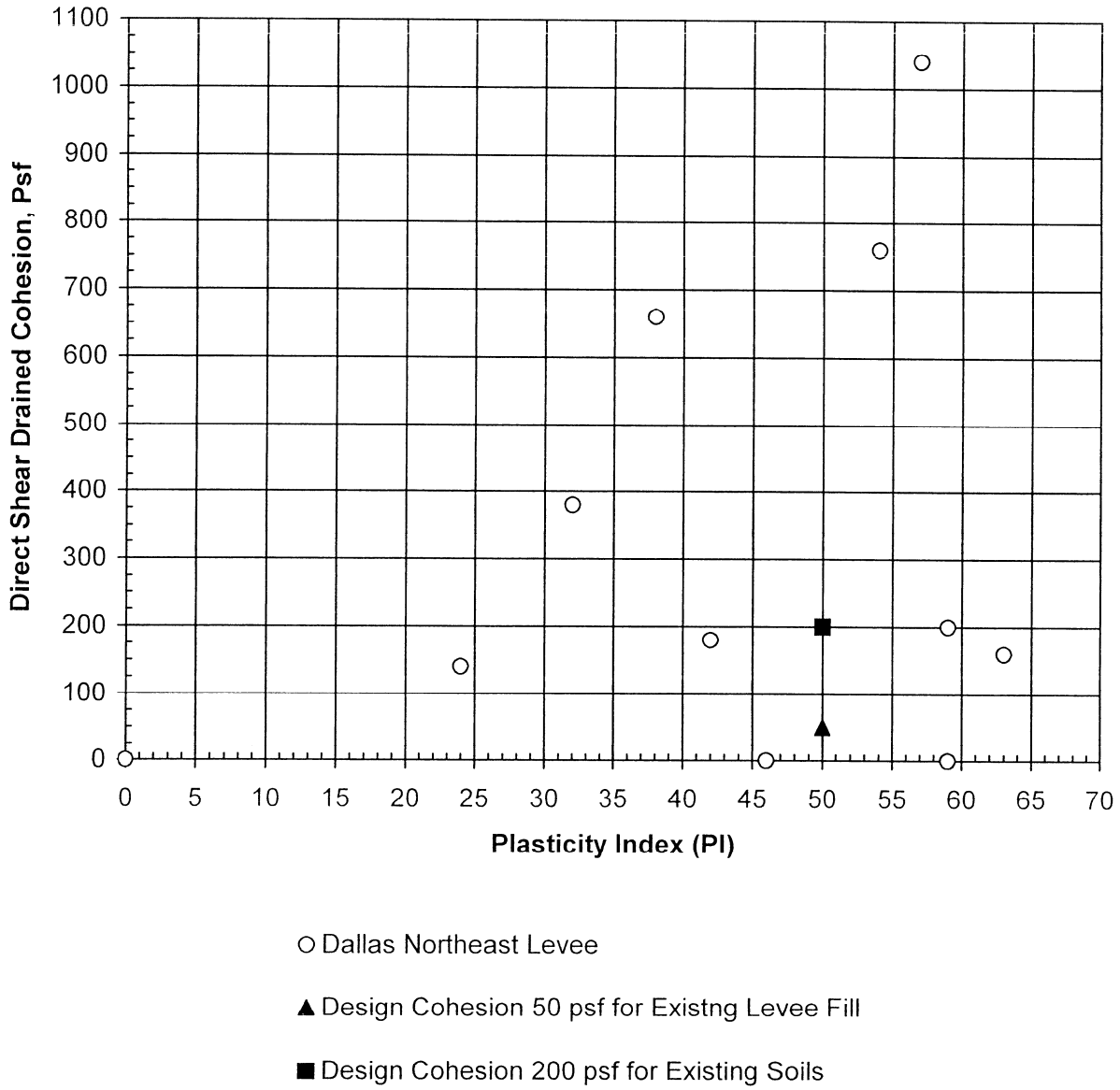

EFFECTIVE COHESION CORRELATIONS
TRINITY PARKWAY NORTHEAST LEVEE
DALLAS, TEXAS

Terracon

Terracon Job No. 94065322

FIGURE 8

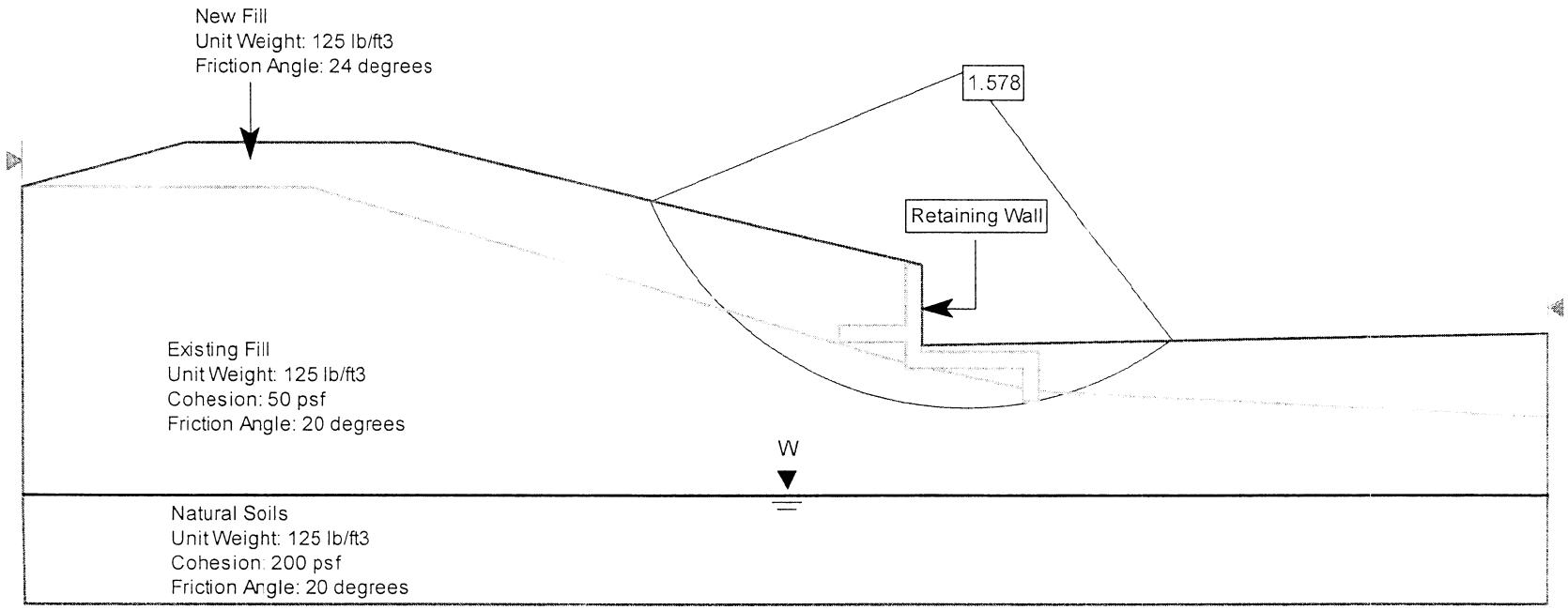

Terracon

Project No. 94065322

GLOBAL STABILITY ANALYSIS OF WALL NEAR WOODALL ROGERS
TRINITY PARKWAY PROJECT
DALLAS, TEXAS

FIGURE 9

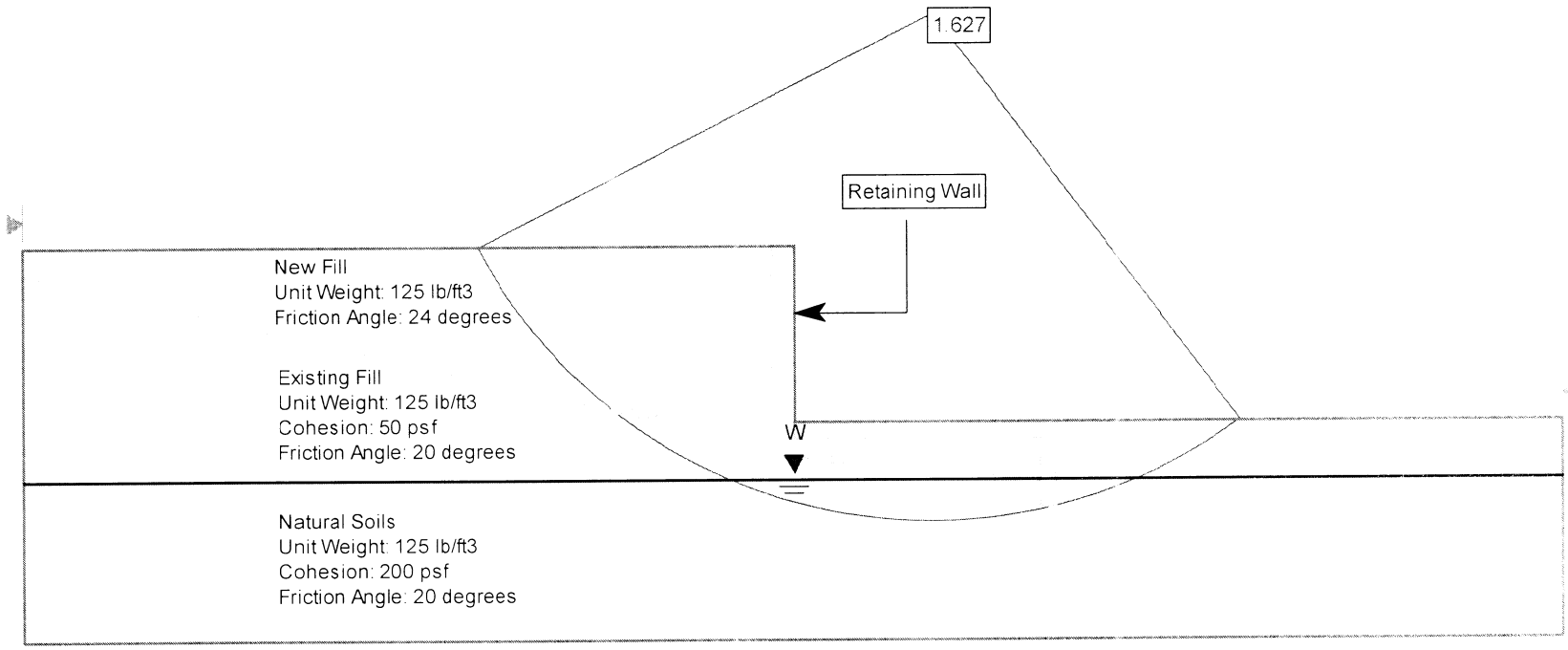

Terracon

Project No. 94065322

GLOBAL STABILITY ANALYSIS OVERLOOK WALL
TRINITY PARKWAY PROJECT
DALLAS, TEXAS

FIGURE 10

Appendix H-2

Geotechnical Workgroup Documentation

THIS PAGE INTENTIONALLY LEFT BLANK

Halff Associates

8609 Northwest Plaza Drive
Dallas, Texas 75225-4292
(214) 346-6200
Fax (214) 273-1307

MEMORANDUM 2.1

TO:	Mr. Christopher Anderson Planning Director North Texas Tollway Authority	**DATE:**	5/4/07 Revised 7/26/07
		AVO:	17826/WO25
FROM:	Conrad Harrison/ Matt Craig / Todd Milburn *Email:* charrison@halff.com	**PROJECT:**	Trinity Parkway SDEIS

SUBJECT: Preliminary Estimation of Soil Usability within the Dallas Floodway

USACE & NTTA ISSUE: Suitability of Floodway Material for Levee Raise and Roadway Embankment

---

This letter report is prepared in partial response to Comment #2 "Borrow Areas" of the USACE Feb 16, 2007 commentary on the draft Schematic of Trinity Parkway Alt. 3C. The report has been prepared for NTTA by Halff Associates, Inc. and Halff's geotechnical subconsultant, Terracon, Inc.

Study Purpose:

Trinity Parkway Alternatives 3A, 3B, 3C, 4A and 4B, located within the Dallas Floodway, are expected to be constructed on embankments built using material borrowed from proposed lakes and river channel meanders shown in the City of Dallas Balanced Vision Plan. The lake and channel excavation is additionally expected to provide sufficient impervious material for expanding and raising the Floodway levees, a flood damage reduction action proposed by the City and USACE. USACE Comment #2 primarily questions that sufficient suitable material exists in the Floodway to meet the needs of the roadway embankments and levee expansions. The purpose of this study is to provide a preliminary characterization of soil materials in the borrow sites to address this concern.

Geotechnical Data Collection:

This report is based on geotechnical data for available soil borings and exploratory trenches in the Dallas Floodway. The study team has collected, compiled, and catalogued all known reports from public works projects in the Floodway, such as bridges, sewer lines, transmission lines and archaeological studies. The following is the list of collected reports. All the referenced reports are on file at Halff:

- Archaeological Testing for the Trinity Parkway, AR Consultants, Inc. (2006)
- Dallas Trinity River In-Stream Whitewater Park Hydraulic Design – City of Dallas (2007)
- Closure Plan Municipal Sludge Disposal Lagoon E - Halff Associates (1993)
- Closure Plan Municipal Sludge Disposal Lagoon D - Halff Associates (1993)
- Geotechnical Report: Woodall Rodgers Bridge - Terra-Mar, Inc. (2004)
- Geotechnical Report for DWU Cadiz PS Wastewater Pipeline Improvement (2003)
- Upper Trinity Feasibility Project- USACE (Gilles Engineering) (2004)

8609 Northwest Plaza Drive
Dallas, Texas 75225-4292
(214) 346-6200
Fax (214) 273-1307

- Project Report on Dallas Floodway: Volume III – Pavaho Street Pumping Plant – USACE (1952)
- Project Report on Dallas Floodway: Volume IV – Pumping Plant B – USACE (1953)
- Project Report on Dallas Floodway: Volume VI – Pumping Plant C– USACE (1954)
- Project Report on Dallas Floodway: Volume V – Floodway Improvements – USACE (1955)
- Dallas Floodway Extension: General Reevaluation Report and Integrated EIS - USACE (1998)
- Westmoreland Bridge Boring Logs - TETCO (1980)
- Geotechnical Investigation: DWU West Bank Interceptor (1991)
- Preliminary Flood Wall Stability Analyses: Trinity Parkway - Terracon (2006)
- Investigations of the Santa Fe Trestle Trail Borrow Pit – Lopez Garcia (2007)
- DART Light Rail Starter Line/Alignment OC-2 – Terra-Mar (1991)
- DART SOC Line: Trinity River Crossing - Mason-Johnson & Assocs. (1987)
- DWU 120-Inch Interceptor - Rone Engineers (1995)
- Westmoreland Street Bridge Approaches - TEAM Consultants (1999)
- Geotechnical Exploration on Santa Fe Trestle Trail - ALPHA Testing (2006)
- Hampton Road: Trinity River Bridge –TxDOT (2004)
- Dallas Floodway Levee: Sediment Sampling - Maxim Technologies (1995)
- Westmoreland Bridge Profile at North and South Levees – Dallas County Public Works
- IH-30 Bridge Widening Over Trinity River - MTE, Inc. (2005)
- Geotech and Environ Investigation: Trinity River Implementation Plan – Terra-Mar (1999)

The study team collected a total of 407 usable soil borings and trenches from the listed reports. Each boring and trench site was located in ARCGIS using the UTM 1983 14N coordinate system, and was plotted on an orthophotograph of the study corridor. **(See Map 1)** The bore log and trench descriptions were provided to Terracon for input into gINT (a geotechnical integrator program) to create a formatted database allowing geotechnical review.

Aerial Photograph Review:

The Floodway area is known to be heavily disturbed over the last century by activities such as gravel mining and filling. Based on anecdotal reports in the corridor, there are areas affected by burial of waste materials, as well as some clean fills apparently generated from excess spoils from downtown building sites. Other areas have been filled and leveled using on-site materials as part of Floodway improvement projects. To ascertain the affected areas, the study team obtained and mapped features from aerial photographs and other applicable reports in the study corridor from 1929 to present. The following resources were reviewed:

- Aerial Photographs from 1929 to present, Metropolitan Aerial Surveys.
- USACE reports from 1952 to 1955 regarding the levee strengthening.
- Closure Plans Lagoons D and E at the Central Wastewater Treatment Plant, Halff Associates.
- A Bureau of Economic Geology report titled "Mineral Lands in the City of Dallas."

Based on the collected information, outlines of former gravel mining sites, borrow areas, fill areas, and other disturbed sites were transferred into the ARCGIS system. The resulting map is shown in **Map 2.**

8609 Northwest Plaza Drive
Dallas, Texas 75225-4292
(214) 346-6200
Fax (214) 273-1307

This information is useful in determining the horizontal extents of fill materials encountered in specific boreholes.

Borrow Sites:

On May 10, 2005, NTTA provided USACE with a letter showing draft locations of borrow sites and associated mitigation areas associated with the Trinity Parkway Floodway routes (Alts 3A, 3B and 4.) NTTA's intent at the time was to excavate approximately five to six million cubic yards of material from proposed lakes and channels associated with the 2004 Dallas Balanced Vision Plan. (BVP) The current letter report is based on essentially the same locations, except the road embankments and lake and channel outlines have been shifted somewhat as a result of USACE consultation in 2006-2007, and the associated development of Trinity Parkway Alternative 3C.

This letter report is also based on an updated (Feb 20, 2007) version of the Balanced Vision Plan provided by the City of Dallas. The lake and channel outlines in this Plan were input into ARCGIS (see Map 3) to allow calculation of borrow volumes. Seven proposed borrow areas are separately analyzed in this report:

1. Wetlands Cell – Proposed east overbank cell between Hampton and Westmoreland Roads
2. West Dallas Lake - Proposed west overbank lake, upstream of Hampton Road
3. Urban Lake – Proposed 82 acre lake near downtown Dallas
4. Natural Lake - Proposed 58 acre lake south of downtown Dallas
5. Upper-Reach Meander - Relocation of river channel (U/S of Westmoreland)
6. Middle-Reach Meander - Relocation of river channel (U/S of Continental to Hampton)
7. Lower-Reach Meander - Relocation of the Trinity River channel (DART to U/S of Continental)

On July 2, 2007 NTTA, USACE, FHWA and the City of Dallas reached an Interagency Agreement that for permitting purposes and to show project independent utility the borrow sites for the Trinity Parkway fill would be confined to the wetland cells and the dry lake excavation of the West Dallas, Urban and Natural Lakes. Additional borrow material from the lakes, wetland cells, river channel meanders and areas outside the Trinity Parkway Project will be used for the improvements to the levees and the proposed Trinity Floodway Park Project.

Soil Characterization:

USACE has indicated that impermeable clay materials, identified as either "CH" or "CL" in the Unified Soil Classification System, would be acceptable as levee fill material. Other materials would not be acceptable. To aid in characterizing the available material from the borrow sites, the detailed soil strata information from the available borings was simplified into four designations as follows. Guidance was provided by Terracon in applying these designations to the material logged in the available soil borings:

1. Levee-Usable Material – CH and CL clays suitable for levee expansions.
2. Roadway-Usable Material – materials suitable for roadway embankments, such as soils with clay (that were not CH or CL), silt, sand, gravel, limestone, and shale.

8609 Northwest Plaza Drive
Dallas, Texas 75225-4292
(214) 346-6200
Fax (214) 273-1307

3. Unusable Material – Materials judged unsuitable for either levee or road fill, such as construction debris, metal-containing fill, or miscellaneous trash.
4. Unknown Material – This designation was typically applied to locations where the adjacent bore-log data was not deep enough to provide information. Also, in one case, this designation was applied to a specific log that only listed "fill".

Borrow Site Characterization:

Appendix A contains detailed information for each of the seven borrow sites listed above. This includes a site map of each site, cross-sections showing the bore-logs in the area, and calculations of the expected volumes of soil by type. The bore-logs have been simplified into the four soil designations shown under "Soil Characterization" above. Where applicable, borrow sites were broken into sub-areas assumed to have similar underlying soil characteristics. Generally break lines were drawn at expected discontinuities in the soil strata, such as the edges of historic fill sites or at physical boundaries such as the river channels. Where adjacent borings showed significantly different materials (such as a sand lens) that did not correlate with historic data, a break line was drawn generally half way in between the borings to approximate the extent of the different zones. Within each sub-area, the expected material is broken up into percentages of levee-usable, roadway-usable, unusable and unknown based on visual inspection of the applicable bore-logs.

It was determined during workgroup meetings between NTTA, USACE, FHWA and the City of Dallas that additional soil borings would be taken in areas of the Trinity Floodway where no or insufficient data was currently available (see Memorandum 2.1a). Terracon was contracted to conduct a total of 29 borings to supplement the existing data to further clarify the borrow site characterizations and assist in identifying areas for potential seepage under the levees. (See Terracon Proposal and Additional Borings Map attached.) As of this writing, borings X-1 through X-5 (see attached bore logs) have been completed and additional work has been postponed due to weather.

Required Fill Volumes

An estimate of the required fill volume for Alt 3C has been prepared to guide the determination of the borrow volume. Halff has prepared GEOPAK sections of the east and west levee improvements in the Floodway, as well as the roadway embankment for Alt 3C. To generate the levee geometry, Halff has assumed all the affected levees are raised to Standard Project Flood (SPF) plus 3.0 feet, the top levee widths are increased to 20-feet, and the levee slopes are thickened towards the river using 4:1 side slopes. The levee improvements are all assumed to be built with CL or CH clay. In addition, USACE has requested in locations where the tollway embankment is adjacent to the levee, an additional zone of CL or CH clay be placed above the new levee toe. (See section on next page.)

8609 Northwest Plaza Drive
Dallas, Texas 75225-4292
(214) 346-6200
Fax (214) 273-1307

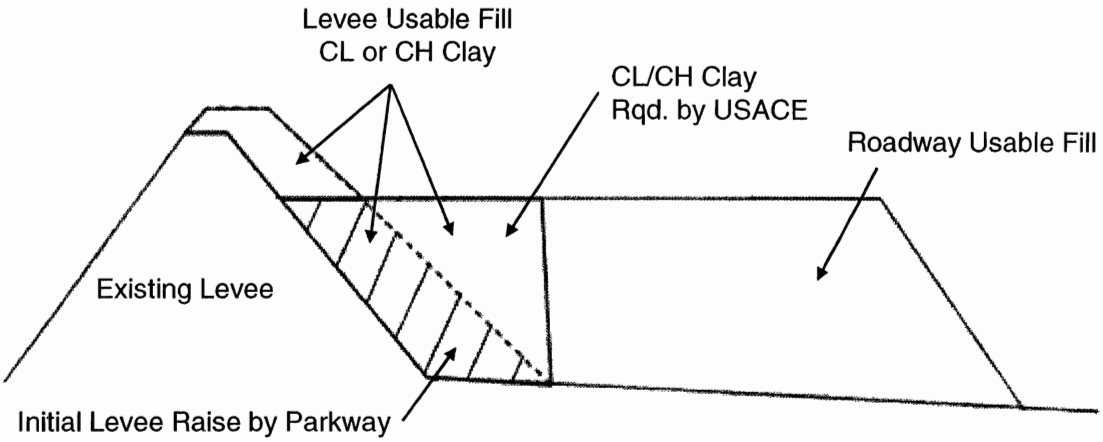

Based on these assumptions, the following is the calculated volume of fill (excluding shrinkage) in the Floodway segment from the DART Bridge to the Elm Fork/West Fork Confluence of the Trinity River.

Item	Levee Usable Fill (CY)	Roadway Embankment Fill (CY)
East Levee Raise and Sideslopes (Hampton to DART)	1.13 Million	0.00 Million
Extra Fill over East Levee Toe	1.00 Million	-1.00 Million
Alt 3C Roadway Embankment	0.00 Million	3.41 Million
West Levee Raise and Sideslopes (Hampton to DART)	0.84 Million	0.0 Million
Levee Raise and Sideslopes (Upstream of Hampton - Approx – Prorated to River Confluence)	1.30 Million	0.0 Million
Totals	**4.27 Million**	**2.41 Million**

Assuming a 10% shrinkage allowance, the target required borrow volume is therefore estimated to be:

- Levee Usable Fill: 4.27 million CY plus 10% = 4.70 million CY
- Roadway Embankment Fill: 2.41 million CY plus 10% = 2.65 million CY
- **Total Fill: = 7.35 million CY**

Since Memo 2.1, 2.1a and 2.1b the following adjustments have been made to the proposed Trinity Parkway Alignment 3C. The embankment along the proposed flood wall of the Trinity Parkway from Continental to Corinth Streets has been removed and the north bound ramps to Jefferson and from Houston streets have been placed on structure eliminating the high retaining walls and reducing the required amount of borrow material needed. The profiles of the north bound and south bound main lanes

8609 Northwest Plaza Drive
Dallas, Texas 75225-4292
(214) 346-6200
Fax (214) 273-1307

were refined to reduce the amount of borrow material needed. The estimate for total fill required by project is described in the table below.

Project	Levee Usable Fill	Roadway Usable Fill	Total Fill
Levee Raise Only (Confluence to DART)	3.60 Million CY	-	3.60 Million CY
Parkway Only (Hampton Rd to DART)	1.70 Million CY	2.65 Million CY	4.35 Million CY
Combined Projects (Confluence to DART)	4.70 Million CY	2.65 Million CY	7.35 Million CY
Levee Raise After Parkway (Confluence to DART)	3.00 Million CY	-	3.00 Million CY
Parkway After Levee Raise (Hampton Rd to DART)	1.10 Million CY	2.65 Million CY	3.75 Million CY

Borrow Site Volumes:

The initial analysis for borrow volumes excavated within the Trinity Floodway were calculated assuming all lakes, wetlands and river channel meanders would be available for use as borrow sites. Since each project shall be able to show Independent Utility and to simplify the permitting process an Interagency agreement was reached. In this agreement, the borrow material for the Trinity Parkway project would only be excavated from the wetland cells, the West Dallas Lake, and the Natural and Urban Lakes. The fill material needed for the levee improvements and Trinity Park improvements are to be taken from the Trinity River channel relocation and other areas.

A Geopak model was generated for the Natural and Urban Lakes based on design plans provided by the City of Dallas. Geopak models were also developed for a modified West Dallas Lake and the Hampton Wetland cells. The West Dallas Lake was redesigned to increase the volume of borrow material by increasing the surface area and depth. The banks of the new West Dallas Lake design were held 200 feet from the toe of the existing west levee and 200 feet from the bank of the existing Trinity River channel. The base of the West Dallas Lake was modeled to an elevation of 390, approximately 18 feet below the average existing ground surface. The Hampton Wetland cells are part of the Trinity Parkway wetland mitigation as proposed in the SDEIS and are modeled to a depth of at least 3 feet below the average existing ground surface for each wetland cell. These models were used to calculate a more accurate volume of borrow material for the earthwork balance.

The soil borings collected by Terracon were analyzed to more clearly define the soils types in the proposed borrow locations. Borings X3 and X4 showed CH / CL type clays to at least a depth of 30 feet. Boring X5 shows CH and CL clays to a depth of 23 feet where it became sand down to 30 feet. Boring X5 is in a location previously identified as unknown that is now classified as suitable for Levee Fill. Boring X-6 showed Levee Usable Fill to a depth of 17.5 feet and then Shale to a depth of 30 feet.

Halff Associates

8609 Northwest Plaza Drive
Dallas, Texas 75225-4292
(214) 346-6200
Fax (214) 273-1307

Borrow Site	Levee Usable Fill (CY)	Roadway Usable (CY)	Unusable Fill (CY)	Unknown Fill (CY)
1. Wetlands Cell	0.64 Million	0.00 Million	0.00 Million	0.01 Million
2. West Dallas Lake	2.62 Million	0.02 Million	0.00 Million	0.00 Million
3. Urban Lake	0.99 Million	0.38 Million	0.01 Million	0.02 Million
4. Natural Lake	0.38 Million	0.00 Million	0.03 Million	0.00 Million
Sub Total	**4.63 Million**	**0.40 Million**	**0.04 Million**	**0.03 Million**
5. Upper-Reach Meander	0.75 Million	0.00 Million	0.00 Million	0.00 Million
6. Middle-Reach Meander	0.16 Million	0.22 Million	0.00 Million	0.40 Million
7. Lower-Reach Meander	1.32 Million	0.74 Million	0.00 Million	0.01 Million
Sub Total	**2.23 Million**	**0.96 Million**	**0.00 Million**	**0.41 Million**
Totals	**6.86 Million**	**1.36 Million**	**0.03 Million**	**0.44 Million**

Initial Conclusions:

- The required fill volume in the Floodway (DART to Westmoreland) totals 7.35 million CY, comprised of 4.70 million CY of levee usable fill and 2.65 million CY of roadway usable fill.
- The assumed borrow sites for the Excavation Only Plan generate more than a sufficient amount of material for the roadway embankment.
- The assumed borrow sites generate sufficient material for the levee improvements, but fall short of all the needed roadway fill. The "Levee Usable" and "Roadway Usable" material totals 8.2 million CY, compared to the needed 8.0 million CY of levee and road embankments.
- The excess levee-usable material can be used in the roadway embankments. The study team needs to identify additional borrow sites or increase the depths of the current sites in order to make up the 2.9 million CY shortfall.
  As discussed at the May 7, 2007 meeting of the Geotech Work Group, the shortage of materials may be made up through enlargement of the West Dallas Lake, and potentially through reduction in the fill needed for the Trinity Parkway. The West Dallas Lake would need to be enlarged by approximately 150 acres (assuming a 12' depth).
- The May 10, 2005 NTTA letter to USACE anticipated an earthworks balance for Alt 3B. The current imbalance is largely due to the geometric changes made in Alt 3C to address USACE concerns, particularly the larger embankments near downtown due to the movement of the road towards the river. The 2005 letter also did not account for any west levee improvements or levee improvements upstream of Hampton Road.

THIS PAGE INTENTIONALLY LEFT BLANK

Halff Associates

8609 Northwest Plaza Drive
Dallas, Texas 75225-4292
(214) 346-6200
Fax (214) 273-1307

MEMORANDUM 2.1a

TO: Mr. Christopher Anderson
Planning Director
North Texas Tollway Authority

DATE: 5/23/07

AVO: 17826/WO25

FROM: Conrad Harrison
Email: charrison@halff.com

PROJECT: Trinity Parkway SDEIS

SUBJECT: Compilation of Bore Log and Trench Data in the Dallas Floodway

USACE & NTTA ISSUE: Suitability of Floodway Material for Levee Raise and Roadway Embankment

---

Additional geotechnical investigations for preparation of the Trinity Parkway Supplemental Draft Environmental Impact Statement (SDEIS) were recommended by the Trinity Parkway's Geotechnical Work Group during their May 18, 2007 meeting. This investigation would supplement the compilation of previous geotechnical investigations prepared for NTTA by Halff Associates, Inc. and Halff's geotechnical subconsultant, Terracon, Inc. The previous work was documented in Technical Memorandum 2.1 dated May 4, 2007 and distributed to the Geotech Work Group at their May 7, 2007 meeting.

Memorandum 2.1 documented a total of 407 usable soil borings and trenches from previous reports. Each boring and trench site was located in ARCGIS, and was plotted on an orthophotograph of the study corridor. The bore log and trench descriptions were compiled by Terracon into gINT (a geotechnical integrator program) to create a formatted database allowing geotechnical review. Electronic versions of the gINT database and .pdf versions of the bore logs were provided to the USACE at the May 18, 2007 meeting of the Geotech Group, with copies given to the City of Dallas on May 24, 2007.

To better characterize the soils within the excavation areas with limited information, an additional 15 borings are suggested to be taken, as shown on the attached map. These borings will be used to identify if the soils are suitable for levee embankment and/or roadway embankment. They will also be used to assist in identifying areas for potential seepage under the levees toward the excavated areas.

The City of Dallas' Lakes Design Team will also be undertaking additional geotechnical investigations. The locations have yet to be determined.

Note that this geotechnical investigation is only being undertaken for clarification of information to be used in the SDEIS. Further investigations will be performed for use in the Final EIS and design of the various features in the river corridor. The determination of the scope of those investigations is on-going.

Halff Associates

8609 Northwest Plaza Drive
Dallas, Texas 75225-4292
(214) 346-6200
Fax (214) 273-1307

MEMORANDUM 2.1b

TO: Mr. Christopher Anderson
Planning Director
North Texas Tollway Authority

DATE: 5/23/07

AVO: 17826/WO25

FROM: Conrad Harrison
Email: charrison@halff.com

PROJECT: Trinity Parkway SDEIS

SUBJECT: Compilation of Bore Log and Trench Data in the Dallas Floodway

USACE & NTTA ISSUE: Suitability of Floodway Material for Levee Raise and Roadway Embankment

---

A compilation of previous geotechnical investigations has been prepared for NTTA by Halff's geotechnical subconsultant, Terracon, Inc. This work was used for the preparation of Technical Memorandum 2.1 dated May 4, 2007 (attached) and distributed to the Geotech Work Group at their May 7, 2007 meeting.

Memorandum 2.1 documented a total of 407 usable soil borings and trenches from previous reports. Each boring and trench site was located by Halff in ARCGIS, and was plotted on an orthophotograph of the study corridor as shown in Maps 1 through 4. The bore log and trench descriptions were compiled by Terracon into gINT (a geotechnical integrator program) to create a formatted database allowing geotechnical review, per their March 23, 2007 agreement with Halff (attached). Electronic versions of the gINT database and .pdf versions of the bore logs were provided to the USACE at the May 18, 2007 meeting of the Geotech Group, with copies given to the City of Dallas on May 24, 2007.

Note that this geotechnical investigation was undertaken for clarification of information to be used in the SDEIS. Further investigations will be performed for use in the Final EIS and design of the various features in the river corridor. The determination of the scope of those investigations is on-going.

Halff Associates

8609 Northwest Plaza Drive
Dallas, Texas 75225-4292
(214) 346-6200
Fax (214) 273-1307

MEMORANDUM 3.1

TO: Mr. Christopher Anderson
Planning Director
North Texas Tollway Authority

DATE: 5/4/07 Revised 5/18/07

AVO: 17826/WO25

FROM: Matt Craig
Email: mcraig@halff.com

PROJECT: Trinity Parkway SDEIS

SUBJECT: Conceptual Design Regarding Trinity Parkway Crossings of the Dallas Floodway Levees

USACE ISSUE: Penetration or Alteration of USACE Project, Flood Fighting, O&M Access

---

The guidance regarding the development of the Trinity Parkway Alternative 3C was reiterated by the USACE on February 16, 2007. These comments addressed the February 1, 2007 preliminary draft of the Trinity Parkway Alt. 3C plan, profile and cross sections. The USACE asked for strict compliance to their guidelines, including:

1. No penetration of the levee
2. No excavations into the levee template
3. Maintain a minimum of 15 feet clearance between the levee and the lowest member of any structure passing over the levees
4. Maintain a minimum distance of 50 feet between the toe of the modified levee and any non-earthen structures

Alternative 3C requires that the existing levee be crossed at two locations and that the proposed Lamar levee extension be crossed at three locations. In an effort to meet the four criteria above, the NTTA developed an initial Trinity Parkway alignment alternative, designated Alt. 3C1, that spanned the entire levee (see attached strip map Tab 3.2). The following table shows the required span length for a bridge spanning over the entire levee with column lines 50 feet outside of the riverside and landside toes. This assumes a levee 35 ft. in height, a 20 ft. top width, and bridge skews as shown.

Bridge Skew (deg)	Levee Width incl. 50' offsets (ft)	Span Length (ft)
0	400	400
10	400	406
20	400	426
30	400	462
40	400	522

For a highway bridge, the longest available span for standard prestressed concrete beams is around 120 ft., and the longest available span with conventional rolled steel beams is around 250 ft. All of the bridge spans shown in the table above would require an exotic bridge design, such as arch, cable-stayed

8609 Northwest Plaza Drive
Dallas, Texas 75225-4292
(214) 346-6200
Fax (214) 273-1307

or fabricated steel section. Alternative 3C1 was aligned to keep the crossing skew within 30 degrees. NTTA's preliminary estimates for the needed spans on Alt 3C1 show an increase in overall project cost of around $22 million using spans appropriate for conventional rolled steel beams, and $190 million for the exotic bridge spans.

As an alternative, the NTTA proposes that the levees be widened at the roadway crossings and that a column be allowed in the area of the widened levee top at all crossing points to reduce the needed span lengths to less than 250 feet as shown in attached strip map Tab 3.3. The concept for allowing bridge columns near the levee top has been permitted on other bridges in the Floodway including the recently-approved Margaret Hunt Hill bridge (Woodall Rodgers Extension.) Using this approach, the table above changes as follows:

Bridge Skew (deg)	Levee Width incl. 50' offsets (ft)	Span Length (ft)
0	200	200
10	200	203
20	200	213
30	200	231
40	200	261

Assuming a column line at the levee top, the crossings could be achieved with conventional rolled steel spans (250' max) with a skew of up to ~ 37 degrees. NTTA recommends this approach, and proposes to use this design as shown in Alternative 3C2 (see attached strip map Tab 3.3). The proposed areas for reinforced levees with landside widening are highlighted in green on the map. Bridge bent (column) locations are also shown in the plan and profile sections of the 3C2 map. Cross sections of Alternative 3C2 at 200 feet increments are provided as Tab 3.4.

The reinforced levees consist of a substantial widening of the levee in the area of the Trinity Parkway crossings. The following responds to concerns of this concept on a previous draft:

- From a hydraulic perspective, the realignment will make no change on the river hydraulics since the riverside face of the levee is unchanged.
- From the geotechnical perspective, the levee top width is increased from its normal 20 feet up to a maximum in excess of 200 feet, and levee sides slopes are unchanged from the Corps design. We would welcome further specific guidance on this issue.
- From an economic perspective, NTTA would participate in any additional costs for the levee reinforcement.
- From an environmental perspective, any additional environmental impacts would be accounted for in the Trinity Parkway SDEIS and FEIS.
- Any impact on the Corps sump design would be addressed and mitigated as part of the Trinity Parkway.
- Required additional ROW for 'project lands,' necessary for this widening, would be acquired and deeded back to USACE.

Halff Associates

8609 Northwest Plaza Drive
Dallas, Texas 75225-4292
(214) 346-6200
Fax (214) 273-1307

Large scale plans of all five proposed levee crossings are attached for discussion:

3.5 Trinity Pky Levee Crossing Detail at Hampton / Inwood Rd. (Section A-A)
3.6 Trinity Pky Levee Crossing Detail at Continental/Woodall Rodgers Fwy (Section B-B)
3.7 Trinity Pky Levee Crossing Detail at Industrial Blvd./DART (Section C-C)
3.8 Trinity Pky Levee Crossing Detail at MLK Blvd. / BNSF Railroad (Section D-D)
3.9 Trinity Pky Levee Crossing Detail at IH 45 (Section E-E)

The Geotech/Structures Work Group is asked to discuss this concept and suggest the methodology for evaluation of the structural integrity of the levee reinforcement.

The May 7, 2007 meeting of the Geotech Work Group suggested that a diaphragm wall using reinforced concrete in the center of the levees be considered as an alternative to the earthen levee reinforcement. The diaphragm wall would be required to sustain the full loading of the flood waters without consideration of the support from surrounding levee embankment.

Following the meeting, Halff prepared a new Trinity Parkway levee crossing detail at Hampton/Inwood Road using the diaphragm wall (attached). Bridge spans of a typical 120' length were developed, and centered over the diaphragm wall. With the 28 degree skew of the Parkway over the levee, the 120' bridge spans result in the nearest bridge pier being approximately 19 feet from the wall.

Depth to shale in this location is approximately 60 feet below the floodway surface. Using a 35' depth of levee and 5' penetration of the wall into shale, an approximate 100' deep diaphragm wall is needed. The diaphragm wall, bridges and soil/shale depths are depicted on the attached cross sections. The wall was considered to extend along the levee laterally along the roadway crossing to a point where the bridge piers no longer penetrate the levee footprint. For Hampton Road, this requires about 900 linear feet of diaphragm wall.

THIS PAGE INTENTIONALLY LEFT BLANK

Halff Associates

8616 Northwest Plaza Drive
Dallas, Texas 75225-4292
(214) 346-6200
Fax (214) 739-0095

MEETING MINUTES

To: All Attendees

From: Matt Craig, Halff Associates, Inc.

Subject: Trinity Parkway: GeoTech/Structures Workgroup Coordination Meeting

Meeting Date: May 7, 2007

Location: Halff Associates, Inc. 8617 Northwest Plaza, Dallas, TX

Minutes Date: May 17, 2007

AVO No. 17826, WO25

Attendees:

See attached signup sheet

Item	Description
1.	This meeting was held to review the geotechnical issues of concern with regards to the proposed Trinity Parkway, City of Dallas Lakes and USACE's flood fighting capabilities. NTTA opened the meeting. After self introductions,,a review of past meetings and the Goals and Objectives of this Geotechnical Workgroup were discussed as follows: • Review geotechnical analysis to date, • Review borrow material characterization and earthwork balances, • Review impacts to the levee template at the Trinity Parkway crossings, • Review northbound ramps to cross street bridges and their impacts to the levee template and the new IH 35E ramp.
2.	Halff provided an overview of the analysis of the Borrow Material Characterization and Earthwork Balance as presented in Memorandum 2.1 of the handout. Issue: 2.9 million CY shortfall Assumptions: See discussion and conceptual levee cross-section, under Handout Materials, Tab 2 Characterization of Borrow Materials, page 4 of 6. In brief, the following assumptions were used: Levee raise SPF + 3.0'; 4:1 SS, Top of Levee 20.0' wide. Discussion of the topic identified the following points: • USACE noted that current policy (33 CFR. 408) does not allow excavation of material from within the floodway. USACE Headquarters would need to review the Environmental Impact Statements (E.I.S.) Record of Decision (R.O.D.) and 35% complete construction plans before issuing a decision to allow excavation of material from the floodway. • CH2M Hill noted that allowance for compression of existing soil under new

8616 Northwest Plaza Drive
Dallas, Texas 75225-4292
(214) 346-6200
Fax (214) 739-0095

embankment needs to be added to the earthwork balance calculations.

- USACE noted that an allowance for unusable materials encountered from borrow sites needs to be considered, specifically questioned assumption that 100% of the material characterized as 'Usable' is reasonable.
- USACE noted their concern for potential shortening of seepage paths under the levees both during and after construction. They requested that excavation needs to be at least 200 feet from the toe of the levee. (See EM 11-1-1906)
- USACE noted their concern for the location and seasonal fluctuation of the Ground Water Table and potential allowance for loss of material to dewatering needs to be added to analysis. Terracon noted that material dewatering could be addressed during construction so that dried material could still be used.
- USACE would need to see plans for segregation, processing and stockpiling of materials as well as locations for waste material disposal.
- All accepted the assumption of 10% loss of fill volume due to shrinkage is acceptable.
- Assumption of 4:1 slopes for the raised levee improvements is acceptable. USACE has not made any height or volume calculations for the raised levee at this time.

Discussion: USACE has published standards for boring quantities/ frequency to determine the adequacy of borrow sites and seepage analysis that are not met with the current data. The City of Dallas has plans to acquire more borings and will use GINT for analysis. NTTA recognized the need for additional data collection but, given the current stage of project development, asked whether it would be possible to balance this need to the extent that USACE was satisfied, ie., that the data collected could be considered representative. Further, a request for USACE concurrence was made regarding the proposed plans for earthwork,,, contingent on future plan development and the USACE's approval of 408. USACE responded that pending the results of additional analyses, investigations and risk management measures for the various proposals, it would not be possible for them to offer tentative concurrence, relative to the adequacy of the data collected. The Fort Worth District is able to conduct technical reviews. To address the 2.9 million CY short fall, the City stated that the boundaries for the west Dallas lake can be expanded if more fill is needed, or the north overbank toward the river confluence could be considered as an alternative source. NTTA and USACE agreed to this.

3. Halff continued with a review of the additional Alternatives Analysis for the Trinity Parkway conducted since the February 2007 meeting. Halff presented **Alternative ALN 3C1** (exhibit 3.2) which incorporates long span (>500') bridges at the 5 levee crossings. Halff noted that this alternative:

   - Could eliminate bridge pier penetrations into the levee template.
   - Increases the cost of the project by approximately $190 million, as five such crossing would be required.
   - Between approx 2000 feet north of Continental to the DART bridge, requires the parkway alignment to be located farther into the floodway to minimize the length of the roadway crossing the levees and to eliminate penetration of the levee template with piers, and requires additional bridge structure, as noted above. The visual impacts associated with this spanning option negatively impacts the City of Dallas' Balanced Vision Plan.

   The Corps indicated their preference for ALN 3C1 because it minimized impacts to the levee and reduces the quantity of fill needed for embankment. The Corps questioned whether the

8616 Northwest Plaza Drive
Dallas, Texas 75225-4292
(214) 346-6200
Fax (214) 739-0095

entire roadway could be put on structure within the floodway – had this been considered? Could this be considered?

New Alternative, ALN 2C was presented, which follows the Irving / Industrial Blvd alignments (2A and 2B), but is in a tunnel. Halff noted that the construction cost alone could exceed $3 to 5 billion based on unit rates calculated for the proposed IH 635 tunnel at Dallas North Tollway. NTTA noted that this option would not meet the Trinity Parkway project's Purpose and Need given the elimination of access to and from the roadway, as well as its ability to be constructed in time to function as a reliever route for Project Pegasus. The Corps was appreciative that the tunnel option was explored, and then asked whether an alternative that parallels the floodway on the west-side of the floodway had ever been explored, similar in concept to the way ALN 2A and 2B do to the east . NTTA / Halff stated that there is not a suitable alignment to the west of the floodway similar to Irving / Industrial Blvd due to the residential land uses in West Dallas and the need to cross the river floodway twice. An alignment through west Dallas could displace more residences, could have more traffic noise impacts to residences and have negative environmental justice impacts in addition to still having four levee crossings.

Halff presented **Alternative ALN 3C2** (exhibit 3.3) which had the following modifications since the February 1, 2007 submittal to USACE:

- Moved the south end of the proposed Trinity Parkway at least 50 feet from the toe of the proposed Lamar Levee Extension in the area between the DART Rail Bridge and IH 45.
- Modified the northbound Parkway ramps that connect to cross street bridges by replacing bridge structures with embankment and walls to reduce penetrations into the levee template.
- Added additional fill to the land side of the east levee at roadway crossings to reinforce the levee.
- Increased bridge spans up to 250 feet to reduce the number and location of penetrations into the levee template.

Halff also presented 5 drawings (exhibits 3.5 – 3.9) that focus on the areas of levee crossings and asked for comment from USACE for alternative ways to reinforce the levees in areas where the roadway is crossing.

Gene Rice presented the idea of placing a reinforced concrete wall longitudinally through the center of the levee that would structurally support a Standard Project Flood independent of the earth embankment (a reinforced concrete slurry wall, termed a diaphragm wall). The Parkway and Lakes Teams agreed to investigate this concept to reinforce the levees at the roadway crossings.

4. Items 4 and 5 on the agenda were postponed until the next meeting of the Geotech Committee. Chris Anderson closed the meeting.

After the meeting, the group has scheduled to meet again on May 18, 2007 at 9:00 A.M. at the USACE.

This concludes the Meeting Minutes. Our goal is to provide a complete and accurate summary of the proceedings of the subject meeting in these minutes. If you feel that any of the items listed above are not correct, or that any information is missing or incomplete, please contact Halff Associates so that the matter can be resolved, and a correction issued if necessary. These minutes will be assumed to be correct and accepted if we do not hear from you within ten (10) calendar days from your receipt.

M7-0507 - GeoTech Group Mtg at Halff.doc

THIS PAGE INTENTIONALLY LEFT BLANK

NORTH TEXAS TOLLWAY AUTHORITY

GEOTECH / STRUCTURES WORK GROUP - TRINITY PARKWAY
MAY 7, 2007 MEETING SIGN-IN

INITIAL	NAME	ADDRESS	AGENCY	PHONE	E-MAIL
CA	Chris Anderson	5900 W. Plano Pkwy, PO Box 260729 Plano, TX 75026	NTTA	(214) 461-2021	canderson@ntta.org
	Ghaleb Sunna	5900 W. Plano Pkwy, PO Box 260729 Plano, TX 75026	NTTA (Alternate)	(214) 461.2060	gsunna@ntta.org
AB	Anita Branch	819 Taylor St., Room 3A28 Fort Worth, TX 76102	USACE		Anita.Branch@swf02.usace.army.mil
GR	Gene Rice	819 Taylor St., Room 3A28 Fort Worth, TX 76102	USACE (Alternate)	(817) 886-1374	Gene.T.Rice@swf02.usace.army.mil
AW	Anita Wilson	300 East 8th St. # 826 Austin, TX 78701	FHWA	(512) 536.5951	Anita.Wilson@fhwa.dot.gov
phone	Jerry DiMaggio	Washington D.C.	FHWA	202-366-1569	Jerry.dimaggio@dot.gov
	Jorge Pagan	Washington D.C.	FHWA (Alternate)	202-366-4604	jorge.pagan@dot.gov
GA	Greg Ajemian	1500 Marilla Room 6B South Dallas, Texas 75201	City of Dallas	(214) 671-9504	gregory.ajemian@dallascityhall.com
	Rebecca Dugger	1500 Marilla Room 6BS Dallas TX 75201	City of Dallas (Alternate)	(214) 671-9501	rebecca.dugger@dallascityhall.com
TGA	Tim Abrams	8901 Carpenter Fwy, Ste 100 Dallas, TX 75247	Terracon	(214) 630-1010	tgabrams@terracon.com
MC	Matt Craig	8616 Northwest Plaza Dr. Dallas, TX 75225	Halff Associates	214.346.6375	mcraig@halff.com
	Stan Caldwell	8616 Northwest Plaza Dr. Dallas, TX 75225	Halff Associates (Alternate)	214.346.6280	scaldwell@halff.com
CH	Conrad Harrison	8616 Northwest Plaza Dr. Dallas, TX 75225	Halff Associates (Alternate)	214.346.6657	charrison@halff.com
DSM	David Morgan	8616 Northwest Plaza Dr. Dallas, TX 75225	Halff Associates (Alternate)	214.346.6390	dmorgan@halff.com
JS	Jim Schneider	9193 South Jamaica Street Englewood, CO 80112-5946	CH2M HILL	(720) 286-5243	jim.schneider@ch2m.com
	Jim Parrish	12377 Merit Dr. Suite 1000 Dallas, TX 75251	CH2M HILL (Alternate)	(972) 663-2322	jparrish@ch2m.com

NTTA

NORTH TEXAS TOLLWAY AUTHORITY

GEOTECH / STRUCTURES WORK GROUP - TRINITY PARKWAY
MAY 7, 2007 MEETING SIGN-IN

NAME	ADDRESS	AGENCY	PHONE	E-MAIL
Terry Coomes	1115 San Juan ct Arlington, Tx. 76012	CH2M Hill	817-469 8315	tcoomes2@RR.Tx.com
LES PERRIN	819 TAYLOR ST. COE FT-WORTH, TX	COE	817-886-1694	les.Perrin@swfoz.usace.army.mil
RUTH Rentch	~~[illegible]~~	FHWA-HQ	2023662034	
Todd Milburn	8616 Northwest Pl. Dallas, TX 75225	Halff Assoc.	214.346.6352	tmilburn@halff.com

Halff Associates

8616 Northwest Plaza Drive
Dallas, Texas 75225-4292
(214) 346-6200
Fax (214) 739-0095

MEETING MINUTES

To: All Attendees

From: Todd Milburn, Halff Associates, Inc.

Subject: Trinity Parkway: GeoTech/Structures Workgroup Coordination Meeting

Meeting Date: May 18, 2007

Location: USACE
819 Taylor St., Fort Worth, TX

Minutes Date: May 31, 2007

AVO No. 17826, WO25

Attendees:

See attached signup sheet

Item	Description
1.	This meeting was held to review the geotechnical issues of concern with regards to the proposed Trinity Parkway, City of Dallas Lakes and USACE's flood fighting capabilities. NTTA opened the meeting. After self introductions and a review of past meetings' topics, the Goals and Objectives of this Geotechnical Workgroup were discussed as follows: • Review borrow material characterization and earthwork balances, • Review impacts to the levee template at the Trinity Parkway crossings, • Review northbound ramps to cross street bridges and their impacts to the levee template, plus the at-grade IH 35E ramp. NTTA requests input from other attendee's about their goals for the meeting, and would request agency goals at subsequent meetings, based on the proposed agenda. NTTA's May 18th meeting goal: Reach consensus on whether additional borings are needed, and if so, where. This need is critical as it impacts whether the study limits of the SDEIS need to be expanded. If so, the data collection and additional analysis needed to bring this expanded area into the study should commence immediately. NTTA requests comments from attendees about the material and information presented at the May 7, 2007 meeting of this workgroup now that all have had an opportunity to review the material.
2.	Halff began the discussion of the Borrow Material Characterization and Earthwork Balance as presented in Revised Memorandum 2.1 Handout. ISSUE: 2.9 million CY borrow shortfall. Halff suggested that in addition to adjusting the proposed Trinity Parkway profile to minimize required embankment, any additional embankment could be provided by increasing the size of the proposed West Dallas Lake. City of Dallas commented that it had planned to allow the

8616 Northwest Plaza Drive
Dallas, Texas 75225-4292
(214) 346-6200
Fax (214) 739-0095

West Dallas Lake to be as deep as 25' which could help with the borrow shortfall; it was commented that where excavation depths met or exceeded 25' or more, additional borings would be required. City of Dallas requested other areas be considered, such as the Pavajo Wetlands project and that all possibilities include coordinating with the landscape architecture group to be consistent with the Dallas Balanced Vision Plan. Terracon stated that deepening the West Dallas Lake could use additional core borings in the area since the existing bore log information does not extend very deep.

TO DO: Update mapping to indicate areas and volumes that could be used for additional borrow, including the West Dallas Lake, river meander and Pavajo Wetlands.

ISSUE: Soil Characterization / Groundwater Table.

Discussion followed from the above topic into soil characterization. USACE noted that most of the existing bore log information that had been collected to this point was to establish 'top of rock' depths for future foundation work; the log information does not include all the testing that would be required by USACE to make determinations relative to fluctuating ground water table, seepage, permeable layers, sand lenses, seams, etc. It was noted that the majority of the borings provided at the first Geo-tech Team meeting lacked this comprehensive subsurface information. This information would be required to determine the design, stability and structural integrity parameters for the Trinity Parkway, proposed lakes and levee designs for construction plan preparation. NTTA asked the City of Dallas about its proposed boring plan and how quickly boring could start after a scope of services had been finalized. The City of Dallas responded it has one, through its current Price Agreement, but stated it will change now that it has the information that has been collected from past projects along the floodway. Additional discussion ensued concerning what level of subsurface information would be required for the SDEIS, FEIS and 35% construction plans. FHWA suggested using the Cone Penetrometer as an inexpensive alternative for core boring to collect subsurface data. With respect to sampling, USACE suggested taking borings within 150' of the levee toe, in a Zig-zag pattern.

Groundwater Table: Discussed 1st encounter at the W. Dallas Lake (10' to 15'), Urban Lake (10' to 20'), Natural Lake (5' to 9') and the Meander (variable). USACE expressed concern as to where and how raw excavated material would be prepared for use as embankment material.

TO DO: Tim Abrams, Anita Branch and Greg Ajemian: Develop a scope of services of what information needs to be collected at each stage of study (specifically for the SDEIS, FEIS, and 35% Plans for 404 Permit) and how it will be collected (sampling method and spacing). Draft is due for the next meeting of this workgroup.

3. Halff then moved to the topic of the Trinity Parkway levee crossings.

ISSUE: How to have the proposed Trinity Parkway and ramps cross the levee without negatively impacting the levee or the USACE's ability to fight floods and perform maintenance.

At the May 7, 2007 meeting of this workgroup USACE introduced the concept of constructing diaphragm walls within the levee at each of the 5 locations where the levee is crossed by roadway. These diaphragm walls extend from the top of the levee and extend down into the bedrock and be structurally sound enough to be able to contain a SPF if the river-side levee embankment were removed. Halff consulted with Bencor Construction who has extensive experience constructing slurry walls and diaphragm walls for USACE. Halff presented plan and profile exhibits showing the diaphragm wall and bridge piers at the Hampton Road crossing. Halff drew the concept of constructing the walls on a whiteboard. USACE noted the wall should be placed towards the top of the river side of the levees. Halff estimated the locations and lengths of diaphragm walls as:

- Hampton Rd crossing: 900 LF

8616 Northwest Plaza Drive
Dallas, Texas 75225-4292
(214) 346-6200
Fax (214) 739-0095

- Woodall Rodger's Ramps: 1400 LF
- Industrial Blvd. Ramps: 600 LF
- MLK Blvd. crossing: 900 LF
- IH 45 ramps: 450 LF and 300 LF

USACE emphasized that the diaphragm wall would not replace the flood prevention function of the levee, but would be a redundant, secondary system; key issues of concern for this redundant flood prevention system would be seepage control and structural integrity. USACE also stated that the diaphragm walls only address structural concerns and the criteria for O&M Access and other flood fighting activities would still have to be considered.

Because of the Team's apparent consensus to pursue the diaphragm wall solution, the group decided that the levee reinforcement concept which used extra embankment at the levee crossing (as presented at the May 7, 2007 meeting of this workgroup) would be tabled.

TO DO: Everyone review the diaphragm wall exhibits and submit comments to Halff. Halff develop exhibits for the other four levee crossings.

4. Halff began discussion concerning the northbound ramps to cross streets along the levee.

   ISSUE: Coordination with USACE on Levee Penetration, Flood Fighting, and O&M Access.

   Halff presented an alternative design for the northbound ramps to cross streets along the levee. Plans and cross sections were distributed at the May 7, 2007 Geotech Workgroup Meeting. The February 2007 design had the ramps on bridge structure with piers penetrating the levee template. The revised design places the ramps on earthen fill with retaining walls. Halff provided select cross sections for the ramps at Hampton, Sylvan, Houston/Jefferson, Corinth and MLK. Halff also presented the IH35E ramp which had not been shown previously, and briefly reiterated the importance of maintaining this ramp to south Dallas and southern Dallas County in order to maintain key political support for the project. Due to geometrics, the 35E ramp could not bridge over the levee with a 15 foot clearance so it has been designed as an at-grade ramp, benched on extra embankment as it passes over the levee. The ramp will include removable barriers that will allow USACE O&M vehicles to close off the ramp and have access across the levee. USACE noted the drainage for the IH35E ramp embankment needs to be changed to drain away from the levee. No further comments were made concerning these ramps.

5. The meeting adjourned at 11:30 a.m.

   The workgroup plans to meet again the morning of June 5, 2007 at Dallas City Hall.

This concludes the Meeting Minutes. Our goal is to provide a complete and accurate summary of the proceedings of the subject meeting in these minutes. If you feel that any of the items listed above are not correct, or that any information is missing or incomplete, please contact Halff Associates so that the matter can be resolved, and a correction issued if necessary. These minutes will be assumed to be correct and accepted if we do not hear from you within ten (10) calendar days from your receipt.

M7-0518 - GeoTech Group Mtg at USACE.doc

THIS PAGE INTENTIONALLY LEFT BLANK

NORTH TEXAS TOLLWAY AUTHORITY

GEOTECH / STRUCTURES WORK GROUP - TRINITY PARKWAY
MAY 18, 2007 MEETING SIGN-IN

INITIAL	NAME	ADDRESS	AGENCY	PHONE	E-MAIL
CG	Chris Anderson	5900 W. Plano Pkwy, Plano, TX 75026	NTTA	(214) 461-2021	canderson@ntta.org
	Ghaleb Sunna	PO Box 260729 Plano, TX 75026	NTTA (Alternate)	(214) 461.2060	gsunna@ntta.org
AB	Anita Branch	819 Taylor St. Fort Worth, TX 76102	USACE		Anita.Branch@swf02.usace.army.mil
GTR	Gene Rice	819 Taylor St., Room 3A28 Fort Worth, TX 76102	USACE (Alternate)	(817) 886-1374	Gene.T.Rice@swf02.usace.army.mil
	Les Perrin	819 Taylor St Fort Worth, TX 76102	USACE (Alternate)	(817) 886-1694	Les.Perrin@swf02.usace.army.mil
[illegible]	Anita Wilson	300 East 8th St. # 826 Austin, TX 78701	FHWA	(512) 536.5951	Anita.Wilson@fhwa.dot.gov
BY PHONE	Jerry DiMaggio	Washington D.C.	FHWA	202-366-1569	Jerry.dimaggio@dot.gov
	Jorge Pagan	Washington D.C.	FHWA (Alternate)	202-366-4604	jorge.pagan@dot.gov
	Ruth Rentch	Washington D.C.	FHWA (Alternate)	202-366-2034	Ruth.rentch@dot.gov
GA	Greg Ajemian	1500 Marilla,Room 6B South Dallas, Texas 75201	City of Dallas	(214) 671-9504	gregory.ajemian@dallascityhall.com
RD	Rebecca Dugger	1500 Marilla Room 6BS Dallas TX 75201	City of Dallas (Alt)	(214) 671-9501	rebecca.dugger@dallascityhall.com
TGA	Tim Abrams	8901 Carpenter Fwy,Ste 100 Dallas, TX 75247	Terracon	(214) 630-1010	tgabrams@terracon.com
MC	Matt Craig	8616 Northwest Plaza Dr. Dallas, TX 75225	Halff Associates	214.346.6375	mcraig@halff.com
SRC	Stan Caldwell	8616 Northwest Plaza Dr. Dallas, TX 75225	Halff Assoc (Alternate)	214.346.6280	scaldwell@halff.com
CH	Conrad Harrison	8616 Northwest Plaza Dr. Dallas, TX 75225	Halff Assoc (Alternate)	214.346.6657	charrison@halff.com
	David Morgan	8616 Northwest Plaza Dr. Dallas, TX 75225	Halff Assoc (Alternate)	214.346.6390	dmorgan@halff.com
[illegible]	Todd Milburn	8616 Northwest Plaza Dr. Dallas, TX 75225	Halff Assoc (Alternate)	214.346.66352	tmilburn@halff.com
[illegible]	Jim Schneider	9193 South Jamaica Street Englewood, CO 80112-5946	CH2M HILL	(720) 286-5243	jim.schneider@ch2m.com
RTC	Terry Coomes	12377 Merit Dr., Suite 1000 ~~Arlington~~, TX ~~76012~~ Dallas 75251	CH2M HILL (Alternate)	(817) 469-8315	Tcoomes2@rr.tx.com
	Jim Parrish	12377 Merit Dr., Suite 1000 Dallas, TX 75251	CH2M HILL (Alternate)	(972) 663-2322	jparrish@ch2m.com

NTTA

NORTH TEXAS TOLLWAY AUTHORITY

GEOTECH / STRUCTURES WORK GROUP - TRINITY PARKWAY
MAY 18, 2007 MEETING SIGN-IN

NAME	ADDRESS	AGENCY	PHONE	E-MAIL
G. Santarelli	2315 Southwell Road Dallas	Bencor Corp.	972-247 6767	GSantarelli @ Bencorconstruction.com
Lawrence Piccagli	2315 Southwell Rd Dallas Tx 75229	BENCOR CORP.	972 247-6767	lpiccagli@bencor construction.com
Joe Novoa	~~Joe Ho~~ 8616 NW. Plaza Dr	HALFF	214-346-6250	JNOVOA@HALFF.COM
Guy Benedet	2315 Southwell Rd Dallas Tx 15229	BENCOR CORP	972 247 6767	benedet@bencorconstruction.com
Kevin Craig	819 Taylor St. Ft. Worth, Tx.	USACE	817-886-1473	Kevin.l.craig@swf02-usace.army.mil
Jill Jordan	1500 Marilla 4DN Dallas 75201	City of Dallas	214-670-5299	jill.jordan@dallascityhall.com

Halff Associates

8616 Northwest Plaza Drive
Dallas, Texas 75225-4292
(214) 346-6200
Fax (214) 739-0095

MEETING MINUTES

To: All Attendees

From: Matt Craig, Halff Associates, Inc.

Subject: Trinity Parkway: GeoTech/Structures Workgroup Coordination Meeting

Meeting Date: June 5, 2007

Location: Dallas City Hall
1500 Marilla, Dallas, TX

Minutes Date: June 27, 2007

AVO No. 17826, WO25

Attendees:

See attached signup sheet

Item	Description
1.	This meeting was held to review the geotechnical issues of concern with regards to the proposed Trinity Parkway, City of Dallas Lakes and USACE's flood fighting capabilities. NTTA opened the meeting. After self introductions, Halff requested comments or changes to the minutes of the May 18, 2007 meeting of the Geotech Work Group. None were offered at the meeting, but comments on the minutes should be forwarded to Matt Craig at Halff Associates prior to the next meeting.
2.	The Work Group next discussed the Borrow Material Characterization and Earthwork Balance. ISSUE: Soil Characterization / Groundwater Table. Discussion followed into soil characterization requirements for the Supplemental Draft Environmental Impact Statement (SDEIS), Final EIS and final construction plans. Based on discussions at the previous Geotech Work Group meetings, and follow-on correspondence between Group members, the City of Dallas developed a scope of work for additional soil borings to further characterize the borrow materials. Dallas will issue a work authorization contract to Terracon for 29 additional borings for use in the SDEIS. Terracon then explained the purpose of the borings was to resolve questions for the SDEIS, and that additional investigations would be required for the FEIS and construction plan preparation. They distributed a copy of the scope with a table and map for the borings, which included twenty borings for the lake and river meander characterization for borrow classification and under seepage analysis of the levees, and nine borings for the Pavaho wetlands area's borrow classification and wetland design. Borings would extend from 15' to 35' below grade, and groundwater elevations will be noted. Testing to determine soil classifications will include liquid and plastic limits, moisture content, and percent passing the #200 sieve. Dallas expected to issue the notice to proceed within a day or two, with the work expected to be completed in four weeks, weather permitting. USACE noted that additional geotechnical investigation would be needed for the diaphragm

8616 Northwest Plaza Drive
Dallas, Texas 75225-4292
(214) 346-6200
Fax (214) 739-0095

wall design, but the current investigation was adequate for the SDEIS evaluation of the walls. USACE will evaluate the boring plan for adequacy and respond within a week if more borings are required for the SDEIS. Extent of the excavation was also noted by USACE as a concern for seepage. LopezGarcia Group noted that they are evaluating the proximity of the lake and river relocation excavation to the levees to maintain 200' of separation to avoid seepage. The work group then discussed the possibility of installing groundwater monitoring wells as part of the boring plan, but noted concerns with meeting TCEQ requirements and potential for floodwater entering the wells.

TO DO: Tim Abrams, Anita Branch and Greg Ajemian: Develop a scope of work for information needed at the FEIS, 35% Plans, and 404 Permit stages, and note how it will be collected. Draft plan will be produced for review by this workgroup.

ISSUE: Earthwork balance and borrow shortfall.

As discussed at the previous work group meeting, Halff suggested that in addition to adjusting the proposed Trinity Parkway profile to minimize required embankment, any additional embankment could be provided by increasing the size and/or depth of the proposed West Dallas Lake (near Westmoreland Road). City of Dallas noted that previous planning could allow the West Dallas Lake to be as deep as 25', but the area of the lake would be constrained by planned ball fields, Pavajo wetlands, river meanders and existing levees.

Halff next presented a draft revised profile of the Trinity Parkway. The roadway had been lowered as much as possible, lowering the road north of Continental as close to the 100 year flood elevation, and lowering the section behind the floodwall from Continental to Corinth as low a permissible without causing any fill walls or excavation into the levees. Dallas noted that they wanted the Parkway profile as low as possible to hide the traffic and let the floodwall work as a noise barrier. Halff expects to finish the profile effort and then calculate the updated embankment volume.

TO DO: Halff to recalculate earthwork balance with new design and use results of the SDEIS geotechnical investigation results to estimate the amount of suitable material available in the west Dallas lake.

3. Work Group next discussed the Trinity Parkway levee crossings.

ISSUE: How to have the proposed Trinity Parkway and ramps cross the levee without negatively impacting the levee or the USACE's ability to fight floods and perform maintenance.

At the May 7, 2007 meeting of this workgroup, USACE introduced the concept of constructing diaphragm walls within the levee at each of the 5 locations where the levee is crossed by roadway. These diaphragm walls extend from the top of the levee and extend down into the bedrock and are structurally sound enough to be able to contain a SPF if the river-side levee embankment were removed. USACE noted that the soil of the levee remained the primary structure, with the diaphragm wall acting as a back-up for redundancy.

Halff provided updated location maps for diaphragm walls at:

- Hampton Rd main lane crossing
- Woodall Rodgers Ramps
- Industrial Blvd. Ramps
- MLK Blvd. main lane crossing

8616 Northwest Plaza Drive
Dallas, Texas 75225-4292
(214) 346-6200
Fax (214) 739-0095

- IH 45 ramps

The maps also showed proposed bridge pier locations. USACE questioned the amount of space needed between the diaphragm wall and the bridge piers to avoid an arching interaction. Halff will investigate this concern. Dallas then questioned why this project needs 15' of clearance over the levee when other bridges don't have that much clearance. USACE stated that the diaphragm walls only address structural concerns and the criteria for O&M Access and other flood fighting activities would still have to be considered for the clearances. They also noted that the USACE design pamphlet for the southwest district was being updated to reflect this standard. The clearance requirement will be discussed further at the O&M Work Group.

The group next discussed the IH 35E ramp crossing the levee north of Houston St. bridge. The at-grade crossing of the ramp will also be considered through the O&M work group.

The team concluded the levee crossing discussion with the proposed Reunion palza crossing. Dallas asked that the Reunion plaza cross the levee at-grade with a retaining wall and fill along the edge of the Parkway, instead of a structure. LGG noted that the Lake Design team was meeting later in the week to discuss the overall design. O&M vehicles and pedestrians would have access across the plaza. The O&M Work Group will also discuss this issue.

TO DO: Everyone review the updated diaphragm wall exhibits and submit comments to Halff within one week. O&M Work Group will consider clearances at Hampton crossing, and at-grade crossings of the IH35 ramp and the Reunion Plaza.

4. The meeting adjourned at 11:45 a.m.

The workgroup plans to meet again the morning of June 28, 2007 at Dallas City Hall.

[Now to be rescheduled for the week of July 9]

This concludes the Meeting Minutes. Our goal is to provide a complete and accurate summary of the proceedings of the subject meeting in these minutes. If you feel that any of the items listed above are not correct, or that any information is missing or incomplete, please contact Halff Associates so that the matter can be resolved, and a correction issued if necessary. These minutes will be assumed to be correct and accepted if we do not hear from you within ten (10) calendar days from your receipt.

THIS PAGE INTENTIONALLY LEFT BLANK

NORTH TEXAS TOLLWAY AUTHORITY

1. Geotech/Structures Work Group Members

INITIAL	NAME	ADDRESS	AGENCY	PHONE	E-MAIL
	Chris Anderson	5900 W. Plano Pkwy, Plano, TX 75026	NTTA	(214) 461-2021	canderson@ntta.org
	Ghaleb Sunna	PO Box 260729 Plano, TX 75026	NTTA (Alternate)	(214) 461.2060	gsunna@ntta.org
	Anita Branch	819 Taylor St. Fort Worth, TX 76102	USACE		Anita.Branch@swf02.usace.army.mil
	Gene Rice	819 Taylor St., Room 3A28 Fort Worth, TX 76102	USACE (Alternate)	(817) 886-1374	Gene.T.Rice@swf02.usace.army.mil
	Les Perrin	819 Taylor St Fort Worth, TX 76102	USACE (Alternate)	(817) 886-1694	Les.Perrin@swf02.usace.army.mil
	Kevin Craig	819 Taylor St. Fort Worth, TX 76102	USACE		Kevin.I.Craig@swf02.usace.army.mil
	Anita Wilson	300 East 8th St. # 826 Austin, TX 78701	FHWA	(512) 536.5951	Anita.Wilson@fhwa.dot.gov
	Jerry DiMaggio	Washington D.C.	FHWA	202-366-1569	Jerry.dimaggio@dot.gov
	Jorge Pagan	Washington D.C.	FHWA (Alternate)	202-366-4604	jorge.pagan@dot.gov
By Phone	Ruth Rentch	Washington D.C.	FHWA (Alternate)	202-366-2034	Ruth.rentch@dot.gov
GA	Greg Ajemian	1500 Marilla,Room 6B South Dallas, Texas 75201	City of Dallas	(214) 671-9504	gregory.ajemian@dallascityhall.com
	Rebecca Dugger	1500 Marilla Room 6BS Dallas TX 75201	City of Dallas (Alt)	(214) 671-9501	rebecca.dugger@dallascityhall.com
	Jill Jordan	1500 Marilla Room 6BS Dallas TX 75201	City of Dallas (Alt)	(214) 670-5299	Jill.jordan@dallascityhall.com
	Tim Abrams	8901 Carpenter Fwy,Ste 100 Dallas, TX 75247	Terracon	(214) 630-1010	tgabrams@terracon.com
MC	Matt Craig	8616 Northwest Plaza Dr. Dallas, TX 75225	Halff Associates	214.346.6375	mcraig@halff.com
	Stan Caldwell	8616 Northwest Plaza Dr. Dallas, TX 75225	Halff Assoc (Alternate)	214.346.6280	scaldwell@halff.com
CH	Conrad Harrison	8616 Northwest Plaza Dr. Dallas, TX 75225	Halff Assoc (Alternate)	214.346.6657	charrison@halff.com
	David Morgan	8616 Northwest Plaza Dr. Dallas, TX 75225	Halff Assoc (Alternate)	214.346.6390	dmorgan@halff.com
TM	Todd Milburn	8616 Northwest Plaza Dr. Dallas, TX 75225	Halff Assoc (Alternate)	214.346.66352	tmilburn@halff.com
	Jim Schneider	9193 South Jamaica Street Englewood, CO 80112-5946	CH2M HILL	(720) 286-5243	jim.schneider@ch2m.com
	Terry Coomes	12377 Merit Dr., Suite 1000 Dallas, TX 75251	CH2M HILL (Alternate)	(817) 469-8315	Tcoomes2@rr.tx.com
	Jim Parrish	12377 Merit Dr., Suite 1000 Dallas, TX 75251	CH2M HILL (Alternate)	(972) 663-2322	jparrish@ch2m.com

JOE NOVOA 8616 NORTHWEST PLAZA DR HALFF 214.346.6250 JNOVOA@HALFF.COM
Dalay TX

Trinity Parkway EIS 1500 MARILLA, #6BS Page 3 CITY of DALLAS 214.671.8983 PAUL.LEHNER@DALLASCITYHALL.COM 6/5/2007
PAUL LEHNER DALLAS, TX 75201

NTTA

NORTH TEXAS TOLLWAY AUTHORITY

GEOTECH / STRUCTURES WORK GROUP - TRINITY PARKWAY
JUNE 5, 2007 MEETING SIGN-IN

NAME	ADDRESS	AGENCY	PHONE	E-MAIL
Bernie Hietbrink	1950 Stemmons Fwy #6000 Dallas, TX 75207	LopezGarcia Group	214-744-7777	bhietbrink@lggroup.com

Appendix H-3

Operations and Maintenance Workgroup Documentation

THIS PAGE INTENTIONALLY LEFT BLANK

DRAFT

EMERGENCY ACTION PLAN
FOR
TRINITY PARKWAY
DALLAS, TEXAS

NORTH TEXAS TOLLWAY AUTHORITY
Draft Subject to Revision
April 2006

TABLE OF CONTENTS

I. Statement of Purpose
II. Notification Flowchart
III. Emergency Detection, Evaluation and Classification
IV. Responsibilities under the EAP
  A. NTTA Responsibilities
  B. Responsibilities for Notification
  C. Responsibility for Evacuation
  D. Responsibility for Termination and Follow Up
V. Phases of Management
VI. Concept of Operations
VII. Appendices
  A. Plates
  B. Plans for Training, Exercising, Updating and Posting of the EAP
  C. Site Specific Concerns
  D. Approval of the EAP

Emergency Action Plan
for Trinity Parkway
Dallas, Texas

I. Statement of Purpose

The Trinity Parkway has approximately 6.2 miles or around 70 percent of its total length located on a raised embankment riverside of the levees within the Dallas Floodway. Within the Floodway, the road surface is typically set above the 100-year water surface elevation. The road is depressed below the 100-year level at bridge underpasses, where floodwalls and pump stations maintain the 100-year flood protection. Plate 1 shows the locations and names of the Floodwalls and Pump Stations. The 100-year flood protection standard is commensurate with the designs of other roadways on the NTTA system, and meets or exceeds FHWA design standards. Nevertheless, because of the sensitive Dallas Floodway location, a specific Emergency Action Plan (EAP) is established for Trinity Parkway.

The Trinity Parkway EAP establishes procedures to evaluate and react to hazardous river flooding events along Trinity Parkway, both as the event is being forecast and as the event occurs. The Plan also includes maintenance and repair actions in the event of overtopping of the depressed segments of the roadway or other damage to the roads. The EAP is implemented based on river flood stage data, supplemented by flood level gauges and alarms in the field.

II. Notification Flowchart

The Trinity Parkway Emergency Action Plan identifies a sequence of actions to be taken prior to, during, and after a major river flood event. The incident classification system uses the following four levels of severity in which the NTTA Maintenance may classify situations:

- Green- Low Condition: There is no significant rain/flood event in progress or expected. Condition is normal. Routine maintenance, training and preparedness activities are carried out.

- Yellow - Internal alert – A significant rain/flood event is in progress or expected. NTTA Maintenance is monitoring the situation, and has contacted on-site staff to assist in monitoring. However, no adverse impacts are anticipated, and no external assistance is needed to manage the situation.

- Orange - Developing situation – A significant rain/flood event is in progress or expected. There is potential for overtopping of the roadway or floodwalls, and/or flood warning devices indicate high water. The situation is progressing, but some time is available for analyses, decision-making, and mitigation efforts. NTTA Maintenance is closely monitoring, and is in close contact with Dallas Street Services Flood Control Division.

- Red - Imminent situation – There is an immediate or inevitable threat of overtopping the roadway or floodwalls, and closure/evacuation of the Trinity Parkway is required. NTTA Maintenance has activated all plans of action. With DPS and local police assistance, NTTA closes down the Parkway and evacuates motorists and personnel from threatened segments. (See Plate 2 for a roadway closure plan.) NTTA assists Dallas Street Services Flood Control Division, acting as the City of Dallas Flood Control District, in their activities related to the Floodway.

The flowchart for notification of involved persons and agencies follows the Alert Status color codes described above. Figure 1 below shows the flowchart.

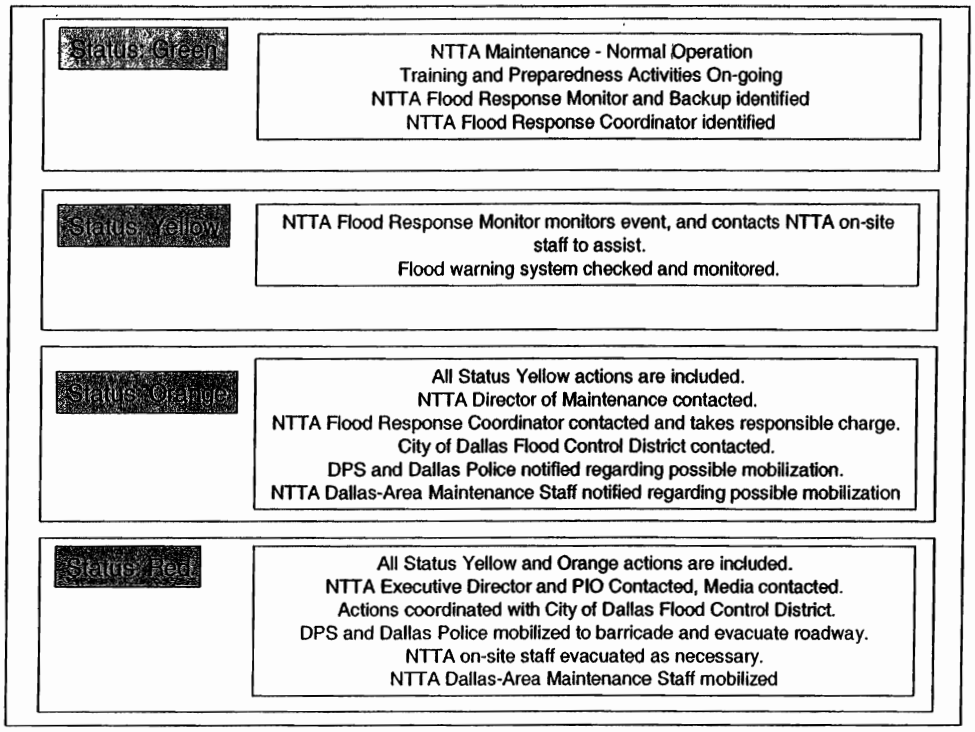

Figure 1 – Notification Flowchart

III. Emergency Detection, Evaluation and Classification

Severe weather in the City of Dallas, usually in the form of thunderstorms, occasionally causes high waters and wind damage in the city. These conditions usually unfold in a predictable sequence in the city: initial high wind, heavy rain, street and underpass flooding and stream flooding. However, the Trinity River watershed stretches up to 180 miles to the west of Dallas into Archer County, and the contributing drainage area at Commerce Street is 6,120 square miles. Because of the size of the watershed, flooding on the Dallas Floodway Levee System may occur during a local rain event, or could occur some time after a rain event as a flood peak reaches Dallas from the west. Accordingly, the NTTA Flood Monitor should closely monitor media resources and river flood stage data during and after periods of significant rainfall in the North Texas region to properly assess threat levels.

Major flooding within the Dallas Floodway is a potential threat to Trinity Parkway. At approximate elevation XXX.XX or about XX.X feet above flood stage water will begin to overtop the floodwalls along the riverside of the Parkway, and will rapidly flood the road. However, the Trinity River will take some time to reach this elevation. For instance, the 500-year flood hydrologic model used by the Fort Worth District of the US Army Corps of Engineers predicts about a 24-hour elapsed time between the first overtopping of the pilot channel banks in the Dallas Floodway (i.e. "flood stage"), and the water surface reaching the top of the floodwalls for Trinity Parkway. It is critical that NTTA staff use this time judiciously to fully assess the extent of predicted flooding and to initiate emergency response actions if needed.

Trinity River flood stage data and predictions are available from the Advanced Hydrologic Prediction Service of the Fort Worth Office of the National Weather Service. The Trinity River

Gauge at Dallas (located on the west end of the Commerce St. Bridge) is recommended as a useful source of flood stage information and predictions for the Parkway. Additionally, flood gages and warning devices are installed alongside Trinity Parkway and maintained by NTTA, as follows:

Gauge No.	Location	Purpose	Flood Stage at Gauge Base	Flood Stage at Top of Adjacent TP Floodwall
1	Adjacent to Hampton Pump Station	Flood Elevation Gauge		
2	Adjacent to Hampton Pump Station	High Water Alarm		
3	Adjacent to Commerce Pump Station	Flood Elevation Gauge		
4	Adjacent to Commerce Pump Station	High Water Alarm		
5	Adjacent to Houston Pump Station	Flood Elevation Gauge		
6	Adjacent to Houston Pump Station	High Water Alarm		
7	Adjacent to Corinth Pump Station	Flood Elevation Gauge		
8	Adjacent to Corinth Pump Station	High Water Alarm		

Once the river overtops the floodwalls, the low points of the Parkway could flood to depths exceeding five (5) feet in less than one hour. It is critical that the road be closed before the floodwalls are overtopped. Localized flooding could also occur on segments of the Parkway, if excessive rainfall in a short period of time overloads the capabilities of the pump system or if pump failure occurs. Barricading and closure of individual segments of the road may be warranted in these events.

IV. Responsibilities Under the EAP

A. NTTA Responsibilities

The NTTA Director of Maintenance is responsible for management and implementation of the EAP, including staffing, resource allocation, training, annual reviews, and updates. The EAP will include a detail schedule for implementation, annual reviews, and updates. The Director will designate the following staff members related to the EAP:

- A Flood Event Monitor (FEM), plus a second person acting as a backup. The FEM is responsible for closely monitoring media resources, river flood stage data, on-site sensors and gauges, and other available information during and after periods of significant rainfall in the North Texas region to properly assess flood threat levels.
- A Flood Response Coordinator (FRC), plus a second person acting as a backup. The FRC will take command of NTTA's response once the EAP is activated.
- The NTTA Director of Maintenance, plus a second person acting as a backup, will be responsible for activating the EAP.

B. Responsibilities for Notification

The Dallas Floodway is a federal flood control project, and is critical to the protection of a major portion of the City of Dallas. **The City of Dallas Street Services, Flood Control Division is to be given primary authority with respect to actions during flood events which may affect the levees or the overall operation of the flood conveyance system.**

The Division Manager of the City of Dallas Street Services, Flood Control Division should be consulted before and during any implementation of the Trinity Parkway EAP. The FRC is responsible for such notification. The NTTA staff is nevertheless authorized to proceed with implementing the Parkway EAP even if they are temporarily unable to contact the Dallas Flood Control Division representatives.

The following representative of the Street Services Department is NTTA's primary contact with the city on all matters related to the EAP. The contact information should be kept current at all times.

Ron Shindoll, Division Manager
City of Dallas
Street Services, Flood Control Division
2710 Municipal Street
Dallas, Texas 75215
Phone: (214) 670-6005
Mobile: (214) 957-5066
Email: Ron.Shindoll@DallasCityHall.com

The City of Dallas Department of Street Services has an Emergency Response Plan, produced and published in cooperation with the US Department of Homeland Security. The plan identifies the Department of Street Services as the lead city agency in the event of emergencies resulting from storm damage, tornadoes and flooding. The Street Services Department also maintains an Incident Command System and a mobile Street Command Van, which would be an important resource to NTTA during a major flood event.

C. Responsibility for Evacuation

Once the EAP is activated, the Texas Department of Public Safety (TDPS), in consultation with the FRC, will take initial command at the site, and will implement road closures and evacuation of motorists and personnel. TDPS will call in assistance, as needed, from Dallas Police Department (DPD), Dallas Fire Department (DFD), and NTTA Maintenance Division.

D. Responsibility for Termination and Follow Up

The FRC will be responsible for termination of the EAP. The FRC will authorize removal of road closures, if necessary preceded by pump-out and cleanup of flooded segments of the road. The FRC will also be responsible for preparation of a complete written report of actions taken and resources utilized. The FRC, in consultation with the Director of Maintenance, will make recommendations regarding follow-up activities, or improvements to facilities and procedures used in the EAP.

V. Phases of Management

1. Mitigation

   a. The NTTA Maintenance Department shall maintain storm drainage pumps, trash filters, natural drainage courses and the storm water collection system in a manner that will assure the most expedient removal of the maximum amount of storm water. Pumps will be periodically maintained and tested in accordance with manufacturers recommendations.

2. Preparedness

   a. Prepare and maintain a resource list of equipment and personnel, including the "base" location of equipment that can be utilized for flooding response and recovery.

   b. Maintain adequate supply of barricades and/or other traffic control devices.

   c. Maintain the Trinity Parkway gauge system and high water alarm system in good working order.

   d. Train personnel in response actions.

   e. The FEM will monitor weather conditions to be alert for any storm watches or warnings affecting Trinity Parkway.

   f. The FRC will maintain periodic contact with City of Dallas, Street Services, Flood Control Division.

3. Response

   a. The NTTA Ohio Drive Service Center will be the Emergency Operations Center (EOC), and the Trinity Parkway North Main Toll Plaza will be the Incident Command Post (ICP).

   b. As soon as possible the FRC or his/her designated representative shall report to the ICP and assume command of NTTA response operations. In the absence of the FRC, the highest ranking NTTA Maintenance Department personnel on site (HRMP) shall assume command of response operations. He/she shall establish contact with Texas Department of Public Safety (TDPS).

   c. The scope of the incident shall determine if the EAP is activated. If conditions warrant, the FRC (or the HRMP) will declare a flood emergency and order closure of Trinity Parkway by TDPS.

   d. TDPS will take initial command at the site, and will call in assistance, as needed, from Dallas Police Department (DPD), Dallas Fire Department (DFD), and NTTA Maintenance staff and contractors. TDPS, DPD and DFD will proceed with barricading (See Plate 2) and evacuation of the threatened segments of the Parkway, as well as providing personnel at critical points to detour traffic and prevent further entry.

   e. Until such time as search and rescue operations are complete and the flood threat has abated, TPDS shall have incident command and the FRC shall report to the TPDS incident command post and shall direct Maintenance Department response operations in accordance with the Incident Action Plan established by TDPS.

f. During the search and rescue phase, the FRC shall evaluate the scope of the incident and determine the resources and personnel needed for the recovery phase of operations and shall begin the process of summoning those resources to the scene.

g. Upon completion of search and rescue operations, TDPS shall relinquish Incident Command to the FRC or other proper NTTA Maintenance Department representative.

h. Upon assuming command the FRC shall establish an Incident Plan of Action (IPA).

4. Recovery

a. Account for all personnel and equipment.

b. Implement the IPA, including restoring pump stations to operational condition; pumping out low points; clearing mud and debris in preparation for reopening; restoring lighting, signage and toll collection equipment as needed.

c. Reopen road. Pick up all barricades and traffic control devices utilized

d. Complete a written report of actions taken and resources utilized.

e. If required, make recommendations for needed modifications to the EAP in the next annual update.

VI. Concept of Operations

Under FRC direction, NTTA personnel will assist TDPS in any required road closures and evacuations. NTTA will assist TPDS in rescue operations involving searches of debris and other tasks requiring departmental resources and heavy equipment. NTTA will assist TDPS in sealing off emergency areas, clearing obstructions to emergency traffic access and other tasks requiring departmental resources and heavy equipment. NTTA will mobilize sufficient forces and equipment to clear debris in order to return roadways and storm drainage systems to pre-incident conditions.

During an emergency incident, NTTA Maintenance Department and TPDS shall provide full cooperation with City of Dallas, Street Services, Flood Control Division (FCD) in their flood fighting operations. NTTA Maintenance will avoid any actions which may interfere with the FCD flood fighting operations, and will remove/mitigate any interference immediately that it comes to the attention of NTTA or is directed by the FCD. Assuming first priority allocation of NTTA staff and equipment to the EAP, additional staff and resources should be made available to serve under the direction of the Flood Control Division to support flood fighting operations.

VII. Appendices

A. Plates

- Plate 1 (North) - Trinity Parkway Roadway Closures in the Event of Threatened Flooding from the Trinity River.
- Plate 1 (South) - Trinity Parkway Roadway Closures in the Event of Threatened Flooding from the Trinity River.
- Plate 1 (North) - Trinity Parkway Pump Station and Floodwall Locations
- Plate 1 (South) - Trinity Parkway Pump Station and Floodwall Locations

B. Plans for Training, Exercising, Updating and Posting of the EAP

C. Site Specific Concerns

D. Approval of the EAP

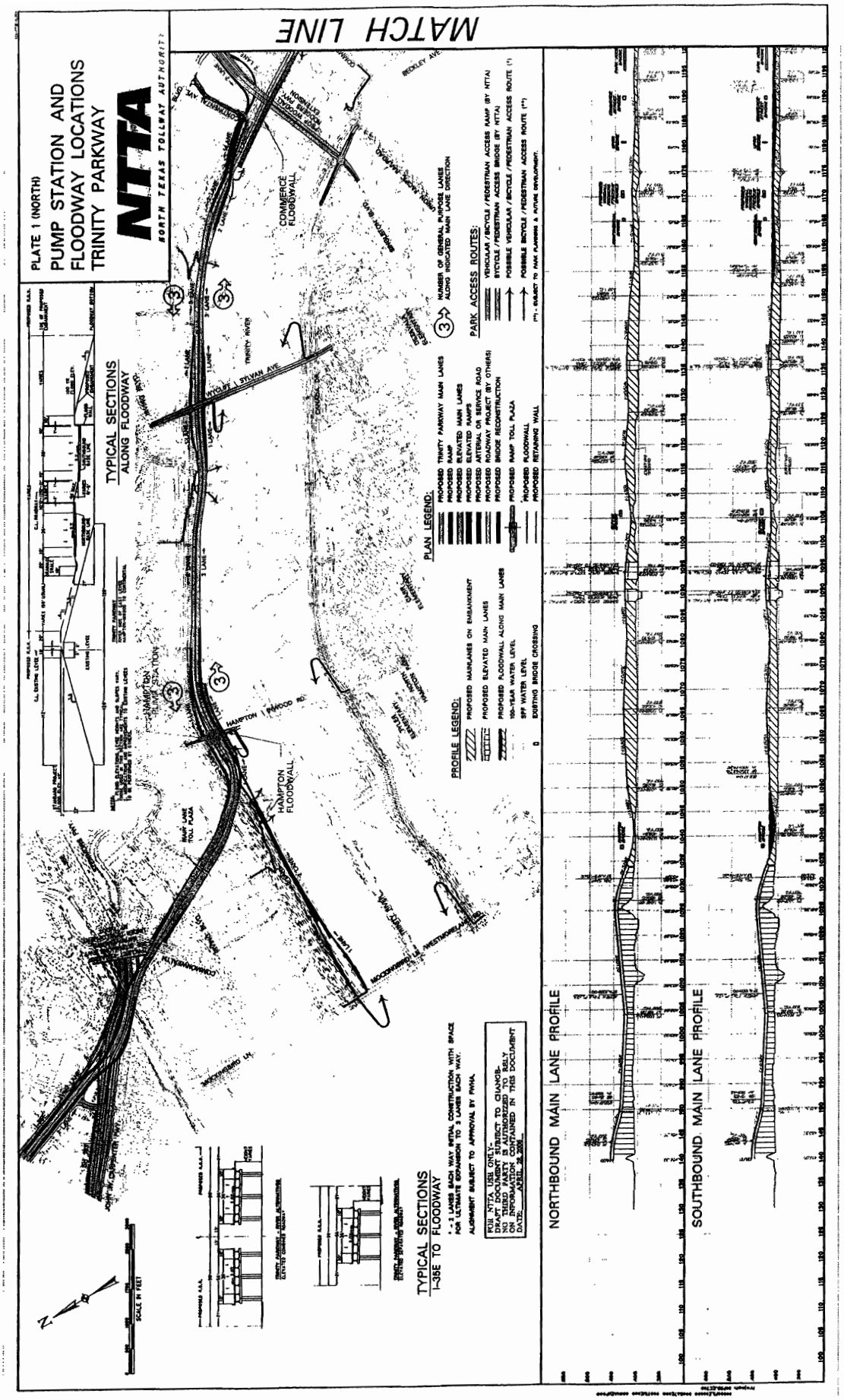
PLATE 1 (NORTH)
PUMP STATION AND FLOODWAY LOCATIONS
TRINITY PARKWAY
NTTA
NORTH TEXAS TOLLWAY AUTHORITY
MATCH LINE
TYPICAL SECTIONS
ALONG FLOODWAY
TYPICAL SECTIONS
I-35E TO FLOODWAY
COMMERCE FLOODWALL
HAMPTON FLOODWALL
HAMPTON PUMP STATION
TRINITY RIVER
WOLF & SEVAN AVE.
HAMPTON / PINWOOD RD.
PLAN LEGEND:
PROFILE LEGEND:
PARK ACCESS ROUTES:
NORTHBOUND MAIN LANE PROFILE
SOUTHBOUND MAIN LANE PROFILE
SCALE IN FEET

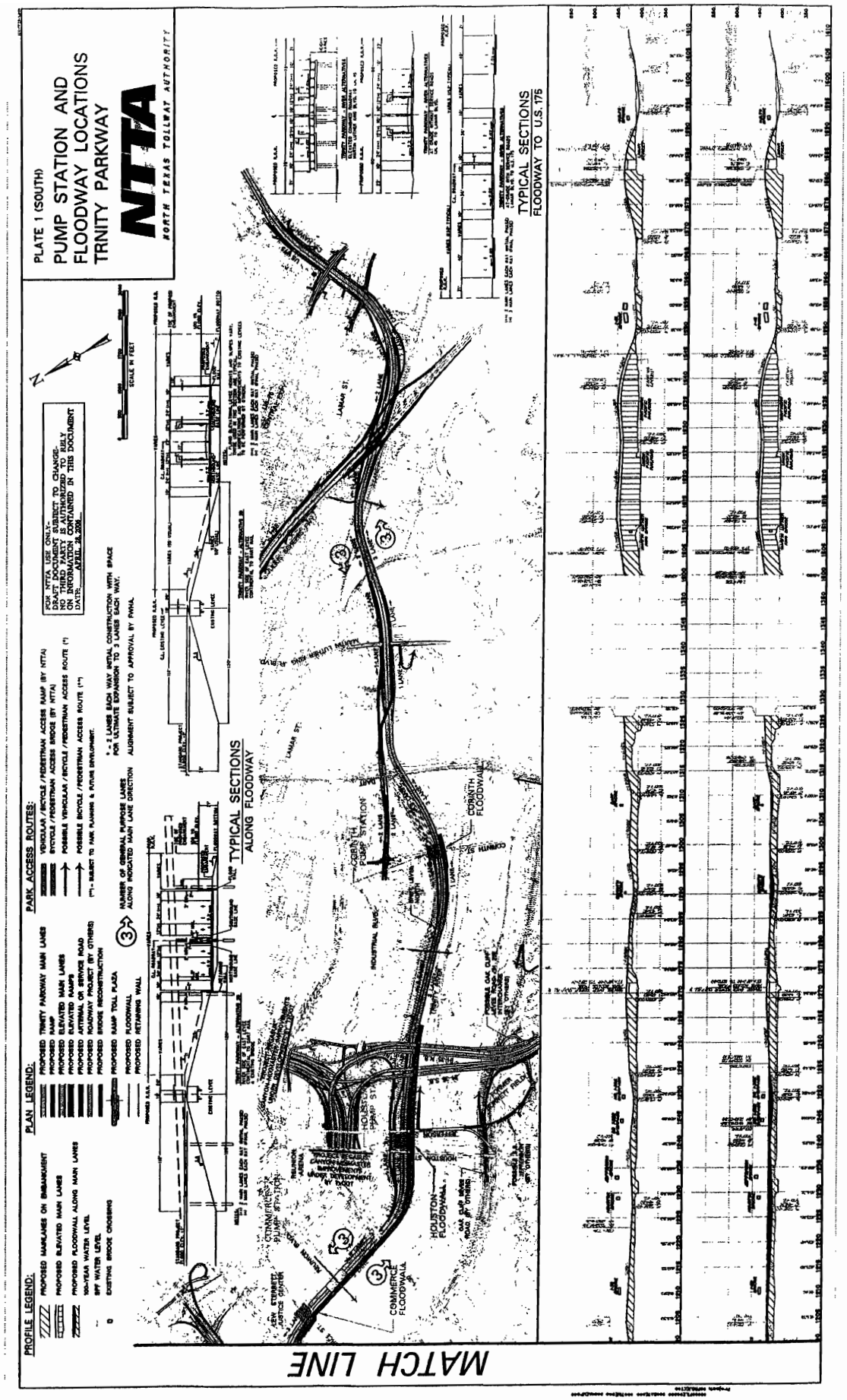
PLATE 1 (SOUTH)
PUMP STATION AND
FLOODWAY LOCATIONS
TRINITY PARKWAY
NTTA
NORTH TEXAS TOLLWAY AUTHORITY
PROFILE LEGEND:
PLAN LEGEND:
PARK ACCESS ROUTES:
TYPICAL SECTIONS
ALONG FLOODWAY
TYPICAL SECTIONS
FLOODWAY TO U.S. 175
COMMERCE FLOODWALL
HOUSTON FLOODWALL
CORINTH FLOODWALL
CORINTH PUMP STATION
LAMAR ST.
MATCH LINE

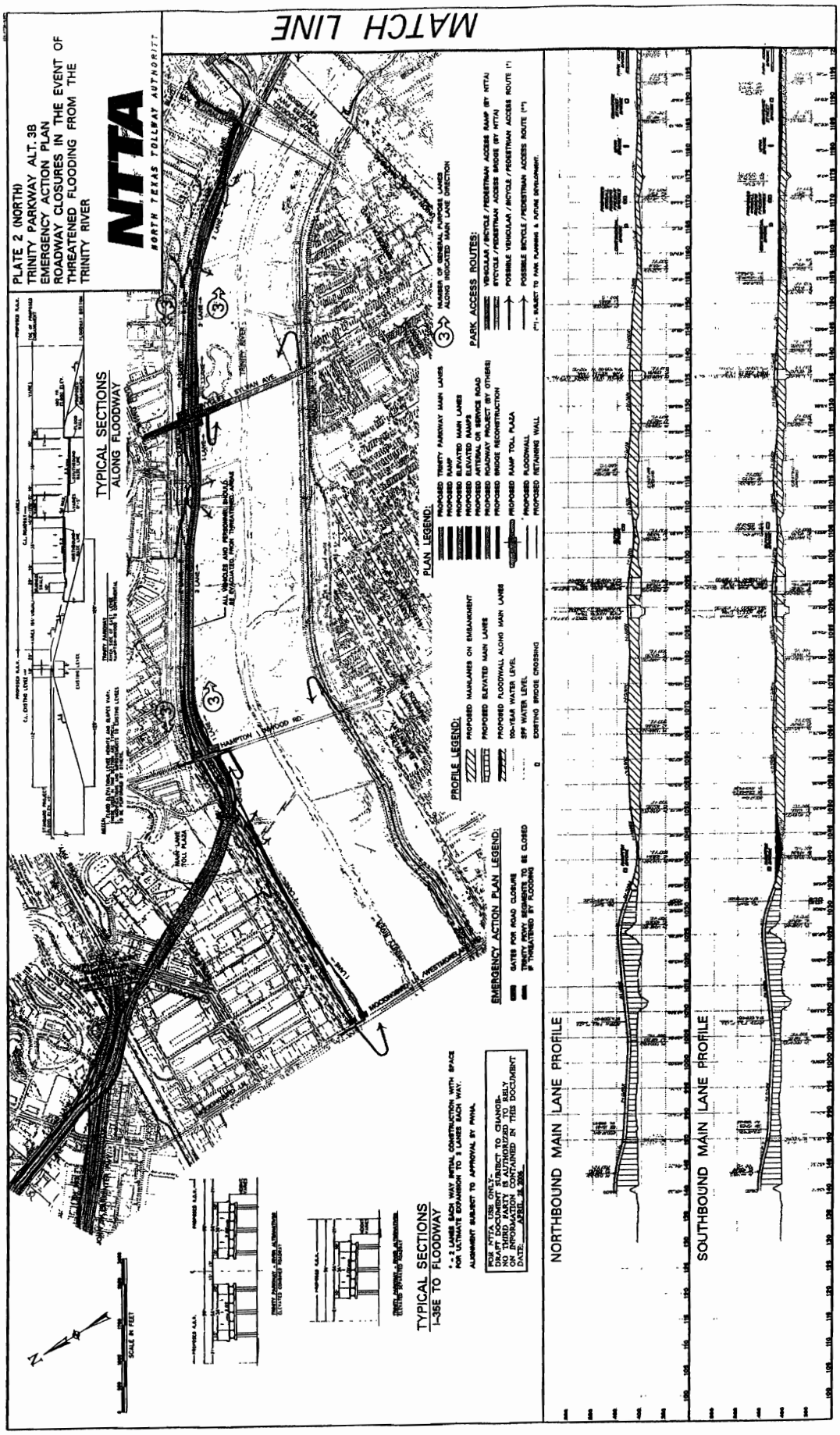
PLATE 2 (NORTH)
TRINITY PARKWAY ALT. 3B
EMERGENCY ACTION PLAN
ROADWAY CLOSURES IN THE EVENT OF THREATENED FLOODING FROM THE TRINITY RIVER
NTTA
NORTH TEXAS TOLLWAY AUTHORITY
MATCH LINE
TYPICAL SECTIONS
ALONG FLOODWAY
TYPICAL SECTIONS
I-35E TO FLOODWAY
PLAN LEGEND:
PROFILE LEGEND:
EMERGENCY ACTION PLAN LEGEND:
PARK ACCESS ROUTES:
NORTHBOUND MAIN LANE PROFILE
SOUTHBOUND MAIN LANE PROFILE
SCALE IN FEET

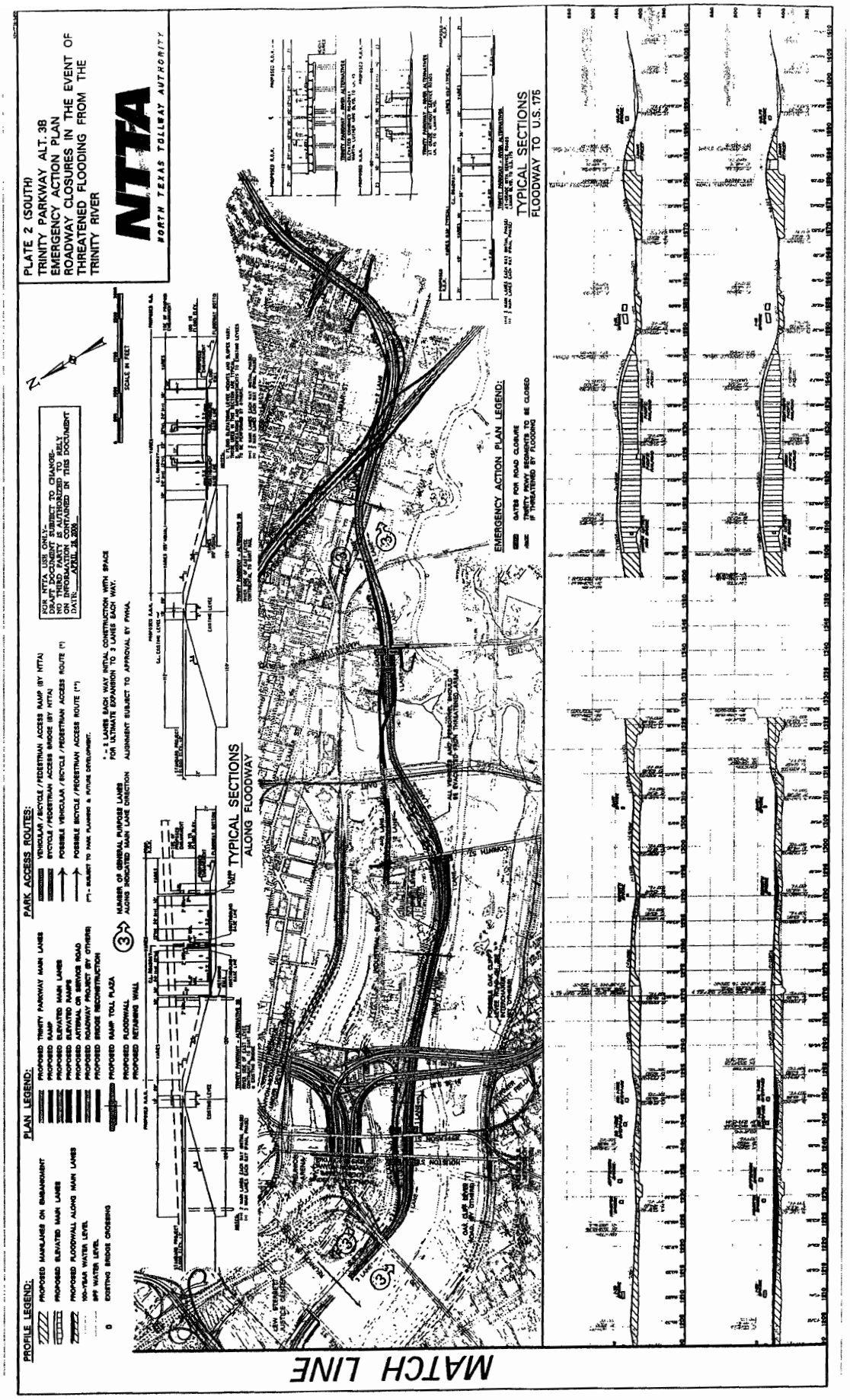
PLATE 2 (SOUTH)
TRINITY PARKWAY ALT. 3B
EMERGENCY ACTION PLAN
ROADWAY CLOSURES IN THE EVENT OF THREATENED FLOODING FROM THE TRINITY RIVER
NTTA
NORTH TEXAS TOLLWAY AUTHORITY
PROFILE LEGEND:
PROPOSED MAINLANES ON EMBANKMENT
PROPOSED ELEVATED MAIN LANES
PROPOSED FLOODWALL ALONG MAIN LANES
100-YEAR WATER LEVEL
SPF WATER LEVEL
EXISTING BRIDGE CROSSING
PLAN LEGEND:
PROPOSED TRINITY PARKWAY MAIN LANES
PROPOSED RAMP
PROPOSED ELEVATED MAIN LANES
PROPOSED ELEVATED RAMPS
PROPOSED FLOODWALL ALONG SERVICE ROAD
PROPOSED ROADWAY PROJECT BY OTHERS
PROPOSED BRIDGE RECONSTRUCTION
PROPOSED RAMP TOLL PLAZA
PROPOSED FLOODWALL
PROPOSED RETAINING WALL
PARK ACCESS ROUTES:
VEHICULAR / BICYCLE / PEDESTRIAN ACCESS RAMP (BY NTTA)
BICYCLE / PEDESTRIAN ACCESS BRIDGE (BY NTTA)
POSSIBLE VEHICULAR / BICYCLE / PEDESTRIAN ACCESS ROUTE (*)
POSSIBLE BICYCLE / PEDESTRIAN ACCESS ROUTE (**)
(*) - SUBJECT TO PARK PLANNING & FUTURE DEVELOPMENT.
NUMBER OF GENERAL PURPOSE LANES ALONG INDICATED MAIN LANE DIRECTION
* - 2 LANES EACH WAY INITIAL CONSTRUCTION WITH SPACE FOR ULTIMATE EXPANSION TO 3 LANES EACH WAY.
ALIGNMENT SUBJECT TO APPROVAL BY FHWA.
FOR NTTA USE ONLY:-
DRAFT DOCUMENT SUBJECT TO CHANGE-
NO THIRD PARTY IS AUTHORIZED TO RELY ON THE INFORMATION CONTAINED IN THIS DOCUMENT
DATE: APRIL 28, 2000
SCALE IN FEET
TYPICAL SECTIONS
ALONG FLOODWAY
EMERGENCY ACTION PLAN LEGEND:
GATES FOR ROAD CLOSURE
TRAFFIC FROM ROADWAYS TO BE CLOSED IF THREATENED BY FLOODING
TYPICAL SECTIONS
FLOODWAY TO U.S. 175
MATCH LINE

THIS PAGE INTENTIONALLY LEFT BLANK

Trinity Parkway EIS O&M Workgroup

6/6/2007
1:00-3:00 PM
Dallas City Hall, Rm 4CN#3

Meeting called by:	Greg Ajemian, City of Dallas	**Type of meeting:**	Progress Meeting
Facilitator:	Greg Ajemian	**Note taker:**	Doug Guinn

Attendees:

Chris Anderson, NTTA; Mark Sissom, USACE; *Anita Wilson, FHWA; *Ruth Rentch, FHWA; Greg Ajemian, COD; Kelly High, COD; David Garcia, COD; Ron Shindoll, FCS; Matt Craig, Halff Assoc; Paul Lehner, COD; Doug Guinn, LOPEZGARCIA (*These individuals joined the meeting by phone)

Minutes

Agenda item: 1. Introductions & Goals **Presenter:** Greg Ajemian

Discussion:

Everyone introduced themselves, who they were with and their role in the Trinity Parkway and/or Trinity Lakes projects. Matt passed out 7 Exhibits to be referenced for the following Agenda items and briefly explained what each was. Greg passed out a copy of an e-mail he sent summarizing points of the 11/8/2006 meeting of the O&M Workgroup. (Copies are attached.)

Action items	Person responsible	Deadline
✓ N/A	N/A	N/A

Agenda item: 2. Maintenance Responsibility Limits/ Roadways **Presenter:** Matt Craig

Discussion:

Reviewed SDEIS Plate 2-13 showing a typical Parkway section with limits of maintenance responsibility. Kelly wanted to clarify Note 3. so that it was clear that City of Dallas Flood Control District is ultimately responsible for all levee maintenance. He requested that the word 'minor' in this Note be deleted. He also requested that Item 3. in Greg's 11/8/2006 be used to add a Note 5. related to interlocal agreement between City, NTTA and possibly TxDOT to share in maintenance/repair costs along the portion of the east levee directly serving the Parkway and to allow NTTA to move ahead when necessary with Parkway priority maintenance/repair, with City oversight.

A question was asked as to whether the levee maintenance roads were of a standard width and construction. Ron indicated that he thought they were originally 10 feet wide and flexible base, but now vary from 10-20 feet in width. Greg mentioned that future roads within the Trinity Lakes park would need to be considered for the dual purpose of park and maintenance access. Access roads around the pump stations will need to be concrete to handle heavier maintenance vehicles.

David noticed that the Parkway structure piers as shown where the Parkway crosses the levee north of Hampton Road, fall within the existing maintenance roads on both the river and lake sides of the levee. It was agreed that the maintenance roadways could be relocated by NTTA to 'weave around' these Parkway piers.

Greg noted that slope maintenance for on-grade Parkway ramps will be NTTA's responsibility. The 'NTTA Mowing' areas indicated on Plate 2-13 are also areas for which NTTA will be required to provide litter cleanup.

Both desirable and undesirable ingress/egress between the Parkway and levee was discussed. No fence will be placed on the levee side of the Parkway. However Concrete Traffic Barrier's (CTB's) will be placed along the outside shoulder. It was agreed that further discussion should occur to determine whether CTB's should be continuous and if so, how to provide maintenance/emergency access points to/from the Levee to/from the Parkway.

A brief discussion occurred regarding location of new maintenance roads along the Levee extension. COD agreed to provide NTTA with locations for these new maintenance roads.

Action items	Person responsible	Deadline
✓ Modify Note 3. to delete the word 'minor'	Matt Craig	ASAP
✓ Add Note 5. based on item 3 in 11/8/2006 Greg Ajemian e-mail	Matt Craig	ASAP

Agenda item: 3. Major Levee Crossings **Presenter:** Matt Craig & Greg A.

Discussion:

Reviewed and discussed 5 levee crossing exhibits showing diaphragm walls. Matt explained that diaphragm walls would be located on the River side of the top of the levee and extend from shale or rock to flush with the top surface of the levee. In some cases the wall will be 100 +/- feet in depth. This wall will be considered as secondary flood protection with the levees stilled considered the primary means of flood protection. New bridge piers will straddle the diaphragm wall and are currently designed to be 10-15 feet clear of the wall.

It was indicated that the USACE desires a floodgate be constructed at the end of the current east levee near the DART bridge.

Discussed IH-35E connecting ramp At-grade levee crossing. Anita expressed concern with connection to IH-35E off-ramp. David and Kelly expressed concern of Able pump station access road crossing this ramp. This access road is used frequently for pump station maintenance and an at grade crossing is not desirable. Matt said that he would look at placing a hump in the profile between IH-35E and Jefferson to allow for the acces road to cross under this ramp. A new Able pump station and possibly new site is planned, but the exact location is not know at this time. Carter + Burgess will establish this in their new Design project scheduled to start later this month. Greg suggested shifting ramp alignment to cross under 90' Houston span. There may be a conflict with the future Industrial Boulevard realignment. Matt said they would confirm if this is accurate or not.

Doug passed out and described an exhibit showing a Conceptual Reunion Overlook Section (attached). There was general acceptance of the section with the following comments:

1) David stated that a landside levee maintenance road in this area would be desirable for flood-fighting purposes. It was requested that LOPEZGARCIA review this scenario and include a 'tunnel' access through the landside Overlook embankment. This access roadway would need to be above the 393.00 elevation required for the Able pump station.
2) Mark, David and Kelly stated that the river side levee slope beneath the Overlook structure should be armored with concrete rip-rap or similar system. Rock rip-rap is not desired.
3) Greg requested that the pedestrian connector bridge span the entire width of the Overlook vs. multiple narrower bridges.
4) LOPEZGARCIA shall also review headwall structures at each end of the Overlook 'tunnel'. Retaining walls are discouraged in lieu of sloped embankments where possible. The headwall solution should be 'Geotech-friendly'.

With changes to maintenance road alignments and access points in the vicinity of the Parkway levee crossing north of Hampton Road, an exception can be made to the 15 foot vertical clearance requirement. A 3 foot clearance is acceptable at this location.

Action items	Person responsible	Deadline
✓ Review IH-35E ramp connection and Horiz/Vert alignment	Matt Craig	ASAP
✓ Review 'tunnel' maintenance access through Overlook embankment	Doug Guinn	ASAP
✓ Review Overlook 'tunnel' headwall structures	Doug Guinn	ASAP

Special notes:

Please notify the Note Taker within five (5) calendar days if there are any revisions or additions to these notes.