United States Department of the Interior

OFFICE OF THE SECRETARY
Washington, DC 20240

TAKE PRIDE IN AMERICA

MAY 2 6 2005

ER 05/167

Mr. Salvador Deocampo
District Engineer, Texas Division
Federal Highway Administration
Federal Office Building
300 East 8th Street, Room 826
Austin, Texas 78701

Dear Mr. Deocampo:

Thank you for the opportunity to comment on the Draft Environmental Impact Statement (DEIS) and Preliminary Section 4(f) Evaluation for **Trinity Parkway** from IH-35E/SH-183 to US-175/SH-310 in Dallas County, Texas. The Department of the Interior (Department) has reviewed the document and offers the following comments.

GENERAL COMMENTS

We believe that the DEIS adequately describes the study area and the proposed alternatives under consideration. We also acknowledge the absence of a preferred alternative for the proposed action in the DEIS, noting that all alternatives, including the 'No Build' Alternative, are under equal consideration. We recommend that the selected alternative be based on the least amount of overall impacts to the environment and provide the most benefit to the entire community affected by the project. Evaluating benefits to the affected community should not be limited to transportation benefits, since not all persons within the affected area are motorists that would utilize an improved transportation route. However, everyone within the affected area would likely benefit from better air and water quality in the long term. While air quality is not likely to vary between alternatives, several alternatives could substantially affect water quality. Therefore, those alternatives that are determined to have the least overall potential impacts to long-term water quality should be considered a substantial benefit to the entire community. With this in mind, we have the following comments on the build alternatives.

The DEIS describes six build alternatives being considered for the proposed Trinity Parkway. We are concerned that three of these alternatives could have substantial impacts to wetlands, the Trinity River, and the community. Alternatives 3A, 3B, and 4 all involve constructing a portion of the proposed roadway within the existing levees that border the Trinity River creating the Dallas Floodway. The primary purpose of the Floodway is flood damage reduction. Placement of a roadway and related appurtenances in areas reserved for floodwaters would appear to undermine this

purpose. We are concerned that some of the available flood storage volume within the Floodway may be permanently lost. These alternatives would also replace the existing permeable surfaces with impervious roadway, which may create adverse flooding conditions for communities downstream of the Floodway. Severe flooding occurred in the City of Dallas in 1989 and 1991 downstream of the existing levees prompting the current proposal for the Dallas Floodway Extension (DFE) project. The combination of less flood storage volume, increased area of impermeable surfaces, and the DFE could result in the shifting of future flooding problems downstream of the Dallas area.

The placement of new roadway within the Dallas Floodway may also adversely affect water quality within the Trinity River, both short and long term. Short-term impacts include soil disturbance from construction that accelerates erosion and increases sediment load in runoff entering the river. Sediment entering waterways through runoff is a primary source of impairment to surface waters. Long-term effects include the contaminants in runoff associated with vehicle traffic and road maintenance (petroleum products, pesticides, fertilizers, etc.) directly entering the floodplain. The existing levee system would exacerbate these effects by shunting runoff directly to the river. Additionally, a portion of the existing wetlands and vegetation within the Floodway that currently filters pollutants would be replaced with roadway and related fixtures, increasing the potential adverse effects to water quality.

While we understand that the purpose of the proposed action is to address long-term transportation problems, we believe that Alternatives 3A, 3B, and 4 may have long-term impacts to fish and wildlife resources, water quality, and flood control. We recommend the area within the Dallas Floodway be utilized to improve water quality, provide habitat for wildlife, and decrease flood damage by managing the existing emergent wetlands, grasslands, and riparian corridor. These irreplaceable ecological functions provided by the floodplain would benefit the entire community in the long term far beyond the relief of traffic congestion.

We also understand that the proposed action would be coordinated with the proposed DFE. The study area for the proposed action overlaps portions of the DFE project area, and we have concerns that impacts to this area may preclude mitigation options for the DFE, depending on the timing of implementation of both projects. We encourage close coordination with the DFE project team for the purpose of ensuring the enhancement of fish and wildlife resources associated with the Trinity River and providing adequate mitigation and restoration opportunities.

For these reasons, the FWS recommends alternatives 2A, 2B, or 5 be selected for the proposed Trinity Parkway. We also recommend the 'No Build' Alternative be given further consideration. As noted in the DEIS, an advantage of the 'No Build' Alternative is the potential to fund other transportation projects. While the 'No Build' Alternative does not immediately address projected growth and congestion, the funding of other projects could include appropriate planning to reduce the volume of traffic in the area.

Page -3-

Developing incentives for motorists to utilize public transportation and High Occupancy Vehicles should not be overlooked as a long term solution.

SPECIFIC COMMENTS

Section 2.3.1, Pages 2-13, 14. Under the discussion of alternatives, there is a description of the costs associated with the 'No-Build' Alternative. Two of the bullets in this description include "*...monetary value of time lost by motorists due to lower operating speeds...*" and "*...intangible costs associated with the ... annoyance for average motorists....*" These costs may not be appropriate to include in the EIS since they cannot be measured nor directly attributed to maintaining the current conditions. Alternatively, this section could include the costs associated with an incentive based campaign targeted at motorists to reduce the average volume of vehicular traffic in the area. Motorists should be made aware of the substantial benefits public transportation and High Occupancy Vehicles have on air quality, water quality, and traffic conditions.

Section 3.5.5, Pages 3-99 to 3-105. The evaluation of water quality associated with the Trinity River is generally accurate, noting it is contaminated by discharges of effluent and urban runoff. While the contamination of the Trinity is evident and has extended to the fish community, a recent study by the FWS has found a resilient fish assemblage within the portion of the river traversing the Floodway. A fish survey conducted in 2004 resulted in a high Index of Biological Integrity rating for the river in Dallas. This would indicate that the fish community within the river may be recovering from a history of severe water quality problems and emphasizes the need to protect and improve surface water quality. An important aspect of the proposed project should be to ensure that anticipated effects do not degrade the water quality within the Trinity River.

Section 4.12.2, 4.12.3, Pages 4-108 to 4-112. Direct impacts to water quality in the form of pollutants carried by storm water runoff are identified regarding the no build and build alternatives. While the assertion that impacts would be nonexistent from the no-build alternative is evident, each of the build alternatives is generalized to have the potential to contribute contamination from roadway runoff constituents. The DEIS neglects to make comparisons between build alternatives outside the floodway levees (alternatives 2A, 2B, and 5) and build alternative inside the floodway levees (alternatives 3A, 3B, and 4) which could reveal each alternative's potential to impact water quality from runoff pollution. We recommend that the final environmental impact statement make a full comparison of each build alternative's potential for introduction of pollutants into the floodplain and affecting water quality within the Trinity River.

Section 4.24.1, Page 4-160. Similar to the section on direct impacts to water quality (Section 4.12.2), the discussion of secondary impacts fails to differentiate anticipated impacts to water quality and fish and wildlife resources between build alternatives. This difference may be important, especially between those alternatives that are proposed within the Floodway. In order for an informed decision to be made regarding impacts to these resources, the potential secondary impacts between all build alternatives should be evaluated.

If you have any questions or comments, please contact Mr. Omar Bocanegra or Ms. Carol Hale of the Fish and Wildlife Service, Ecological Services Field Office, Arlington, TX, at (817) 277-1100.

Section 4(f) Evaluation

We recognize and appreciate the extent of public and agency participation conducted with affected parties on this project including Native American groups. We encourage you to continue consultation with these groups and the Texas State Historic Preservation Office throughout the remainder of the project, as appropriate.

We have also reviewed this project in relation to any possible conflicts with the Land and Water Conservation Fund (L&WCF) and the Urban Park and Recreation Recovery programs and found that L&WCF project 48-00134, Trinity River Greenbelt, could be adversely affected.

We recommend you consult directly with the official who administers the L&WCF program in the State of Texas to determine any potential conflicts with Section 6(f)(3) of the L&WCF Act (Public Law 88-578, as amended). This section states: "No property acquired or developed with assistance under this section shall, without the approval of the Secretary [of the Interior], be converted to other than public outdoor recreation uses. The Secretary shall approve such conversion only if he finds it to be in accord with the then existing comprehensive statewide outdoor recreation plan and only upon such conditions as he deems necessary to assure the substitution of other recreation properties of at least equal fair market value and of reasonably equivalent usefulness and location."

The administrator for the L&WCF program in Texas is Mr. Tim Hogsett, Director, Recreation Grants Branch, Parks and Wildlife Department, 4200 Smith School Road, Austin, Texas 78744-3291.

We understand that a Preferred Alternative has not been selected; therefore, at this time, we cannot concur that there is no feasible or prudent alternative to the Preferred Alternative selected in the document, and that all measures have been taken to minimize harm to these resources. We appreciate the opportunity to review this document and look forward to reviewing the document again once a Preferred Alternative has been selected.

Sincerely,

for Willie R. Taylor
Director, Office of Environmental
Policy and Compliance

NTTA Rec'd

ATTORNEYS & COUNSELORS
901 Main Street, Suite 6000
Dallas, TX 75202
(214) 953-6000, Fax (214) 953-5822
www.jw.com

JW
JACKSON WALKER L.L.P.

FACSIMILE

DATE: April 8, 2005

DIRECT DIAL NUMBER: (214) 953-5941

FROM: Jonathan Gilbert Vinson

DIRECT FAX NUMBER: (214) 661-6809

NAME	COMPANY NAME	FACSIMILE NUMBER	PHONE NUMBER
Christopher Anderson		214-528-4826	
Patrick Williams		952-742-7440	

PLEASE CALL (214) 953-5941
IF YOU DO NOT RECEIVE ALL PAGES.

FOR INTERNAL USE ONLY:

CLIENT/MATTER NO.: /

TK ID: JGV1 PAGE COUNT:

This facsimile is intended only for the use of the addressee. If the addressee of this facsimile is a client or agent for one of our clients, you are further advised that the facsimile contains legally privileged and confidential information which we intended to send to the addressee only.

In any event, if you are not the intended recipient of the facsimile, you are hereby notified that you have received this facsimile inadvertently and in error. Any review, dissemination, distribution or copying of this is strictly prohibited. If you have received this in error, please immediately notify us by telephone and return the original facsimile to us at the address above via the United States Postal Service. We will reimburse any costs you incur in notifying us and returning the facsimile to us.

MESSAGE:

Dear Mr. Anderson:

Following are two public comments on the information presented at the March 29 public hearing on the Draft EIS for the Trinity Parkway project. Thank you very much for your consideration of these.

Austin
Dallas
Fort Worth
Houston
Richardson
San Angelo
San Antonio

Member of GLOBALAW™

ATTORNEYS & COUNSELORS
901 Main Street, Suite 6000
Dallas, Texas 75202
(214) 953-6000 • fax (214) 953-5822
www.jw.com

JW
JACKSON WALKER L.L.P.

Jonathan G. Vinson
(214) 953-5941
jvinson@jw.com

April 8, 2005

Via Telecopier and U.S.Mail

Mr. Christopher Anderson, Planning Director
North Texas Tollway Authority
5900 West Plano Parkway, Suite 100
P.O. Box 260729
Plano, Texas 75026

Re: Trinity Parkway -
Draft Environmental Impact Statement

Dear Mr. Anderson:

We are local land use counsel for Cargill, Inc. ("Cargill"), which owns and operates the warehouse and distribution facility located at 3196 Quebec Street in Dallas. Representatives from Cargill, including Mr. Patrick Williams, Terminal General Manager for Cargill's North America Sweeteners Division in Wayzata, Minnesota, and I attended the recent March 29 public hearing hosted by the North Texas Tollway Authority on the Draft Environmental Impact Statement for the Trinity Parkway project.

We understand from several conversations with Texas Department of Transportation and City of Dallas staff that rail access via the Union Pacific Railroad tracks from the south to the Cargill warehouse will almost certainly be interrupted in the next several years due to construction of the Trinity Parkway project. At the point in time that this rail access to Cargill's facility is actually interrupted, this facility will become essentially unusable.

Cargill believes that it should be made whole for this loss of access, either through some form of alternative rail access, probably from the north via a spur from the Union Pacific Mockingbird Yard so that they can continue to serve their customers, or some other form of economic compensation and/or relocation assistance. We look forward to continuing to work with NTTA, TXDOT, and City of Dallas officials and staff toward this end. Thank you for your consideration.

Austin
Dallas
Fort Worth
Houston
Richardson
San Angelo
San Antonio

Member of GLOBALAW

Very truly yours,

Jonathan Vinson

Jonathan G. Vinson

JGV:rr

cc: Patrick Williams
Chris Mugica
Bill Dahlstrom

3890980v.1

5:43

TRINITY PARKWAY
DRAFT ENVIRONMENTAL IMPACT STATEMENT
PUBLIC HEARING COMMENT FORM
MARCH 29, 2005 AT THE DALLAS CONVENTION CENTER

IMPORTANT
If you would like to receive newsletters and announcements as this study progresses, please make sure that you have completed an address information sheet. Visit the sign-in desk if you have any questions.

Your Name: Mr/Mrs H E Webb (Please print clearly)

Your Mailing Address: 4412 Beverly Dr
Dallas Tx
75205

The North Texas Tollway Authority (NTTA) is seeking your comments on the proposed project. We welcome your verbal and written comments. To be included in the project record, written comments must be submitted to the NTTA Office on or postmarked by April 8, 2005. All comments received will be given consideration. Please note you will not receive a direct written response to your comments or questions. Thank you for your comments *(To mail this form, fold in thirds and affix appropriate postage).*

General Comments, Concerns or Suggestions (i.e., alternatives, environmental concerns, and/or significant issues)

We are hoping this will pass and work will begin in 2005.

Mrs Webb

TRINITY PARKWAY
DRAFT ENVIRONMENTAL IMPACT STATEMENT
PUBLIC HEARING COMMENT FORM
MARCH 29, 2005 AT THE DALLAS CONVENTION CENTER

IMPORTANT
If you would like to receive newsletters and announcements as this study progresses, please make sure that you have completed an address information sheet. Visit the sign-in desk if you have any questions.

Your Name: JOE WELLS / DALLAS SIERRA CLUB (Please print clearly)

Your Mailing Address: 4243 HILL TOP LN
GRAND PRAIRIE, TX 75052

The North Texas Tollway Authority (NTTA) is seeking your comments on the proposed project. We welcome your verbal and written comments. To be included in the project record, written comments must be submitted to the NTTA Office on or postmarked by April 8, 2005. All comments received will be given consideration. Please note you will not receive a direct written response to your comments or questions. Thank you for your comments *(To mail this form, fold in thirds and affix appropriate postage).*

General Comments, Concerns or Suggestions (i.e., alternatives, environmental concerns, and/or significant issues)

WRITTEN COMMENTS SUBMITTED

AND REQUEST EXTENSION of Comment submission deadline.

1/7

Date: March 29,2005

To: North Texas Tollway Authority

From: Joe Wells, Dallas Sierra Club Representative Trinity Parkway CAWG
4243 Hill Top Ln, Grand Prairie, TX 75052

Subject: Comments on Trinity Parkway DEIS

The Dallas Regional Group of the Sierra Club is opposed to construction of high-speed limited access Toll Roads within the Dallas Trinity River Floodway.

The Trinity Parkway alternatives as proposed in the DEIS are sprawl inducing, air and water polluting, flood increasing, forest, park and neighborhood destroying, taxpayer money wasting 1950s approaches to addressing 21st Century Dallas transportation and development challenges.

The only alternative described in the Trinity Parkway DEIS that could be supported by the Dallas Sierra Club is the NO BUILD alternative.

Lack of Consideration of Other/Better Alternatives:

The DEIS lacks consideration of citizen proposed economically affordable, environmentally sustainable alternative land use strategies, transit alternatives and smaller scale enhancements for traffic flow along existing roadways including Industrial and Lamar Blvds. which would provide cost effective transportation relievers while fostering mixed use development, preserve affordable housing and neighborhoods and promote high quality growth and development for central and southern Dallas.

Public interest goals such as preservation of open space, improvement of air and water quality, establishment of a high quality recreational greenway along the Trinity River have all been secondary considerations to construction of 6-8 lanes of high speed Toll Roads within the Trinity Floodway. These public interest objectives should be evaluated equally with transportation improvements when the use of public resources (the Trinity River Corridor) is being determined.

The DEIS includes roadway alternatives to meet the goal of carrying 80,000 to 100,000 vehicle per day "while maintaining aesthetics." Project promoters have used the threat of placement of 6/8 lanes of Toll Road in adjacent neighborhoods and the taking businesses for right of way in West Dallas and along Industrial Blvd- as a means of coercing support for the Floodway location. No alternatives of any lesser scale transportation improvements outside of the floodway that might actually be seen as a benefit to high quality development were ever considered. If this remains the goal – Toll Roads to carry 80,000 to 100,000 vehicles per day- then once again planners will have determined the outcome of the planning without consideration of other equally important public objectives – including preservation of the Trinity River corridors' potential for park and recreation uses, as urban wildlife habitat, the importance if improving air and water quality and of stimulating smart growth –mixed use, mixed income high quality development – New Urbanism which will REDUCE VEHICLE USE, traffic congestion, air pollution rather than increase it.

2/1

Solving air pollution and traffic congestion by expanding highway capacity is like trying to solve obesity by loosening your belt- the problem feels better for a short time – but in the long term will get worse as a result!

This DEIS study should have evaluated needs, all costs economic and environmental – the consultants should have but have not recommended ways to REDUCE 80,000 – 100,000 vehicles per day (or at least a portion of this traffic)- Dallas needs new approaches which reduce single occupancy vehicle trips. By making this level of new traffic carrying capacity a requirement of this study we are back to the same process we have been stuck in for 10 years of meetings- project promoters have defined the problem and solution before the planning gets underway.

We continue to urge the evaluation of the attached consensus set of proposals.

Reconsidering Trinity River Project Priorities
A Big Vision of the little things that will make a big difference in people's lives

- Focus on preservation of the Trinity River's natural values to create a world class greenway,
- Scale back plans for highway and bridge construction to affordable scope,
- Reevaluate roadway improvements to a scale that will enhance access and economic redevelopment potential of adjacent land rather than pursuing the 8-lane limited-access toll road concept which promotes suburban growth and sprawl development at the expense of more sustainable and desirable "smart growth" in downtown and southern Dallas
- Choose non–structural flood control, voluntary buyout program for Cadillac Heights residents instead of environmentally-damaging levees and swales,
- Construct all roadway improvements or expansions outside of the Dallas Floodway in order to avoid damaging the Trinity River greenway's recreational assets and values,
- Choose transportation improvements that will enhance rather than damage adjacent economic development and access to Trinity greenway parks, trails, and river recreation,
- Promote planning to redevelop Industrial Blvd and Lamar (renamed Trinity Greenway Blvd.) into a "smart growth" corridor, that reflects "New Urbanism" values of mixed uses (retail, commercial offices, restaurants and mixed income housing), multi- model transportation (expanded traffic lanes and improved signalization and turn lanes, landscaped median, with enhancements including bike lanes, sidewalk pedestrian features which will connect with Trinity park access ways, DART and a Trinity Trolley extension of the McKinney Ave Trolley system connecting the West End via Industrial and a Trinity River Bridge (Houston St or other) to Jefferson Blvd in Oak Cliff) and that directs growth and redevelopment into Downtown and enhances neighborhoods in Oak Cliff, West and South Dallas neighborhoods rather than stimulating growth in outlying suburbs by construction of floodway toll roads,
- Fund small-scale environmental restoration and recreational projects including trails, wetland and forest restoration, river access points and floodplain clean up projects that are low cost to implement and to maintain.

3/7

Significant Omissions in DEIS:

The DEIS only considered land use as an effect of the future construction of various alternative Toll Road alignments. Nowhere in the DEIS is there consideration of land use planning as a growth management strategy that improves Dallas citizens access to housing, jobs recreation and commercial development and services by reducing their dependence on automobiles. Many cities are pursuing smart sustainable growth strategies that reduce reliance on automobile based transportation, while improving citizen's access to services and housing. Many cities are removing highway barriers within their downtowns to enhance pedestrian and transit access. With the Trinity Toll Road alternatives evaluated in this DEIS Dallas is not.

Failure to consider all connected components of Trinity Parkway:

The City of Dallas "Balanced Vision" Trinity Floodway Plan – is largely unfunded fantasy. Only one or two floodway portal Ramp access points to the planned floodway park and lakes are proposed for initial funding. The shallow conveyance basin lakes are essential elements of any Floodway Toll Road alignments but the DEIS defers hydraulic analysis of their effectiveness and therefore fails to adequately compare costs and impacts of all alternatives equally. Park access for any floodway alternatives road alignments will be very limited and unattractive to utilize for recreation – in view of the 100,000 vehicles using the adjacent 6 lane Toll Roads which due to significant adverse noise and visual impacts are not compatible with park and recreation uses.

This study should fully evaluate the all economic costs (construction and maintenance costs) of the projects as proposed so taxpayers will know what they are getting for their money. Accurate cost estimates for construction and maintenance have been hard to come by – but every time new cost information comes out – the staggering unfunded costs goes up! The projected costs for the City's Balanced Vision Floodway Plan is up to $1.75 Billion and growing. The DEIS fails to fully identify all the costs associated with the proposed NTTA Toll Roads, by omitting connected cost items including Calatrava Suspension Bridges, floodway conveyance lakes which relate to and affect the unevaluated hydraulic impacts, levee embankment construction, planned ramps and pedestrian access, storm water pollution prevention, thoroughfare interchanges, and toll plazas. The DEIS is vague and unclear and without specifics with respect to what is included in Trinity Parkway cost estimates and what is left out. Throughout the DEIS references to undefined cooperative jointly funded constructed portions of the project are referenced as possibilities, under the theory some entity other than NTTA will fund it or its unconnected to the Parkway. These connected components of the Trinity Parkway should be fully evaluated with respect to cost and social and environmental impacts in this DEIS not in some future Supplemental or Final EIS as is suggested in the DEIS.

Reference is made to the Trinity Parkway resulting in a 2 mph increase in the average speed of motorist driving within the highway network. Is the cost of nearly 1 Billion dollars a cost effective method to achieve this insignificant increase in speed, for those that can afford the $1 per trip toll? Cost effectiveness of these alternatives needs to be better defined and evaluated.

4/7

Deferral of Hydraulic analysis related to Floodway Toll Road alternatives:

No hydraulic analysis of floodway alternatives is provided in the DEIS. The DEIS states that this will be deferred until a Supplemental EIS if / when Floodway alternatives are chosen. This approach avoids consideration of comparison of significant costs and impacts related to the floodway alternatives as compared with the other alternative Toll Road alignments. If the purposes of this DEIS is to allow for comparison and selection of a preferred alternative decision makers should compare all the costs and impacts of each alternative studied as well as alternatives that have been rejected according to NEPA and Federal Highway Administration regulations.

Air Quality Impacts:

No analysis of the Trinity Parkways air quality impacts except with respect to it being listed within a regional air quality conformity plan. There needs to be a project specific analysis of the Trinity Parkways air emissions impacts. The amount of increased VOCs and Nox, which will be contributed to the regions' air quality non attainment problem as a result of this project when it is in operation, needs to be delineated and it is not. With vehicle trips and speeds already projected it should be possible to project VOCS and Nox released as a result of these motor vehicle trips. Vague assurances that whatever is emitted would be offset by decreases elsewhere in the region not withstanding.

Further a variety of accepted research has documented the air toxics impact on neighborhood residents who live next to high volume high speed roadways. There needs to an analysis of the air toxics impact on residents along the various alternatives. This is particularly true with respect to the Southern terminus of the proposed Trinity Parkway the Ideal Neighborhood that already has three major highways intersecting the neighborhood.

Water Pollution

There is a lack of specifics on how toxics released form accidental spills will be contained, as well as what pollution prevention measures will assure the non point roadway pollutants which will be released within the floodway adjacent to and within the Trinity River Floodway will not adversely affect water quality. The DEIS fails to provide detailed analysis of methods of control, estimates of impacts and mitigation measures and fails to specify the costs associated with Floodway Toll Road alternatives related to water pollution impacts, control and mitigation.

Environmental Justice

The Southern terminus Ideal neighborhood will suffer significant adverse impacts which include within the neighborhood, affecting home values, increasing noise, air toxics, reducing resident's safety and pedestrian accessibility within neighborhood, and increasing visual and physical barriers further dividing a neighborhood that already has more highways intersecting it than any other Dallas neighborhood.

Further, since the Trinity Parkway is proposed as a Toll Road with a projected $1 a trip toll and the possibility of requiring toll tags to reduce the size of toll collection facilities has been suggested, it is highly discriminatory in serving the needs of citizens who can

5/7

afford the luxury of paying the tolls. I highway for the wealthy who's costs and impacts social and environmental would be borne primarily by low income and minority residents of neighborhoods adjacent to its construction. Suburban commuters save a few minutes of commuting time, while urban residents suffer more pollution, noise and visual impacts in their neighborhoods and public recreation parks.

The adverse affects of competing commercial development, which the City of Dallas projects as a result of construction of the Trinity Parkway will destabilize and replace residential neighborhoods with affordable housing with, upscale commercial development. Tax value increases may cause further stresses on fixed income senior citizens who have resided in these neighborhoods for a long time and who will have difficulty finding comparable affordable housing in Dallas.

Parks and Open Space impacts on Floodway Parks

The Floodway Toll Road alternatives significantly adversely affect access to planned Floodway Parks and Lakes. The DEIS suggests only one or two pedestrian access ramps may be initially constructed within detailing who would fund their construction. Costs of these ramps are estimated at between $6 to $12 million or more in order to allow limited pedestrian access at only one or two points from the east side of the floodway across the Floodway Toll Roads to the planed parks and lakes and trails. Noise impacts on Floodway park users would be very significant as would visual impacts reducing the value for park and recreation uses of the floodway due to the proximity of high speed high volume limited access Toll Roads. Some intersections and connecting highway ramps would be elevated above the floodway according to the DEIS. The specifics of the placement of these ramps are vague as is their impacts.

Failure of NTTA and Consultant to address all connected project components in single EIS as required by NEPA and Federal Highway Administration regulations.

The entire MIS and EIS Process as conducted by TxDot and NTTA consultant has exhibited a tendency toward marketing Floodway Limited Access High Speed Roadways as the only way to address transportation needs. Consistently throughout the MIS and EIS the consultant minimizes the costs and impacts of the Floodway alternatives while overstating the benefits of its synergy with various parks, flood control projects planned and funded by others. This is an effort to avoid identification and analysis of the projects full and cumulative costs and impacts and fails to conform to NEPA requirements. Further it is deceptive for both decision makers and the public since it fails to fully document all project connected costs and to evaluate all project impacts. The approval of the DFE EIS prior to the Trinity Parkway EIS was part of the effort to segment connected project components so as to minimize environmental impacts and economic costs by separately evaluating components of a single project. Without the DFE in place it would not be possible for the consultant to claim no hydraulic impacts from Floodway Toll Road alternatives. The consultant makes this claim without befit of full hydraulic analysis in this DEIS. By segmentation of project components this DEIS fails to accomplish NEPA required identification and analysis of all impacts and costs

6/7

associated with Trinity Parkway alternatives and has not adequately allowed for consideration of more environmentally sustainable, economically cost effective and beneficial alternatives.

7/7

March 14, 2005

NTTA
P.O. Box 260729
Plano, TX 75026
Attn: Mr. Christopher Anderson.

Regarding the Draft Environmental Impact Statement of the Trinity Parkway, please extend the comment period beyond the Friday, April 8, 2005 deadline.

The document is over 800 pages in length. The present deadline does not allow sufficient time to study the document's contents properly and prepare an adequate response.

Further, due to NTTA arbitrary decision not to distribute to Environmental Organizations hard copies of the DEIS I've not been able to obtain a hard copy until today (as a result of assistance from Members of the State Legislature) Copies were distributed to project proponents Business organizations several weeks ago free of charge.

Please notify me of any extension of the public comment period.

Respectfully submitted,

Joe Wells

Joe Wells
Dallas Sierra Club Rep. Trinity Pkwy CAC
4243 Hill Top Ln
Grand Prairie, Tx 75052

RECEIVED
MAR 2005
Helff

RECEIVED
MAR 18 2005
NORTH TEXAS TOLLWAY AUTHORITY

SAVE OPEN SPACE
P. O. Box 670782
Dallas, Texas 75367

2004-2005 Board of Directors

J. Mark Wolf, President
Linda Sharp, Vice-President
Bob Curry, Corresponding Sec.
Charles Allen, Secretary
Charles Briner, Treasurer

Holly Baker
Arlene Beasley
Paula Blackmon
Kathlyn Gilliam
David Gray
Walton Haynes
Joanne Hill
Susan Jackson
Neely Kerr
Jack Luby
Annie Melton
Bud Melton
Pat Melton
Sarah Moore
Linda Pelon
James Pratt
Joseph Rende
Mary Vogelson
Kay Wilde

Advisory Board

Lorlee Bartos
Walter Dahlberg
Sally Drews
Lynda Ender
Tad Helmburger
Joan Howell
Phil Huey
Adena Jarvis
Mary Nash Stoddard
Susan Taylor
Dan Weiser
Gloria Wise

RECEIVED
APR 1 1 2005
NORTH TEXAS TOLLWAY AUTHORITY

Post Mark 4/8/05

April 08, 2005

Mr. Christopher Anderson
North Texas Tollway Authority
P.O. Box 260729
Address
Plano, TX 75026

Re: Trinity Parkway Reliever Route

Dear Mr. Anderson:

Our organization has been a positive force in advocating for open space and the stewardship of the environment as integral elements of urban growth for the past 29 years. Unfortunately, during that time the Trinity River Corridor (TRC) has largely remained an unrealized asset for the City of Dallas. We wholly support a vision for the TRC that enhances its value as a public amenity, a recreational opportunity, and catalyst for public and private development along each bank of the river.

However, because of the following outstanding issues (though not exclusively) we cannot support approval of a roadway alignment *within the levees* (three of the Alternates) based on the available public documents.

- Do engineering studies to date conclude that a roadway located within the floodway will not increase the potential for flooding, and if yes, what are the mitigating features within the overall floodway design?
- Is there a precedent to create a public roadway in a floodway that captures and handles storm water to Federal Clean Water Act standards? Is this technically and economically feasible?
- Do engineering studies to date conclude that a roadway located within the floodway will not increase the velocity of floodwaters (and therefore damage) to the Great Trinity Forest?
- Has public access (pedestrian and other non-motorized) to the proposed parks and lakes been conclusively shown to be feasible, or is the roadway configuration realistically a continuous obstacle?
- How will a roadway configuration within the floodway be viable (relative to cost and design standards) with respect to the existing sump facilities and existing bridges (that remain)? Is pedestrian cross-access further complicated?

The few questions offered above and most importantly the lack of a *fully integrated* evaluation of the impacts of a roadway alignment leads SOS to not support a roadway alignment and configuration (associated with the levees) at this time. Similarly, the Split Parkway Landside alternate (with crossovers) raises some of the same concerns noted above.

From a broader perspective is any Trinity Parkway Reliever Route within or on the levees truly cost-justified when taking the benefits of Project Pegasus into consideration? Similarly, is there convincing justification for a reliever route at this location relative to the reoccurring air quality issue (non-attainment status) for North Texas?

Therefore we remain concerned that it would defy logic and civic responsibility on the part of the City to base a *build* decision on less than a more fully integrated assessment.

Respectively,

J. Mark Wolf
President
Save Open Space

cc: Councilmembers, City of Dallas

NTTA_1

Mixmaster Business Association
6060 North Central Expressway
Suite 333 Dallas, Texas 75206-5204
214-739-4025 Fax 214-739-4026
E-mail: mba@advico.com

RECEIVED
APR 2005
Halff

April 7, 2005

Mr. Christopher Anderson, Planning Director
North Texas Tollway Authority
P. O. Box 260729
Plano, TX 75026

RE: Trinity Parkway Draft Environmental Impact Statement

Dear Mr. Anderson:

This letter is written in support of the Trinity Parkway construction. Specifically we prefer Alternative 4, Split Riverside Parkway because of its better access to and from adjoining streets and neighborhoods. We believe this provides the best alternative for economic development for both sides of the river corridor.

Our second choice would be Alternative 3B, Combined Parkway Modified, but there are concerns which have not been fully addressed. Specifically, the roadway design and funding for the needed improvements to Industrial Boulevard have not been completed. Also, there is concern that the lack of access for southbound traffic on the Parkway at every entry point may hurt not only the Mixmaster area, but southern communities as well.

Our greatest concern is about the number of Parkway lanes to be initially constructed. We believe there must be three lanes open in each direction south of Continental before any of the Project Pegasus right of way utility relocation or roadway construction begins. If such lanes are not open when Project Pegasus traffic impacts begin, travelers will experience greatly increased congestion and delays on the Interstate, federal, and state highways – along with Parkway travelers, particularly whose heading south in the afternoon rush hours, who must merge from three lanes to only two lanes if the Parkway is not fully constructed south of Continental.

Best wishes in obtaining actual construction funding and authorization for the Trinity Parkway as soon as possible. It is badly needed.

Sincerely,

Mixmaster Business Association

Marcus Wood
Executive Vice President

MW/s

RECEIVED
APR 1 1 2005
NORTH TEXAS TOLLWAY AUTHORITY

Post Mark - 4/7/05

THE FOLLOWING IS A TRANSLATION FROM A FORM SUBMITTED

THAT WAS WRITTEN IN SPANISH

APR-13-2005 07:34 FROM:TOLLWAY AUTHORITY 2145284826 TO:2142731387 P.2/7

TRINITY PARKWAY
DOCUMENTO BORRADOR DE LA DECLARACION DE IMPACTO AMBIENTAL
FORMULARIO PARA COMENTARIOS DE LA AUDIENCIA PUBLICA
29 DE MARZO DE 2005 EN EL DALLAS CONVENTION CENTER

Nombre: KARIM ZINDANI (LETRA IMPRENTA POR FAVOR)

Dirección: 359 S. Industrial Blvd.
Dallas Tx 75207.

IMPORTANTE

Si usted desea recibir información y anuncios según progrese este documeto, por favor complete sus datos en la hoja de registro. Tenga a bien pasar por la mesa de entrada para la atención de sus inquietudes.

RECEIVED
APR 1 1 2005
NORTH TEXAS TOLLWAY AUTHORITY

We attended the meeting in March-29-2005 and after listening and discussing the different plans with the officials,

The following are our suggestions and worries:

1. The only plan that we believe is good for the city is 3A or 3B

2. This plan is the most inexpensive.

3. It costs half of the other plans.

4. It shows less residential and commercial properties.

5. It looks good next to the Trinity River.

6. Other plans especially at Industrial Blvd. looked ugly and "bother the eye." After I can see a light rail system passing by the highway in New York and Chicago and it cost more to build and maintain.

7. We disagree with any plan over Industrial Blvd or any other road

TRINITY PARKWAY
DOCUMENTO BORRADOR DE LA DECLARACION DE IMPACTO AMBIENTAL
FORMULARIO PARA COMENTARIOS DE LA AUDIENCIA PUBLICA
29 DE MARZO DE 2005 EN EL DALLAS CONVENTION CENTER

IMPORTANTE

Si usted desea recibir información y anuncios según progrese este documeto, por favor complete sus datos en la hoja de registro. Tenga a bien pasar por la mesa de entrada para la atención de sus inquietudes.

RECEIVED
APR 11 2005
NORTH TEXAS TOLLWAY AUTHORITY

Post Mark 4/7/05

Nombre: KARIM ZINDANI (LETRA IMPRENTA POR FAVOR)

Dirección: 359 S. Industrial Blvd
Dallas Tx 75207.

La Autoridad del Norte de Texas para Autopistas por Peaje (NTTA) solicita sus comentarios acerca del proyecto propuesto. Son bienvenidos sus comentarios tanto verbales como escritos. Para ser incluidos en el archive del proyecto, los comentarios escritos deberán ser entregados en la Oficina NTTA en o estar sellados por el correo a no mas tardar para el 8 de abril de 2005. Todos los comentarios recibidos se someterán a consideración. Por favor tenga en cuenta que usted no recibirá respuestas por escrito dirigidas directamente a usted por sus comentarios o preguntas. Gracias por sus comentarios *(Para enviar este formulario por correo, por favor doble en tres y coloque la estampilla correspondiente).*

Comentarios Generales, Interrogantes or Sugerencias (por ejemplo: alternativas, interrogantes ambientales, y/o temas significativos)

Nosotros atendimos a la junta en Marzo-29-2005 y despues de escuchar y discutir los diferentes planes con los oficiales, A lo siguiente siguen nuestras sugerencias y preocupaciones.
1. El unico plan que nosotros creemos que es bueno para la ciudad es 3A y o 3B.
2. Este plan es el mas barato.
3. Cuesta la mitad que otros planes.
4. Enseña menos. Propiedades residenciales y comerciales.
5. Se mira bien a lado del rio trinity.
6. Otros planes especialmente en la Industrial blvd se miraran feos y "molestaran el ojo" despues como yo puedo veer un sistema de subway pasando sobre carreteras en Nueva York y Chicago y cuesta mas para construir y cuidar.
7. Nosotros no estamos de acuerdo ningun plan sobre la Industrial Blvd o alguna otra Camino

Gracias

Sinceramente,
Mchmoud
c/o Kwick Stop Centers
359 S. Industrial blvd
Tel # 214 749-0839

RECEIVED
APR 2005
Halff

KWICK STOP CENTRES.
KARIM ZINDANI.
359. S. Industrial Blvd.
DALLAS TX

THIS PAGE INTENTIONALLY LEFT BLANK

APPENDIX G-6

CORRESPONDENCE

THIS PAGE INTENTIONALLY LEFT BLANK

APPENDIX G-6. Correspondence

This section supplements the information contained in **Appendix A-1** by adding copies of formal correspondence with public resource agencies. Formal comments as part of each agency's review of the DEIS that are already included in **Appendix G-5** of this document are not repeated here. The following agency correspondence items are added to the items in the Contents List for **Appendix A-1, pages 1-3**.

CORRESPONDENCE

Agency	Address	Date Sent	Correspondence Summary	Date of Response	Response	App. G-6 Pages
U.S. Army Corps of Engineers (USACE)	Michael J. Mocek Deputy District Engineer, USACE Fort Worth District PO Box 17300, Fort Worth, TX 76102-0300	05-10-05	NTTA provided information about expected mitigation planning for wetland areas	No written response	USACE responded verbally in several meetings held during June-September, 2005	3-11
USACE	William Fickel, Jr. Chief, Environmental Division, USACE (CESWF-EV) Fort Worth District PO Box 17300, Fort Worth, TX 76102-0300	07-26-05	FHWA made second request for USACE to be a cooperating agency	9-21-05 11-15-05	Agreed to become a cooperating agency and provided additional comments on the DEIS Additional response received from Deputy District Engineer outlining USACE's comments on the DEIS	12-13 14-28 29-30
USACE	Wayne A. Lee, Environmental Division, USACE (CESWF-EV) Fort Worth District PO Box 17300, Fort Worth, TX 76102-0300	06-19-06	Provided information regarding approved Jurisdictional Determination	6-19-06	Approved Jurisdictional Determination	31-36
NTTA	Addressed Honorable Laura Miller, Mayor, City of Dallas, 1500 Marilla Street, Dallas, TX 75201	04-04-07	Summary of NTTA's position with respect to USACE concerns	N/A	N/A	37-39
USACE	Addressed Honorable Laura Miller, Mayor, City of Dallas, 1500 Marilla Street, Dallas, TX 75201	04-30-07	Provided information regarding current USACE policy pertaining to Federal flood protection projects.	N/A	N/A	40-42
Dallas Zoo	650 South R.L. Thornton Freeway, Dallas, TX 75203	12-04-07	Provided information regarding nesting potential for the interior least tern in the project study area, but indicated no recorded sightings	N/A	N/A	43

Agency	Address	Date Sent	Correspondence Summary	Date of Response	Response	App. G-6 Pages
TxDOT	Dewitt C. Greet State Highway Building 125 E. 11th Street Austin, TX 78701	01-30-08	TxDOT coordination with FHWA of request for exemption from navigable waterway requirements	NA	NA	44-45
U.S. Coast Guard (USCG)	David M. Frank 500 Poydras Street, Room 1313 New Orleans, LA 70130-3310	11-13-08	Exemption from USCG permit requirements for crossings over the Trinity River	NA	NA	46
FHWA	300 E. 8th Street, Room 826 Austin, TX 78701	02-02-09	Section 4(f) determination for Trinity River Greenbelt Park	NA	NA	47-48

NORTH TEXAS TOLLWAY AUTHORITY

5900 W. Plano Parkway, Suite 100, Plano, TX 75093
P.O. Box 260729, Plano, TX 75026
214.461.2000 Fax 214.528.4826

May 10, 2005

Mr. Michael J. Mocek, P.E. Deputy District Engineer
US Army Corps of Engineers, Fort Worth District
P.O. Box 17300
Fort Worth, Texas 76102-0300

RE: Trinity Parkway Draft EIS
April 20, 2005 Transmittal of USACE Comments

Dear Mr. Mocek:

Thank you for your April 20, 2005 letter transmitting Fort Worth District written comments on the Draft EIS for Trinity Parkway. NTTA appreciates the time and care which went into the District review of the Parkway DEIS. We also would like to thank Fort Worth District staff for the ongoing collaboration with NTTA on the Trinity Parkway project and related projects in the Parkway Corridor.

Subsequent to the March 29, 2005 Public Hearing for the Parkway DEIS, the Dallas City Council on April 13 affirmed support for the proposed Trinity Parkway project, and recommended Alternative Alignment 3B, Combined Parkway - Modified as the locally preferred alignment. On April 20, The NTTA Board of Directors similarly recommended Alternative 3B as the locally-preferred alternative. Both of these actions are interim, since identification of a preferred alternative is expected to follow steps outlined in the January 29, 2003 Strategy for Development of the Trinity Parkway Draft Environmental Impact Statement (attached). Final endorsement of a preferred alternative would not occur until after full review of supplemental USACE environmental studies for related Dallas Floodway actions, which may be a part of the subsequent NEPA documentation for the Trinity Parkway.

Your April 20, 2005 letter requests information on the location of mitigation features related to Trinity Parkway so that Fort Worth District can begin plan formulation and preparation of a supplement to the Trinity Parkway DEIS. We have reviewed the "Baseline" hydraulic model prepared on behalf of the City of Dallas by the firm CDM, and discussed with Gene Rice and David Wilson of USACE at a meeting at the Fort Worth District Office on April 14. This model is intended to depict an interim excavation and embankment plan, sufficient to support construction of the Trinity Parkway embankments. Related to this plan, we wish to transmit the following drawings:

- Figure 1. This is a map of the Baseline model. We have identified nine borrow sites ("A"-"T") that NTTA would intend to use to produce sufficient earth fill to construct the Trinity Parkway Embankments for the Riverside Alternatives 3A (Combined Original), 3B (Combined Modified) and 4 (Split Riverside). We are assuming that the other DEIS Alternatives 2A (Industrial Elevated), 2B (Industrial At-Grade) and 5 (Split Landside) would not require borrow of embankment fill from the Floodway.

David D. Blair, Jr., *Chairman* • Jack Miller, *Vice Chairman* • Donald D. Dillard • William W. Meadows • Alan E. Sims • Paul N. Wageman • Kay Walls
Allan Rutter, *Executive Director* • Ruby Franklin, *Secretary* • Susan A. Buse, *Treasurer*

- Figure 2 - This figure overlays borrow sites A-I on the latest jurisdictional waters determination for the Dallas Floodway. This delineation was submitted on April 19, 2005 and is currently under review by USACE Fort Worth District. The figure also shows the embankment area ("Z") needed for the Combined Parkway Alternatives 3A and 3B.
- Figure 3 - This figure similarly shows borrow sites A-I and embankment areas X, Y and Z needed for the Split Parkway Riverside Alternative 4.

Comments on Combined Parkways (Alts 3A, 3B): The Combined Parkway embankment totals 5,000,000 cubic yards, exclusive of shrinkage. (This is assumed to be the same for Alts 3B and 3B.) The calculated volume assumes filling the new embankment up to the road level, and includes additional fill required to offset the road embankment approximately 24 feet from the riverside face of the levee to allow for a future levee raise. The following table summarizes the borrow site volumes and the impacts on waters of the U.S.:

Borrow Site/ Embankment	Affected Area (Ac)	Assumed Depth (ft)	Borrow Site Volume (CY)	Waters of the U.S. Impacted (Ac)
A	21.0	8.0	251,000	5.0
B	26.3	8.0	319,000	1.0
C	73.2	13.0	1,404,000	6.7
D	92.3	14.0	1,856,000	2.9
E	14.5	25.0	324,000	4.5
F	27.4	14.0	476,000	2.9
G	15.3	12.0	233,000	4.8
H	8.0	12.0	116,000	0.0
I	28.2	14.0	497,000	0.2
Z	152.0	-	Embankment	17.5
Totals	458.2		5,476,000	45.5

Comments on Split Parkway Riverside (Alt 4): The Split Parkway Riverside embankment totals 5,700,000 cubic yards, exclusive of shrinkage, and includes a similar 24-foot offset to both east and west levees to allow for a future levee raise. The following table summarizes the borrow site volumes and the impacts on waters of the U.S.:

Borrow Site/ Embankment	Footprint Area (Ac)	Assumed Depth (ft)	Borrow Site Volume (CY)	Waters of the U.S. Impacted (Ac)
A	21.0	13.0	398,000	5.0
B	26.3	13.0	506,000	1.0
C	73.2	15.0	1,604,000	6.7
D	92.3	14.0	1,856,000	2.9
E	14.5	25.0	324,000	4.5
F	27.4	14.0	476,000	2.9
G	15.3	12.0	233,000	4.8
H	8.0	12.0	116,000	0.0
I	28.2	14.0	497,000	0.2
X	60.0		Embankment	9.1
Y	13.3		Embankment	0.2
Z	102.4		Embankment	7.8
Total	482.0		6,010,000	45.1

Figures 4 and 4A show a proposed wetland mitigation area located between Hampton and Westmoreland Roads and identified as the "Hamptons Wetland" in the City of Dallas Balanced Vision Plan. The site as outlined contains approximately 110 acres of land area with very little existing wetlands. Based on the tables above, NTTA proposes to provide replacement wetlands within this identified area, being 45.5 acres of new constructed wetlands to replace the impacts of Combined Parkway Alternatives 3A and 3B, and 45.1 acres of new constructed wetlands to replace the impacts of Split Parkway Riverside Alternative 4.

The proposed wetland mitigation area will be designed to provide the same type of functions and values as exist in the wetlands being impacted by the Trinity Parkway. A refined wetland mitigation plan will be developed with coordination, input and review by the USACE. NTTA has also received requests from US Fish and Wildlife Service and Texas Parks and Wildlife Department regarding coordination of wetland mitigation plans. Accordingly, these agencies will also be invited to participate in the development of the mitigation plan.

In addition to wetland impacts, the proposed borrow sites A-I will result in loss of trees within the affected areas. The Trinity River has a narrow wooded corridor on both sides of the main channel along most of the Dallas Floodway reach. From the Elm Fork/West Fork confluence to Jefferson St., the corridor is up to 50 feet wide on both sides of the channel, with tree species predominantly Cottonwood or Black Willow and sizes ranging from small saplings to over 20-inch diameter. Beginning at Jefferson Street and continuing downstream to the DART bridge, the wooded corridor is noticeably narrower, mostly due to activities associated with the Trinity

River desiltation project (USACE Project #199300146). The wooded corridor in this area ranges up to 30 feet wide, with small Black Willow trees and saplings representing almost all of the species present. The proposed borrow sites A-I affect 11,500 feet of river bank and are estimated to impact 11.2 acres of tree cover. NTTA proposes to provide 11.2 acres of trees to restore the trees lost due to the borrow site excavation. Final location of these replacement trees will be subject to coordination with USACE and the City of Dallas. These locations could be on the riverside embankment slopes of the proposed Parkway, or on other agreed locations, such as within the Hamptons Wetland mitigation area or on edges of future proposed meanders in the river channel.

The cost to construct the replacement wetlands and plant the tree mitigation areas will be developed and refined with agency input. At this point, the wetland and tree mitigation is preliminarily estimated to cost $650,000.00 an amount which is assumed to be already included in the mitigation allowances ($5 million) in the DEIS preliminary cost estimates.

The NTTA proposes to apply for an Individual Section 404 Permit utilizing the NEPA/Section 404 Permit Merger with the Draft and Supplemental EIS as the 404 Application for the Corps. The NEPA/Section 404 Permit Merger has been established as official policy for U.S. DOT, EPA, and USACE initiatives to improve the regulation and reduce inefficiencies under Section 404. NTTA, TxDOT, and FHWA are committed to expanding interagency coordination to further streamline the NEPA process.

Finally, your April 20 letter proposes a further meeting between staffs to discuss the agencies' comments and concerns. We have scheduled a meeting on Wednesday, May 11 at the NTTA Office with USACE Fort Worth District, FHWA, TxDOT, and EPA staff in attendance. If you have any further questions or comments on this matter, please do not hesitate to call me at 214.461.2021 or email me at canderson@ntta.org.

Sincerely,

Christopher Anderson
Planning Director

cc: Ms. Anita Wilson, FHWA
Mr. Mike Jansky, EPA
Mr. Dan Perge, TxDOT
Ms. Rebecca Dugger, City of Dallas
Mr. Frederick W. Addison, III, J.D., Locke, Liddell, and Sapp
David Morgan, Halff Associates
Engineering

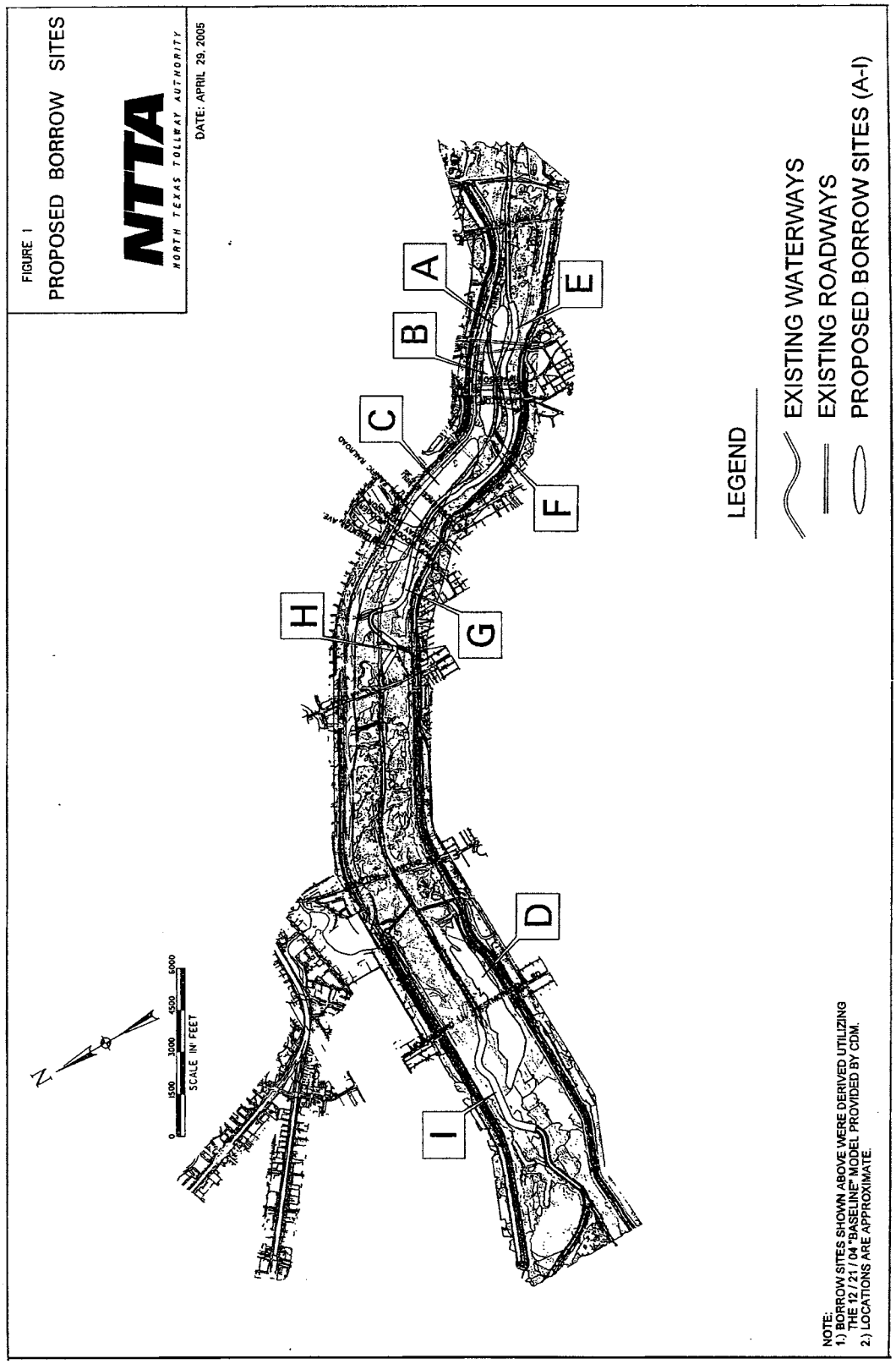
FIGURE 1
PROPOSED BORROW SITES
NTTA
NORTH TEXAS TOLLWAY AUTHORITY
DATE: APRIL 29, 2005
A
B
C
D
E
F
G
H
I
LEGEND
EXISTING WATERWAYS
EXISTING ROADWAYS
PROPOSED BORROW SITES (A-I)
N
0
1500
3000
4500
6000
SCALE IN FEET
NOTE:
1.) BORROW SITES SHOWN ABOVE WERE DERIVED UTILIZING THE 12/21/04 "BASELINE" MODEL PROVIDED BY CDM.
2.) LOCATIONS ARE APPROXIMATE.

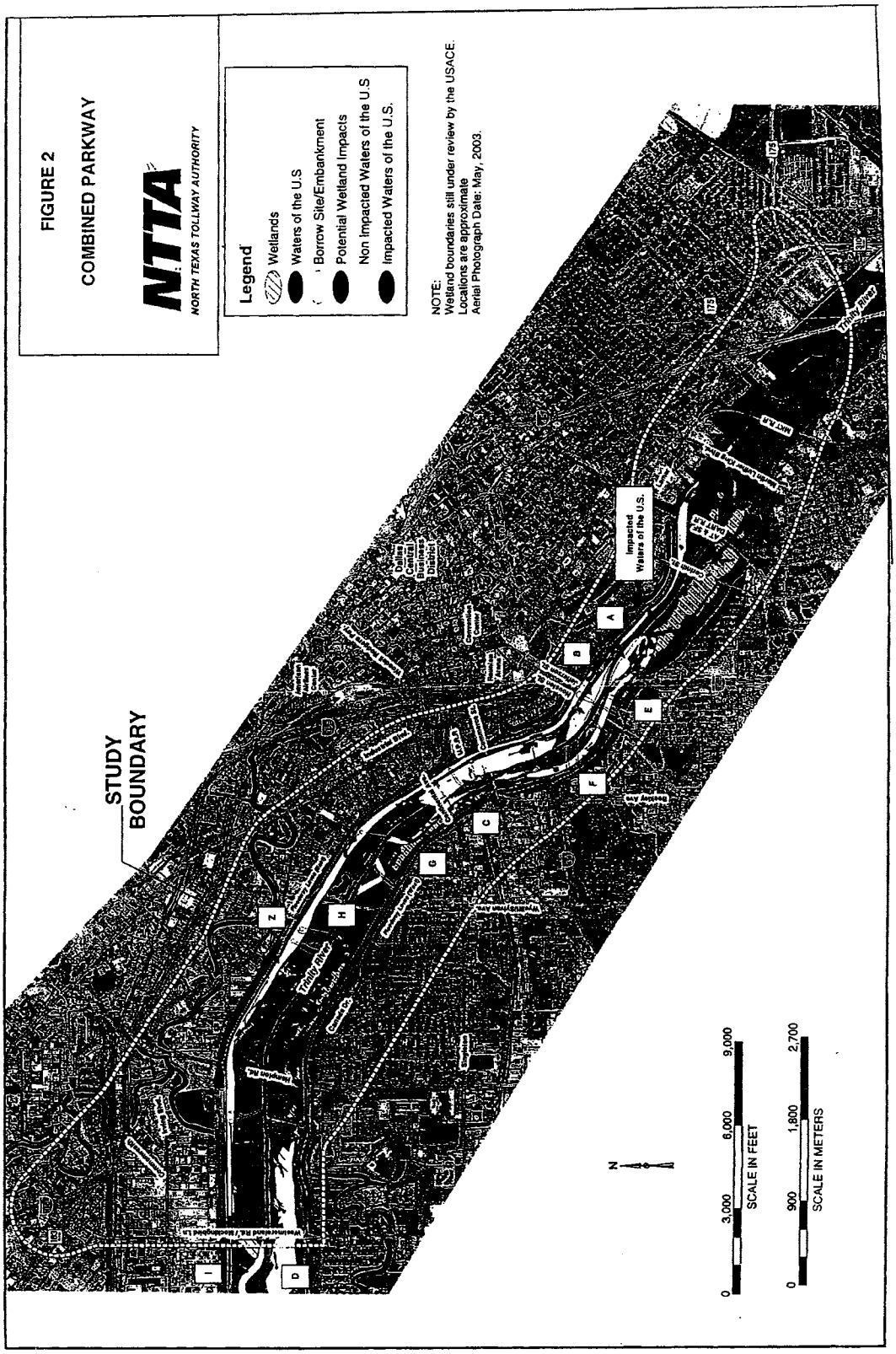
FIGURE 2
COMBINED PARKWAY
NTTA
NORTH TEXAS TOLLWAY AUTHORITY
Legend
Wetlands
Waters of the U.S
Borrow Site/Embankment
Potential Wetland Impacts
Non Impacted Waters of the U.S
Impacted Waters of the U.S.
NOTE:
Wetland boundaries still under review by the USACE.
Locations are approximate
Aerial Photograph Date: May, 2003.
STUDY BOUNDARY
Impacted Waters of the U.S.
Trinity River
Dallas County Utility District
Westmoreland Rd./Hampton Rd.
Lake Ray Hubbard
Lake Ray Hubbard Dam
Lake Ray Hubbard Dam Spillway
Lake Ray Hubbard Dam Spillway Channel
Lake Ray Hubbard Dam Spillway Channel Bridge
Lake Ray Hubbard Dam Spillway Channel Bridge Abutment
Lake Ray Hubbard Dam Spillway Channel Bridge Abutment Wing Wall
Lake Ray Hubbard Dam Spillway Channel Bridge Abutment Wing Wall Footing
Lake Ray Hubbard Dam Spillway Channel Bridge Abutment Wing Wall Footing Pier
Lake Ray Hubbard Dam Spillway Channel Bridge Abutment Wing Wall Footing Pier Column
Lake Ray Hubbard Dam Spillway Channel Bridge Abutment Wing Wall Footing Pier Column Cap
Lake Ray Hubbard Dam Spillway Channel Bridge Abutment Wing Wall Footing Pier Column Cap Deck
Lake Ray Hubbard Dam Spillway Channel Bridge Abutment Wing Wall Footing Pier Column Cap Deck Girder
Lake Ray Hubbard Dam Spillway Channel Bridge Abutment Wing Wall Footing Pier Column Cap Deck Girder Beam
Lake Ray Hubbard Dam Spillway Channel Bridge Abutment Wing Wall Footing Pier Column Cap Deck Girder Beam Pile
Lake Ray Hubbard Dam Spillway Channel Bridge Abutment Wing Wall Footing Pier Column Cap Deck Girder Beam Pile Foundation
Lake Ray Hubbard Dam Spillway Channel Bridge Abutment Wing Wall Footing Pier Column Cap Deck Girder Beam Pile Foundation Pier
Lake Ray Hubbard Dam Spillway Channel Bridge Abutment Wing Wall Footing Pier Column Cap Deck Girder Beam Pile Foundation Pier Column
Lake Ray Hubbard Dam Spillway Channel Bridge Abutment Wing Wall Footing Pier Column Cap Deck Girder Beam Pile Foundation Pier Column Cap
Lake Ray Hubbard Dam Spillway Channel Bridge Abutment Wing Wall Footing Pier Column Cap Deck Girder Beam Pile Foundation Pier Column Cap Deck
Lake Ray Hubbard Dam Spillway Channel Bridge Abutment Wing Wall Footing Pier Column Cap Deck Girder Beam Pile Foundation Pier Column Cap Deck Girder
Lake Ray Hubbard Dam Spillway Channel Bridge Abutment Wing Wall Footing Pier Column Cap Deck Girder Beam Pile Foundation Pier Column Cap Deck Girder Beam
Lake Ray Hubbard Dam Spillway Channel Bridge Abutment Wing Wall Footing Pier Column Cap Deck Girder Beam Pile Foundation Pier Column Cap Deck Girder Beam Pile
Lake Ray Hubbard Dam Spillway Channel Bridge Abutment Wing Wall Footing Pier Column Cap Deck Girder Beam Pile Foundation Pier Column Cap Deck Girder Beam Pile Foundation
Lake Ray Hubbard Dam Spillway Channel Bridge Abutment Wing Wall Footing Pier Column Cap Deck Girder Beam Pile Foundation Pier Column Cap Deck Girder Beam Pile Foundation Pier
Lake Ray Hubbard Dam Spillway Channel Bridge Abutment Wing Wall Footing Pier Column Cap Deck Girder Beam Pile Foundation Pier Column Cap Deck Girder Beam Pile Foundation Pier Column
Lake Ray Hubbard Dam Spillway Channel Bridge Abutment Wing Wall Footing Pier Column Cap Deck Girder Beam Pile Foundation Pier Column Cap Deck Girder Beam Pile Foundation Pier Column Cap
Lake Ray Hubbard Dam Spillway Channel Bridge Abutment Wing Wall Footing Pier Column Cap Deck Girder Beam Pile Foundation Pier Column Cap Deck Girder Beam Pile Foundation Pier Column Cap Deck
Lake Ray Hubbard Dam Spillway Channel Bridge Abutment Wing Wall Footing Pier Column Cap Deck Girder Beam Pile Foundation Pier Column Cap Deck Girder Beam Pile Foundation Pier Column Cap Deck Girder
Lake Ray Hubbard Dam Spillway Channel Bridge Abutment Wing Wall Footing Pier Column Cap Deck Girder Beam Pile Foundation Pier Column Cap Deck Girder Beam Pile Foundation Pier Column Cap Deck Girder Beam
Lake Ray Hubbard Dam Spillway Channel Bridge Abutment Wing Wall Footing Pier Column Cap Deck Girder Beam Pile Foundation Pier Column Cap Deck Girder Beam Pile Foundation Pier Column Cap Deck Girder Beam Pile
Lake Ray Hubbard Dam Spillway Channel Bridge Abutment Wing Wall Footing Pier Column Cap Deck Girder Beam Pile Foundation Pier Column Cap Deck Girder Beam Pile Foundation Pier Column Cap Deck Girder Beam Pile Foundation
Lake Ray Hubbard Dam Spillway Channel Bridge Abutment Wing Wall Footing Pier Column Cap Deck Girder Beam Pile Foundation Pier Column Cap Deck Girder Beam Pile Foundation Pier Column Cap Deck Girder Beam Pile Foundation Pier
Lake Ray Hubbard Dam Spillway Channel Bridge Abutment Wing Wall Footing Pier Column Cap Deck Girder Beam Pile Foundation Pier Column Cap Deck Girder Beam Pile Foundation Pier Column Cap Deck Girder Beam Pile Foundation Pier Column
Lake Ray Hubbard Dam Spillway Channel Bridge Abutment Wing Wall Footing Pier Column Cap Deck Girder Beam Pile Foundation Pier Column Cap Deck Girder Beam Pile Foundation Pier Column Cap Deck Girder Beam Pile Foundation Pier Column Cap
Lake Ray Hubbard Dam Spillway Channel Bridge Abutment Wing Wall Footing Pier Column Cap Deck Girder Beam Pile Foundation Pier Column Cap Deck Girder Beam Pile Foundation Pier Column Cap Deck Girder Beam Pile Foundation Pier Column Cap Deck
Lake Ray Hubbard Dam Spillway Channel Bridge Abutment Wing Wall Footing Pier Column Cap Deck Girder Beam Pile Foundation Pier Column Cap Deck Girder Beam Pile Foundation Pier Column Cap Deck Girder Beam Pile Foundation Pier Column Cap Deck Girder
Lake Ray Hubbard Dam Spillway Channel Bridge Abutment Wing Wall Footing Pier Column Cap Deck Girder Beam Pile Foundation Pier Column Cap Deck Girder Beam Pile Foundation Pier Column Cap Deck Girder Beam Pile Foundation Pier Column Cap Deck Girder Beam
Lake Ray Hubbard Dam Spillway Channel Bridge Abutment Wing Wall Footing Pier Column Cap Deck Girder Beam Pile Foundation Pier Column Cap Deck Girder Beam Pile Foundation Pier Column Cap Deck Girder Beam Pile Foundation Pier Column Cap Deck Girder Beam Pile
Lake Ray Hubbard Dam Spillway Channel Bridge Abutment Wing Wall Footing Pier Column Cap Deck Girder Beam Pile Foundation Pier Column Cap Deck Girder Beam Pile Foundation Pier Column Cap Deck Girder Beam Pile Foundation Pier Column Cap Deck Girder Beam Pile Foundation
Lake Ray Hubbard Dam Spillway Channel Bridge Abutment Wing Wall Footing Pier Column Cap Deck Girder Beam Pile Foundation Pier Column Cap Deck Girder Beam Pile Foundation Pier Column Cap Deck Girder Beam Pile Foundation Pier Column Cap Deck Girder Beam Pile Foundation Pier
Lake Ray Hubbard Dam Spillway Channel Bridge Abutment Wing Wall Footing Pier Column Cap Deck Girder Beam Pile Foundation Pier Column Cap Deck Girder Beam Pile Foundation Pier Column Cap Deck Girder Beam Pile Foundation Pier Column Cap Deck Girder Beam Pile Foundation Pier Column
Lake Ray Hubbard Dam Spillway Channel Bridge Abutment Wing Wall Footing Pier Column Cap Deck Girder Beam Pile Foundation Pier Column Cap Deck Girder Beam Pile Foundation Pier Column Cap Deck Girder Beam Pile Foundation Pier Column Cap Deck Girder Beam Pile Foundation Pier Column Cap
Lake Ray Hubbard Dam Spillway Channel Bridge Abutment Wing Wall Footing Pier Column Cap Deck Girder Beam Pile Foundation Pier Column Cap Deck Girder Beam Pile Foundation Pier Column Cap Deck Girder Beam Pile Foundation Pier Column Cap Deck Girder Beam Pile Foundation Pier Column Cap Deck
Lake Ray Hubbard Dam Spillway Channel Bridge Abutment Wing Wall Footing Pier Column Cap Deck Girder Beam Pile Foundation Pier Column Cap Deck Girder Beam Pile Foundation Pier Column Cap Deck Girder Beam Pile Foundation Pier Column Cap Deck Girder Beam Pile Foundation Pier Column Cap Deck Girder
Lake Ray Hubbard Dam Spillway Channel Bridge Abutment Wing Wall Footing Pier Column Cap Deck Girder Beam Pile Foundation Pier Column Cap Deck Girder Beam Pile Foundation Pier Column Cap Deck Girder Beam Pile Foundation Pier Column Cap Deck Girder Beam Pile Foundation Pier Column Cap Deck Girder Beam
Lake Ray Hubbard Dam Spillway Channel Bridge Abutment Wing Wall Footing Pier Column Cap Deck Girder Beam Pile Foundation Pier Column Cap Deck Girder Beam Pile Foundation Pier Column Cap Deck Girder Beam Pile Foundation Pier Column Cap Deck Girder Beam Pile Foundation Pier Column Cap Deck Girder Beam Pile
Lake Ray Hubbard Dam Spillway Channel Bridge Abutment Wing Wall Footing Pier Column Cap Deck Girder Beam Pile Foundation Pier Column Cap Deck Girder Beam Pile Foundation Pier Column Cap Deck Girder Beam Pile Foundation Pier Column Cap Deck Girder Beam Pile Foundation Pier Column Cap Deck Girder Beam Pile Foundation
Lake Ray Hubbard Dam Spillway Channel Bridge Abutment Wing Wall Footing Pier Column Cap Deck Girder Beam Pile Foundation Pier Column Cap Deck Girder Beam Pile Foundation Pier Column Cap Deck Girder Beam Pile Foundation Pier Column Cap Deck Girder Beam Pile Foundation Pier Column Cap Deck Girder Beam Pile Foundation Pier
Lake Ray Hubbard Dam Spillway Channel Bridge Abutment Wing Wall Footing Pier Column Cap Deck Girder Beam Pile Foundation Pier Column Cap Deck Girder Beam Pile Foundation Pier Column Cap Deck Girder Beam Pile Foundation Pier Column Cap Deck Girder Beam Pile Foundation Pier Column Cap Deck Girder Beam Pile Foundation Pier Column
Lake Ray Hubbard Dam Spillway Channel Bridge Abutment Wing Wall Footing Pier Column Cap Deck Girder Beam Pile Foundation Pier Column Cap Deck Girder Beam Pile Foundation Pier Column Cap Deck Girder Beam Pile Foundation Pier Column Cap Deck Girder Beam Pile Foundation Pier Column Cap Deck Girder Beam Pile Foundation Pier Column Cap
Lake Ray Hubbard Dam Spillway Channel Bridge Abutment Wing Wall Footing Pier Column Cap Deck Girder Beam Pile Foundation Pier Column Cap Deck Girder Beam Pile Foundation Pier Column Cap Deck Girder Beam Pile Foundation Pier Column Cap Deck Girder Beam Pile Foundation Pier Column Cap Deck Girder Beam Pile Foundation Pier Column Cap Deck
Lake Ray Hubbard Dam Spillway Channel Bridge Abutment Wing Wall Footing Pier Column Cap Deck Girder Beam Pile Foundation Pier Column Cap Deck Girder Beam Pile Foundation Pier Column Cap Deck Girder Beam Pile Foundation Pier Column Cap Deck Girder Beam Pile Foundation Pier Column Cap Deck Girder Beam Pile Foundation Pier Column Cap Deck Girder
Lake Ray Hubbard Dam Spillway Channel Bridge Abutment Wing Wall Footing Pier Column Cap Deck Girder Beam Pile Foundation Pier Column Cap Deck Girder Beam Pile Foundation Pier Column Cap Deck Girder Beam Pile Foundation Pier Column Cap Deck Girder Beam Pile Foundation Pier Column Cap Deck Girder Beam Pile Foundation Pier Column Cap Deck Girder Beam
Lake Ray Hubbard Dam Spillway Channel Bridge Abutment Wing Wall Footing Pier Column Cap Deck Girder Beam Pile Foundation Pier Column Cap Deck Girder Beam Pile Foundation Pier Column Cap Deck Girder Beam Pile Foundation Pier Column Cap Deck Girder Beam Pile Foundation Pier Column Cap Deck Girder Beam Pile Foundation Pier Column Cap Deck Girder Beam Pile
Lake Ray Hubbard Dam Spillway Channel Bridge Abutment Wing Wall Footing Pier Column Cap Deck Girder Beam Pile Foundation Pier Column Cap Deck Girder Beam Pile Foundation Pier Column Cap Deck Girder Beam Pile Foundation Pier Column Cap Deck Girder Beam Pile Foundation Pier Column Cap Deck Girder Beam Pile Foundation Pier Column Cap Deck Girder Beam Pile Foundation
Lake Ray Hubbard Dam Spillway Channel Bridge Abutment Wing Wall Footing Pier Column Cap Deck Girder Beam Pile Foundation Pier Column Cap Deck Girder Beam Pile Foundation Pier Column Cap Deck Girder Beam Pile Foundation Pier Column Cap Deck Girder Beam Pile Foundation Pier Column Cap Deck Girder Beam Pile Foundation Pier Column Cap Deck Girder Beam Pile Foundation Pier
Lake Ray Hubbard Dam Spillway Channel Bridge Abutment Wing Wall Footing Pier Column Cap Deck Girder Beam Pile Foundation Pier Column Cap Deck Girder Beam Pile Foundation Pier Column Cap Deck Girder Beam Pile Foundation Pier Column Cap Deck Girder Beam Pile Foundation Pier Column Cap Deck Girder Beam Pile Foundation Pier Column Cap Deck Girder Beam Pile Foundation Pier Column
Lake Ray Hubbard Dam Spillway Channel Bridge Abutment Wing Wall Footing Pier Column Cap Deck Girder Beam Pile Foundation Pier Column Cap Deck Girder Beam Pile Foundation Pier Column Cap Deck Girder Beam Pile Foundation Pier Column Cap Deck Girder Beam Pile Foundation Pier Column Cap Deck Girder Beam Pile Foundation Pier Column Cap Deck Girder Beam Pile Foundation Pier Column Cap
Lake Ray Hubbard Dam Spillway Channel Bridge Abutment Wing Wall Footing Pier Column Cap Deck Girder Beam Pile Foundation Pier Column Cap Deck Girder Beam Pile Foundation Pier Column Cap Deck Girder Beam Pile Foundation Pier Column Cap Deck Girder Beam Pile Foundation Pier Column Cap Deck Girder Beam Pile Foundation Pier Column Cap Deck Girder Beam Pile Foundation Pier Column Cap Deck
Lake Ray Hubbard Dam Spillway Channel Bridge Abutment Wing Wall Footing Pier Column Cap Deck Girder Beam Pile Foundation Pier Column Cap Deck Girder Beam Pile Foundation Pier Column Cap Deck Girder Beam Pile Foundation Pier Column Cap Deck Girder Beam Pile Foundation Pier Column Cap Deck Girder Beam Pile Foundation Pier Column Cap Deck Girder Beam Pile Foundation Pier Column Cap Deck Girder
Lake Ray Hubbard Dam Spillway Channel Bridge Abutment Wing Wall Footing Pier Column Cap Deck Girder Beam Pile Foundation Pier Column Cap Deck Girder Beam Pile Foundation Pier Column Cap Deck Girder Beam Pile Foundation Pier Column Cap Deck Girder Beam Pile Foundation Pier Column Cap Deck Girder Beam Pile Foundation Pier Column Cap Deck Girder Beam Pile Foundation Pier Column Cap Deck Girder Beam
Lake Ray Hubbard Dam Spillway Channel Bridge Abutment Wing Wall Footing Pier Column Cap Deck Girder Beam Pile Foundation Pier Column Cap Deck Girder Beam Pile Foundation Pier Column Cap Deck Girder Beam Pile Foundation Pier Column Cap Deck Girder Beam Pile Foundation Pier Column Cap Deck Girder Beam Pile Foundation Pier Column Cap Deck Girder Beam Pile Foundation Pier Column Cap Deck Girder Beam Pile Foundation Pier
Lake Ray Hubbard Dam Spillway Channel Bridge Abutment Wing Wall Footing Pier Column Cap Deck Girder Beam Pile Foundation Pier Column Cap Deck Girder Beam Pile Foundation Pier Column Cap Deck Girder Beam Pile Foundation Pier Column Cap Deck Girder Beam Pile Foundation Pier Column Cap Deck Girder Beam Pile Foundation Pier Column Cap Deck Girder Beam Pile Foundation Pier Column Cap Deck Girder Beam Pile Foundation Pier Column Cap
Lake Ray Hubbard Dam Spillway Channel Bridge Abutment Wing Wall Footing Pier Column Cap Deck Girder Beam Pile Foundation Pier Column Cap Deck Girder Beam Pile Foundation Pier Column Cap Deck Girder Beam Pile Foundation Pier Column Cap Deck Girder Beam Pile Foundation Pier Column Cap Deck Girder Beam Pile Foundation Pier Column Cap Deck Girder Beam Pile Foundation Pier Column Cap Deck Girder Beam Pile Foundation Pier Column Cap Deck Girder
Lake Ray Hubbard Dam Spillway Channel Bridge Abutment Wing Wall Footing Pier Column Cap Deck Girder Beam Pile Foundation Pier Column Cap Deck Girder Beam Pile Foundation Pier Column Cap Deck Girder Beam Pile Foundation Pier Column Cap Deck Girder Beam Pile Foundation Pier Column Cap Deck Girder Beam Pile Foundation Pier Column Cap Deck Girder Beam Pile Foundation Pier Column Cap Deck Girder Beam Pile Foundation Pier Column Cap Deck Girder Beam
Lake Ray Hubbard Dam Spillway Channel Bridge Abutment Wing Wall Footing Pier Column Cap Deck Girder Beam Pile Foundation Pier Column Cap Deck Girder Beam Pile Foundation Pier Column Cap Deck Girder Beam Pile Foundation Pier Column Cap Deck Girder Beam Pile Foundation Pier Column Cap Deck Girder Beam Pile Foundation Pier Column Cap Deck Girder Beam Pile Foundation Pier Column Cap Deck Girder Beam Pile Foundation

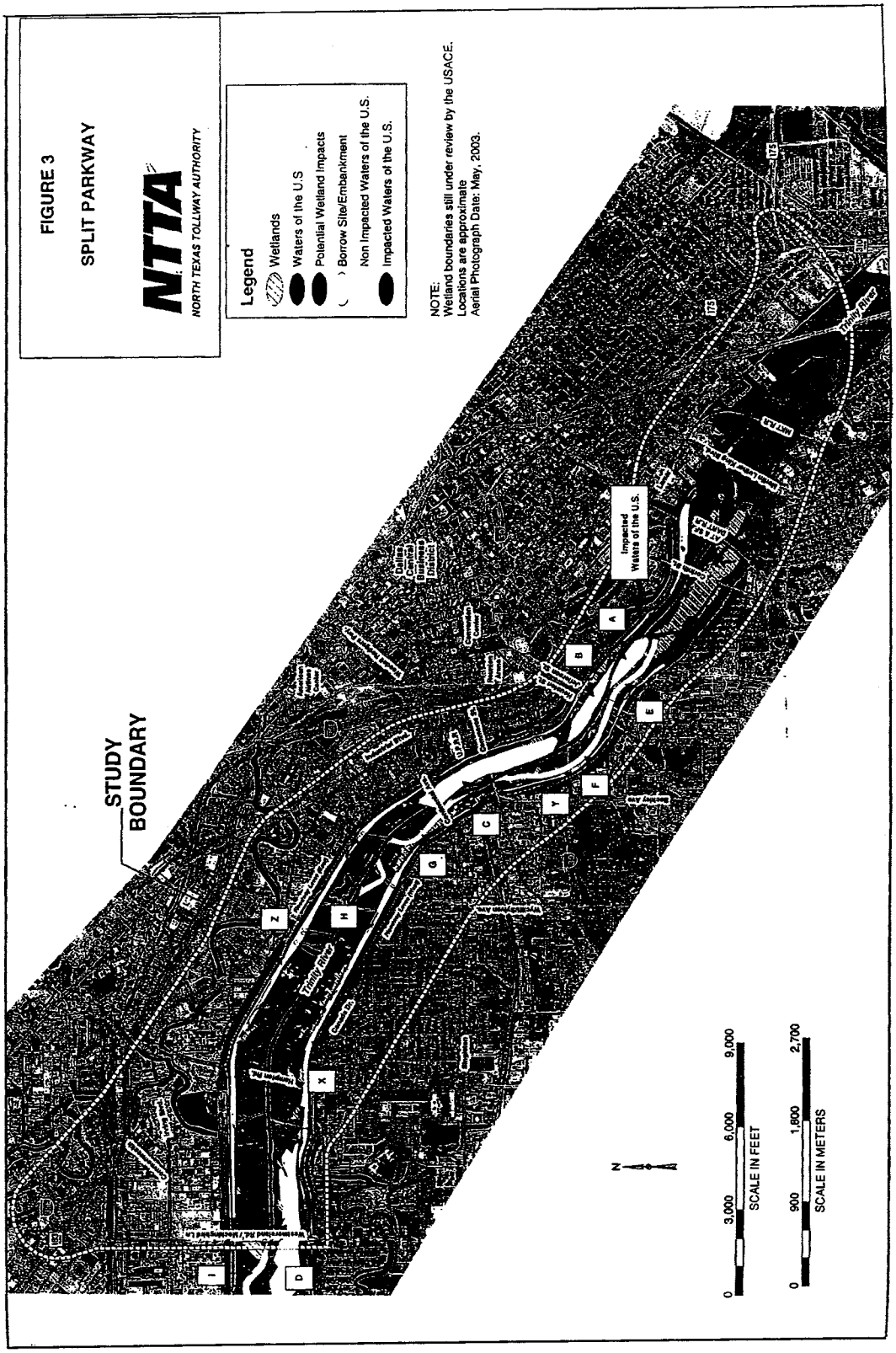
FIGURE 3
SPLIT PARKWAY
NTTA
NORTH TEXAS TOLLWAY AUTHORITY
Legend
Wetlands
Waters of the U.S
Potential Wetland Impacts
Borrow Site/Embankment
Non Impacted Waters of the U.S.
Impacted Waters of the U.S.
NOTE:
Wetland boundaries still under review by the USACE.
Locations are approximate
Aerial Photograph Date: May, 2003.
STUDY BOUNDARY
Impacted Waters of the U.S.
Trinity River
N
0 3,000 6,000 9,000
SCALE IN FEET
0 900 1,800 2,700
SCALE IN METERS

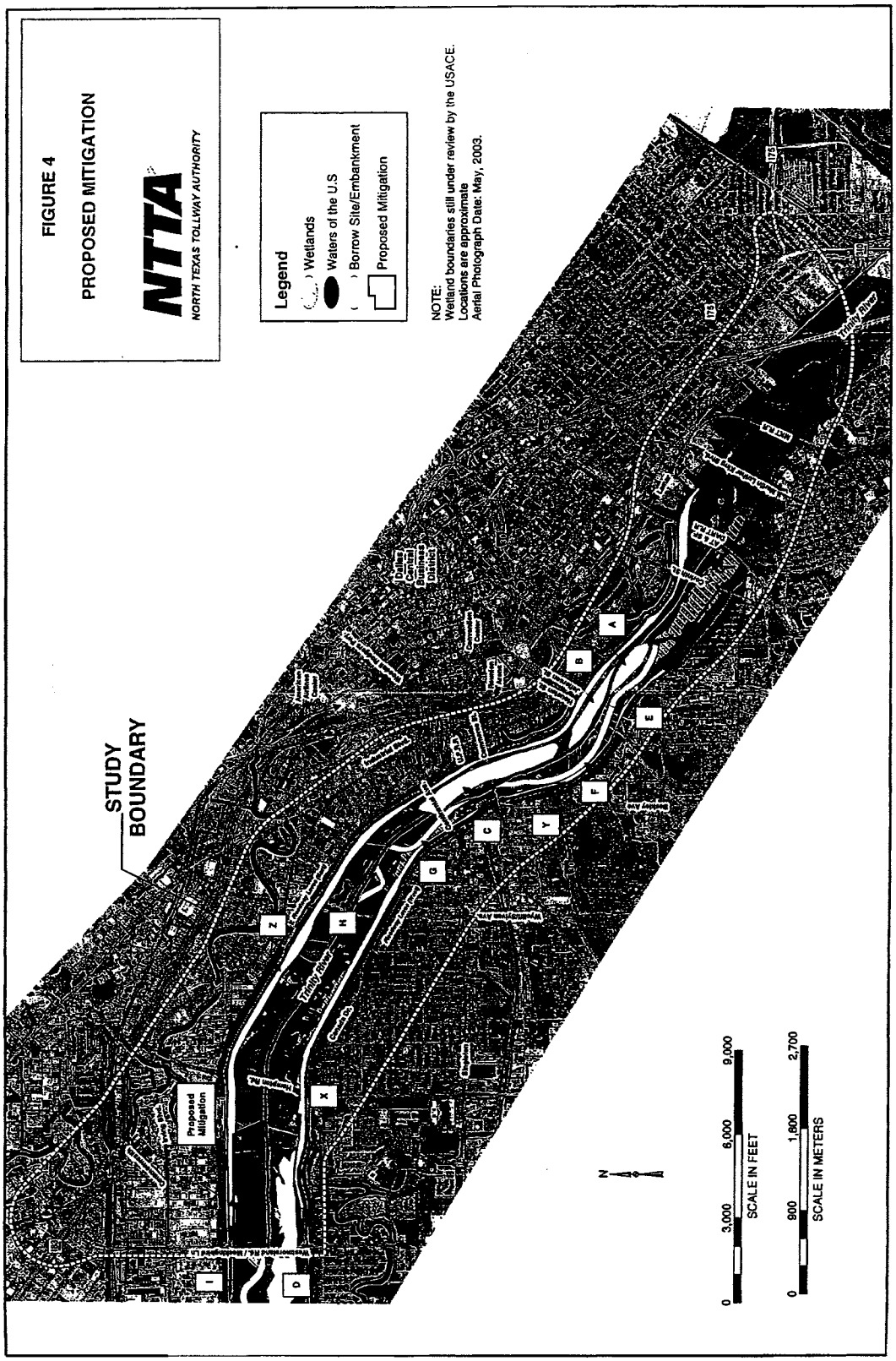
FIGURE 4
PROPOSED MITIGATION
NTTA
NORTH TEXAS TOLLWAY AUTHORITY
Legend
Wetlands
Waters of the U.S
Borrow Site/Embankment
Proposed Mitigation
NOTE:
Wetland boundaries still under review by the USACE.
Locations are approximate
Aerial Photograph Date: May, 2003.
STUDY BOUNDARY
Proposed Mitigation
Trinity River
Cottonwood Creek
Cottonwood Creek
Trinity River
Trinity River
Trinity River

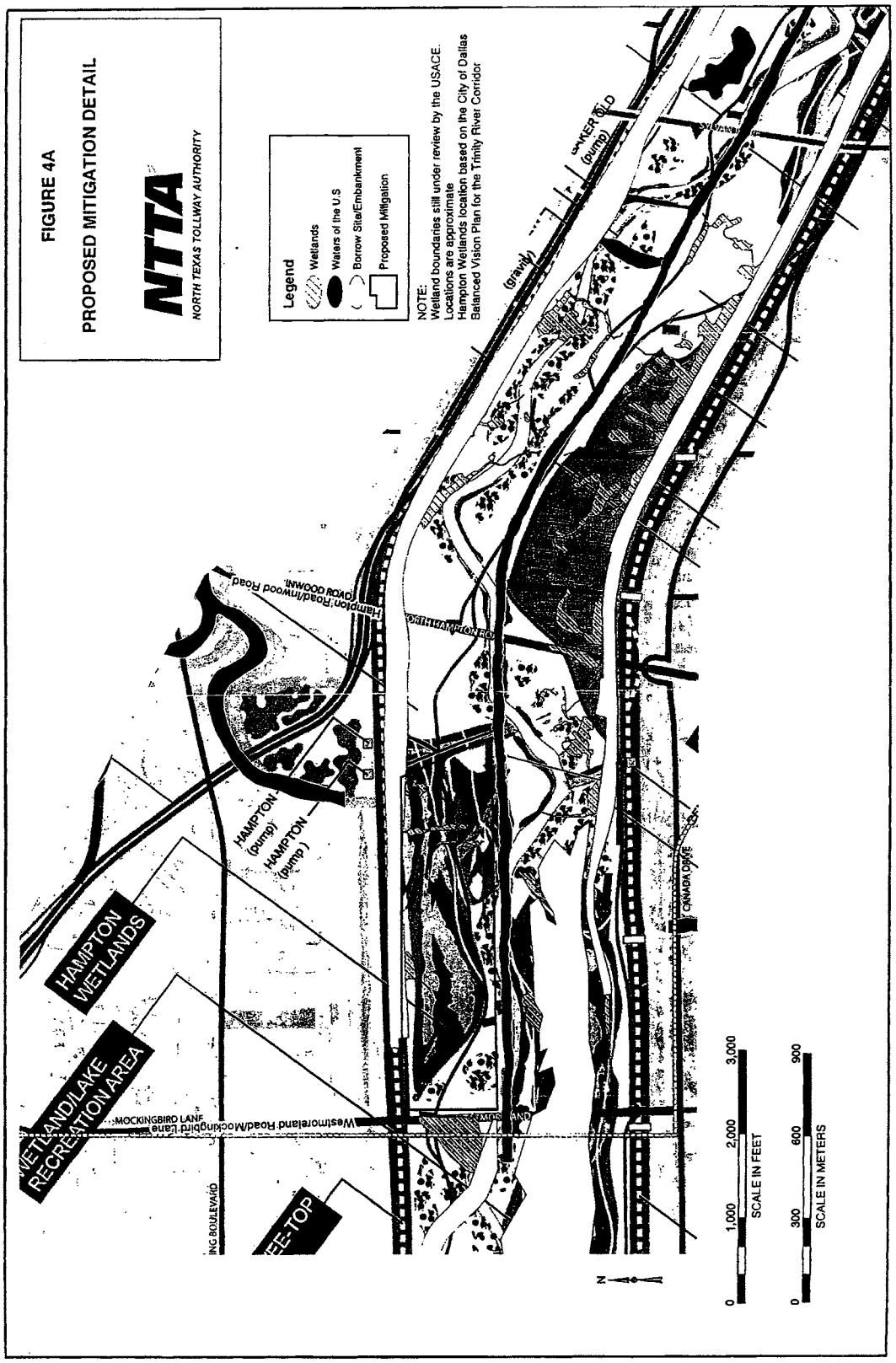
FIGURE 4A
PROPOSED MITIGATION DETAIL
NTTA
NORTH TEXAS TOLLWAY AUTHORITY
Legend
Wetlands
Waters of the U.S
Borrow Site/Embankment
Proposed Mitigation
NOTE:
Wetland boundaries still under review by the USACE.
Locations are approximate
Hampton Wetlands location based on the City of Dallas
Balanced Vision Plan for the Trinity River Corridor
HAMPTON WETLANDS
WETLAND/LAKE RECREATION AREA
HAMPTON (pump)
HAMPTON (pump)
Hampton Road/Inwood Road
INWOOD ROAD
(gravity)
(pump)
MOCKINGBIRD LANE
Westmoreland Road/Mockingbird Lane
ING BOULEVARD
CANADA DRIVE
N
0
1,000
2,000
3,000
SCALE IN FEET
0
300
600
900
SCALE IN METERS

U.S. Department of Transportation
Federal Highway Administration

Texas Division Office
300 E. 8th Street, Room 826
Austin, Texas 78701

July 26, 2005

In Reply Refer To:
HA-TX

Mr. William Fickel, Jr.
Chief, Environmental Division
CESWF-EV
Department of the Army
Fort Worth District Corps of Engineers
P.O. Box 17300
Fort Worth, Texas 76102-0300

Dear Mr. Fickel:

The Federal Highway Administration (FHWA), in cooperation with the Texas Department of Transportation (TxDOT), and North Texas Tollway Authority (NTTA) approved the Trinity Parkway Draft Environmental Impact Statement (DEIS) for circulation on January 28, 2005. The public hearing was conducted on March 29, 2005. At this time North Texas Tollway authority (NTTA) is processing and analyzing public and agency comments.

The proposed project would provide for the construction of a road on a new location along the Trinity River corridor. The approximately 10-mile long project would manage serious congestion near downtown Dallas. Several alternatives were presented in the DEIS and public hearing. Based on the city's and NTTA's recommendations, it is anticipated that the interim recommended Alternative 3B – Combined Parkway will be carried thru into future NEPA documents. The Alternative 3B would be constructed within the floodway.

We also understand that your agency will be preparing a separate DEIS and Plan Formulation document for your proposed actions in the existing Dallas Floodway. It is anticipated that after substantial interagency coordination, FHWA/TxDOT/NTTA will prepare and publish a Supplemental Draft EIS (SDEIS) for the Parkway to incorporate relevant available information from the Floodway DEIS.

Your agency's involvement should entail those areas under its jurisdiction and no direct writing or analysis will be necessary for the document's preparation. The following are activities we will take to maximize interagency cooperation:

- Invite you to technical and policy coordination meetings;
- Actively participate in your public information meetings, as you will likewise participate in ours;

BUCKLE UP AMERICA

- Consult with you on any relevant technical studies that will be required for the project;
- Organize joint field reviews with you;
- Provide you with project information, including study results;
- Encourage your agency to use the above documents to express your views on subjects within your jurisdiction or expertise; and

Include information in the project environmental documents that cooperating agencies need in order to discharge their National Environmental Policy Act (NEPA) responsibilities and any other requirements regarding jurisdictional approvals, permits, licenses, and/or clearances.

You have the right to expect that the subsequent NEPA documents will enable you to discharge your jurisdictional responsibilities. Likewise, you have the obligation to tell us if, at any point in the process and in a timely manner, your needs are not being met. We expect that at the end of the process the subsequent NEPA documents will satisfy your NEPA requirements including those related to project alternatives, environmental consequences, and mitigation. Further, we intend to utilize the subsequent NEPA documents as our decision making document and as the basis for the permit application to proceed before the project is constructed.

We look forward to your response to this request and your role as a cooperating agency on this project. If you have any questions or would like to discuss in more detail the project or our agencies' respective roles and responsibilities during the preparation of these subsequent NEPA documents, please contact Ms. Anita Wilson at (512) 536-5951 or Mr. Tom Bruechert (512) 536-5948.

Sincerely,

Salvador Deocampo
District Engineer

cc:
Mr. Tom Bruechert, FHWA Texas Division Office
Ms. Dianna Noble, P.E., TxDOT-ENV
Mr. William L. Hale, P.E.,
Mr. Allan Rutter, NTTA

W:\FINAL\District.A\Dallas\Dallas\TrinityAgencyCoopLetter to CofE_07262005.doc

File Copy

COPY MAILED
WASH. _____
REGION _____
STATE 7-26-05
CW

OCT-06-2005 03:00PM FAX:5125365990 ID:TOLLWAY AUTHORITY PAGE:018 R=95%

FILE: TRINITY PKWY DALLAS County

DEPARTMENT OF THE ARMY
FORT WORTH DISTRICT, CORPS OF ENGINEERS
P.O. BOX 17300
FORT WORTH, TEXAS 76102-0300

REPLY TO
ATTENTION OF:

Planning, Environmental, and Regulatory Division

Mr. Salvador Deocampo
U.S. Department of Transportation
Federal Highway Administration
Texas Division Office
300 E. 8th Street, Room 826
Austin, Texas 78701

Dear Mr. Deocampo:

I am responding to your request of July 26, 2005 for the U.S. Army Corps of Engineers, Fort Worth District (Corps) to become a cooperating agency in the preparation of the Trinity Parkway Environmental Impact Statement (EIS) in accordance with Part 1501.6 of CEQ's NEPA Implementation Regulations. We would be most pleased to do so. Our jurisdiction and involvement as a cooperating agency will focus on the following: the Section 404 and Section 10 permit approval process; consideration of approval of all construction activities within the limits of the existing Federal Dallas Floodway project; and the potential effects the roadway alternatives would have on plan formulation of the Corps Dallas Floodway study. Our April 13, 2005 letter on the Trinity Parkway draft EIS contained detailed comments regarding each of the above items.

As previously indicated in our April 13 letter, a Department of the Army Standard Individual Permit likely will be required under Section 404 of the Clean Water Act and Section 10 of the Rivers and Harbors Act of 1899 to authorize five of the six roadway alternatives being considered. Under Section 404, a permit is required for any discharge of dredged or fill material into waters of the United States. Under Section 10, a permit is required for any work, or activity, in, or affecting, navigable waters of the United States.

Members of my Regulatory Branch have been working closely with your staff to delineate the waters of the United States and on pre-application coordination on the permit approval requirements to help identify ways to avoid and minimize adverse impacts to the aquatic environment to the maximum extent practicable. In this regard, I encourage you to provide as much substantive information as practical on the quality and quantity of aquatic resources that will be affected by the alternatives being considered. Such information will materially aid the Corps in judging which alternative would cause the least adverse overall effect on the aquatic environment. Our April 13, 2005 letter contained guidance on the preparation of the draft EIS relative to our responsibility under Section 404 and Section 10.

OCT-06-2005 02:56PM FAX:5125365990 ID:TOLLWAY AUTHORITY PAGE:002 R=95%

Integral to our Section 404 permit review process is the requirement to insure compliance with the hydraulic criteria contained in the Trinity River and Tributaries Regional Environmental Impact Statement Record of Decision (ROD), dated April 29, 1988. Based on our review of the hydraulic model for Alternative 3B, we don't believe it is compliant with the aforementioned criteria. Enclosure 1 describes our review of the model and additional hydraulic mitigation features that we recommend you incorporate into the project to reduce the adverse hydraulic effects. We ask also that you provide the hydraulic models for the other alternatives (3A and 4) that affect the floodway so we can compare hydraulic effects among the alternatives.

All construction within the limits of the Federal Dallas Floodway project will require approval by the Fort Worth District Engineer. This includes, but is not limited to, excavation, construction affecting the levee, modifications to the sumps, river crossings, and tree planting. Please refer to the enclosed Fort Worth District Pamphlet No. 1150-2-1 (Enclosure 2) for guidance and criteria for these activities. We recommend that this criterion be incorporated into your ongoing planning and described in the EIS to facilitate and insure these considerations are factored into the final project design. Final construction plans and specifications will also need to be submitted to the Corps for final approval of all construction in the floodway.

We also recommend that a plan be developed and included in the EIS that describes the actions that should be taken immediately prior to, during, and after a major flood event. Such actions might entail consideration of closing the road as water elevations approach the 100-year elevation, activating a team to monitor the event, and implementing emergency actions if damage occurs to the road, the floodwalls, or the levee. It is also important that the plan address cleanup procedures that would be taken following flood events or accidents that might release oils, grease, toxic or other hazardous substances.

We are committed to continue to work closely with your agency, the North Texas Tollway Authority, and the Texas Department of Transportation so that the Trinity Parkway project is well coordinated with our Dallas Floodway project. We also look forward to our role as a cooperating agency to insure that your NEPA process will satisfy our NEPA requirements for Section 404 and Section 10 permitting and floodway construction approval. Please contact Mr. Gene T. Rice, Jr. at (817) 886-1374 or Mr. Mark Harberg at (817) 886-1687, if you have any questions regarding our recommendations outlined above.

Sincerely,

William Fickel, Jr.
Chief, Planning, Environmental
and Regulator Division

Enclosures

September 16, 2005

Development of the Proposed Trinity Parkway Hydraulic Analysis

1. An updated hydraulic model for existing conditions on the Trinity River and the Dallas Floodway was completed and is referred to as the Revised Existing model. This model revision was limited to the reach of the Trinity River between the Martin Luther King Blvd bridge and the confluence of the Elm Fork and the West Fork Trinity River and was a revision to the previously developed Corridor Development Certificate (CDC) model. The Revised Existing model was mostly developed by A-E using recent survey data, additional cross section locations and updated bridge model input. The updated bridge model input was provided by the Corps along with periodic reviews to ensure consistency with the proposed Trinity Parkway model. The Revised Existing model update includes the following data:

    a. New 1-foot contour survey for both the East and West Levees extending from the DART bridge to the Union Pacific Railroad bridge.

    b. New 1-foot contour survey for the existing channel with bathymetry extending from the DART bridge to the confluence of the Elm Fork and the West Fork.

    c. Includes the 1991 2-foot contour survey of the floodplain between the channel banks and levee toe.

    d. Includes updated bridge model input for all bridges in the floodway on the main stem Trinity River.

    e. Includes adding approximately 200 % more cross section locations than the CDC model within the floodway on the main stem Trinity River.

2. The initial preferred Trinity Parkway Plan (Alternative 3b) was developed along with a Trinity Parkway Plan hydraulic model. The model is based on the updated Revised Existing hydraulic model for the Dallas Floodway. The model was also developed by A-E with review by the Corps to ensure consistency between the two models. The basic features of the Trinity Parkway model are as follows:

    a. Includes parkway embankment for 6 lanes (3 northbound and 3 southbound) on the East Levee.

    b. Includes excavation needed for the parkway embankment and is located consistent with plans for future lakes.

Encl. 1

c. Includes excavation for a relocated river channel and is located consistent with plans for future lakes. The existing river channel is not filled.

d. Includes model input for the proposed Woodall Rodgers Bridge.

3. Upon completion of the basic development of the Parkway Plan and the hydraulic model, the A-E submitted the model to the Corps for review. The review was comprised of a number of checks to ensure that the appropriate data was used in the model such that an accurate comparison could be made between the proposed Trinity Parkway model and the Revised Existing model. The previous (1991) survey data and the new survey data was checked and found to have been properly integrated. The model cross sections were checked and found to consistently match the survey data. The number and locations of cross sections was checked and found to be consistent with the Revised Existing model. The bridge model input provided by the Corps was checked and found to be correctly integrated into the model. The cross sectional representation of the parkway embankment and excavation was checked and found to be adequately modeled.

4. Upon completion of the Trinity Parkway model review and running the models for computational stability checks, the comparison of the Trinity Parkway model and the Revised Existing model was required to determine if the Trinity Parkway Plan meets the requirements of the 1988 Record of Decision hydraulic criteria. The Record of Decision hydraulic criteria states; (A) No rise in the 100-year or SPF water surface elevation for the proposed condition will be allowed, (B) The maximum allowable loss in the valley storage capacity is 0 % for the 100-year and 5 % for the SPF, and (C) Alteration of the floodplain may not create or increase an erosive water velocity on or off site. The 1988 ROD does not provide a detailed description of how the percent loss of valley storage is to be computed. However, since the ROD criteria is essentially the same as the hydraulic criteria for evaluation of a project subject to the Corridor Development Certificate process, the method of computing the allowable valley storage losses stated in the Corridor Development Certificate Manual – 3rd Edition is used. The manual states that any decrease in valley storage is computed with respect to the amount of valley storage originally available in the proposed project tract. For the purposes of computing the percentage of valley storage loss for the Trinity Parkway project, the "proposed project tract" is assumed to be the entire floodway width from the downstream limits of the Trinity Parkway project near the Martin Luther King Blvd bridge to the confluence of the East Fork and the West Fork. This assumption is considered valid because the project could potentially alter any of the land area between the levees within this river reach.

5. The initial plan for the Trinity Parkway completed by the A-E and the hydraulic model of the plan was submitted to the Corps for review. The model was used by the Corps to compare the hydraulic performance of the plan with the Revised Existing model. The results of the comparison indicated that the ROD criteria for the water surface elevations and flow velocities were met but the valley storage

criteria was not met for either the 100-year or SPF flood events. The valley storage loss resulting from the lower water surface profile for the 100-year was computed as 1,736 acre-feet or 4.9 % of the without-project valley storage within the project reach as described above. The valley storage loss for the SPF was computed as 3,433 acre-feet or 5.8 % of the without-project valley storage. These values are actually underestimated since this valley storage computation only considered the reach from the downstream limit of the project upstream to the confluence of the Elm Fork and the West Fork. The water surface profile upstream of the confluence on the Elm Fork and the West Fork was actually slightly lower for both flood events compared to the existing condition and would be considered additional valley storage loss but was not included in this computation.

6. Following this analysis the Corps performed further hydraulic analysis in an attempt to reduce or eliminate the hydraulic adverse impacts resulting from the Trinity Parkway project as initially proposed. The result of this analysis indicates that the adverse hydraulic and hydrologic impacts can be reasonably minimized with some modifications to the initial plan and are described below. These modifications result in the reduction of the valley storage loss for the 100-year to 145 acre-feet or 0.4 % of the without-project valley storage and reduction of the valley storage loss for the SPF to 531 acre-feet or 0.9 %. There is no change to the water surface profile upstream of the confluence for either the 100 –year or the SPF flood events, therefore, there is no additional valley storage loss upstream of the confluence resulting from the project. There is no rise in the SPF water surface profile and no rise in the 100-year water surface profile upstream of the confluence of the East Fork and the West Fork resulting from the project. However, there is a rise in the 100-year water surface profile within the project reach in the Dallas Floodway ranging up to a maximum of 0.30 feet.

In conclusion, the modifications to the initial plan have reduced significantly the overall impacts of the project both upstream and downstream of the project. However, the criteria set forth in the ROD, has not been fully met by these modifications. Specifically, the limit of no rise in the 100-year water surface profile has been exceeded by a maximum of 0.30 feet and the limit of 0 % valley storage loss has not been met having been computed as 145 acre-feet or 0.4 %. The impacts of the rise in the 100-year water surface profile is limited to the reach within the Dallas Floodway levees on the main stem Trinity River and would not be expected to cause an increased risk of flood damages because of the existing levees having a protection level much higher than the 100-year level. The impacts of the valley storage loss for the 100-year will be primarily downstream of the project by increasing slightly the peak discharge for this flood event and potentially increasing flood levels downstream. There is also a valley storage loss remaining for the SPF event with the modifications to the initial plan but the ROD criteria has been met because the SPF valley loss of 531 acre-feet or 0.9 % is within the allowable 5 % of the without-project valley storage of the "proposed project tract".

A further analysis was completed to determine the impacts of the valley storage losses remaining with the project modifications. The results of the analysis was that the peak discharges for the 100-year and the SPF events were raised slightly downstream of the project but the corresponding increase in the water surface profile downstream for either event was no greater than 0.01 feet at any location.

The proposed modifications to the initial Trinity Parkway project that have been identified in this analysis are summarized with both excavation changes and vegetation changes:

Excavation Changes

a. Excavation to widen the existing channel from River station 1096+70 to 1100+09 is eliminated from the initial plan.

b. Widening of the lake excavation is added down to elevation 390.0 on the west side from River Station 1122+63 to 1138+90.

c. Excavation for proposed future wetlands on the left overbank is added down to elevation 404.0 from River Station 1367+21 to 1402+72.

d. Excavation for proposed future wetlands on the right overbank is added down to elevation 404.0 from River Station 1373+74 to 1420+04.

Vegetation Changes

a. Dense vegetation is added with a design Manning's roughness coefficient of 0.150 on the left and right overbanks from River Station 1157+64 to1244+34.

b. Vegetation is added with a design roughness coefficient of 0.085 on the right and left overbanks from River Station 1244+34 to 1247+30.

c. Vegetation is added with a design roughness coefficient of 0.065 on the right overbank only from River Station 1247+30 to 1253+80.

d. Vegetation is added with a design roughness coefficient of 0.085 added on the right overbank only from River Station 1254+87 to 1264+29.

DEPARTMENT OF THE ARMY **SWFP 1150-2-1**
U.S Army Corps of Engineers, Fort Worth District
P.O. Box 17300
Fort Worth, Texas 76102-0300

Pamphlet
No. 1150-2-1 31 October 2003

Local Cooperation
CRITERIA FOR CONSTRUCTION WITHIN THE LIMITS
OF EXISTING FEDERAL FLOOD PROTECTION PROJECTS

1. Pamphlet Purpose. This pamphlet provides guidance to individuals, developers, architect-engineering firms, local project sponsors, and local governmental agencies for the construction of new facilities or the modification of existing facilities within the limits of an existing Federal flood protection project constructed by the U.S. Army Corps of Engineers, Fort Worth District (CESWF) and for which local project sponsors and/or local governmental agencies have the responsibilities for operation and maintenance. The CESWF, in accordance with Title 33 CFR, Section 208.10, retains the right of review and approval on all proposed improvements and/or modifications that are passed over, under, or through the walls, levees, improved channels, or floodways of such projects. The guidance contained in this pamphlet applies to the activities described herein in most cases; however CESWF reserves the right to reconsider this guidance at any time due to unknown or unforeseen circumstances, technological advances, additional information, etc.

2. Applicability. This pamphlet applies to all Federal flood protection projects constructed by CESWF, and for which a letter of assurance agreeing to the operation and maintenance of the flood protection project has been furnished CESWF by the project's local sponsor.

3. Project Purpose. A Federal flood control project is designed to safely carry floodwater within the project and through a developed area. As such, any proposed developments within the project must keep the safe passage of floodwater as the first priority. The roles of the CESWF and the project local sponsor are to maintain the integrity of the project while preventing negative impacts to the passage of the project design flood. The CESWF will not allow the safety of the project to be compromised or the required design carrying capacity of the project reduced.

4. General Criteria for Construction Within a Floodway.

a. As early as possible during the planning process, discuss preliminary proposals with the CESWF and the local sponsor to avoid major revisions or project delay. The local sponsor may make any requirements of this Pamphlet more stringent than those contained herein. Concept proposals may be submitted for review. Submit the proposed construction starting date and the detailed project construction schedule, including sequence of construction prior to initiation of work.

b. Construction may not start until final written contract drawings and plans have been reviewed and approved in writing by both the CESWF and the local sponsor.

c. Furnish five (5) sets of plans and specifications for the proposed work to the CESWF, Operations Division, ATTN: CESWF-OD-M, via the local sponsor sufficiently in advance of proposed construction to allow adequate time for review and approval. A vicinity map shall be included in the plans showing the right-of-way boundaries of the flood protection project with specific levee toe and channel slope limits in the portion of the project being crossed, if applicable.

This pamphlet supersedes SWFP 1150-2-1 dated 15 October 1985.

ENCL 2

OCT-06-2005 02:57PM FAX:5125365990 ID:TOLLWAY AUTHORITY PAGE:008 R=95%

d. If boring, jacking, or tunneling operations are planned; detailed designs, calculations, and construction procedures must be provided for review. See subsequent paragraphs for additional details and required procedures.

e. Practice approved construction methods and best management practices to minimize erosion at the construction site. All work shall be performed in such a manner as to be as environmentally friendly as possible. This includes making every effort to reduce the turbidity of the water at the site, such as by limiting the amount of time construction equipment is in the water. A storm water pollution prevention plan (SWPPP) must be included in the final project submittal.

f. When construction work is in progress in a project located downstream of a Federal dam, a request from the contractor for changes in regulated releases will be considered on individual cases only. Normally, regulated releases from upstream lakes for evacuation of floodwaters, water supply, recreation, or other purposes considered to be in the best interest of the public will have first consideration. A flood event could occur at any time during construction activities and could affect these activities.

g. Construction equipment, spoil material, supplies, forms, buildings for inspectors, labs, or equipment and supply storage buildings, etc., shall not be placed or stored in the floodway during construction activities. Any item that may be transported by flood flows shall not be stored within the project. Locations of construction trailers and stockpile areas shall be included on project plans and approved by the CESWF and the local sponsor.

h. In addition to other requirements set forth in this Pamphlet, permits may be required under Section 10 and Section 404 for the desired work. These permits require a minimum of 90 days to process. It is recommended that contact with the CESWF Regulatory Branch be initiated in the early planning stages to prevent delays.

i. Repair or replace any maintenance and operation roads disturbed during construction to a condition equal to or better than their condition before construction. All roads must be inspected by the local sponsor prior to completion of the project.

j. Compact all fill and backfill in 6-inch lifts as specified in job specifications approved by the CESWF. Compaction shall be to at least 95 percent of modified density as specified in ASTM D-1557. All backfill shall consist of impervious materials. Reestablish vegetation to its original condition or better. Remove all excess material from the limits of the floodway.

k. Provide scour protection consisting of articulating revetment system protection capable of being re-vegetated at the outfall of stilling basins designed according to the issuing jet velocity. If approved by the local sponsor, riprap, gabions, or concrete paving may be substituted for the revetments.

l. The crown or crest of the levee referred to in this pamphlet is the original or design levee crest elevation. This may or may not be the same as the current levee crest elevation. All modifications shall be based on the higher of the two elevations.

m. Upon request, the CESWF Hydrology and Hydraulics Section may provide applicable hydraulic models to be used for design.

n. Any permanent disturbance of existing recreation facilities must be mitigated.

o. Sump areas adjacent to federal projects are considered an integral part of the federal project and any modifications to them will be reviewed and approved in accordance with this Pamphlet.

OCT-06-2005 02:58PM FAX:5125365990 ID:TOLLWAY AUTHORITY PAGE:009 R=95%

5. Crossing Over Existing Levees At Grade.

a. The local sponsor may decide to not allow any proposed crossing over existing levees at grade.

b. No excavation or notching will be performed into or on the levee, or within the levee template.

c. Strip topsoil from the levee and place the line up and over the levee template slopes at grade. This will require rather abrupt line grade changes at the levee crest. Cover the new line by placing new fill uniformly on the slopes and top of the levee to slope away from the line and parallel to the longitudinal axis of the levee. Provide a minimum of 2 feet of cover over the new line. The slope of the fill shall be 1 vertical on 20 horizontal or flatter. Replace the topsoil, reestablish grass on all disturbed areas, and restore any roadways.

d. All valves located within 15 feet of either side of the projected toe of the levee shall be provided in a concrete box enclosure with a manhole type cover. Valve boxes located within the floodway shall be underground and flush with the surface. If the valve box is placed in the levee crest, the bottom of the excavation shall be not lower than one foot above the design water surface elevation. Fill shall be uniformly placed to slope away from the top of the valve box. If possible all valves shall be placed on the landside of levees a minimum of 15 feet from the projected levee toe.

e. Provide water-tight sealed manhole covers for all manholes within the floodway having tops below design water surface elevation. Fasten manhole covers to the manhole structures.

6. Crossing Under Levees with Open Excavation.

a. Provide a temporary ring levee (cofferdam) on the riverside of the existing levee at the location of the subject crossing to the same top elevation as the existing levee. This ring levee shall have a minimum crest width of 10 feet and sides slopes of 1 vertical on 3 horizontal or flatter. Construct the levee of impervious materials according to the provisions specified in Paragraph 4j.

b. When the temporary ring levee is complete, excavate through the existing levee using one vertical on three horizontal cut slopes. The toe of the levee and ring levee shall be a minimum of 20 feet (measured horizontally) from the top edge of the excavation.

c. Generally, sources for borrow materials shall not be located within the limits of the floodway right-of-ways. In addition, depending on the type of soil and whether or not pervious materials or unstable materials exist in the foundation of the existing levee, it may be desirable to limit the depth of excavation or specify a minimum distance from the land-side toe of the levee. All excavated slopes shall be properly designed and the drawings sealed by a registered professional engineer.

d. After the line has been placed, the open excavation will be compacted in accordance with Paragraph 4j. When backfill operations are completed, the entire foundation area to be occupied by the replaced levee fill shall be scarified, plowed, and/or harrowed to a depth of 6 inches, and then compacted by at least 16 complete passes of the tamping roller or 95 percent modified density, whichever is more rigorous.

e. Accomplish levee replacement by placing fill in 6-inch lifts and compacting by not less than eight complete passes of a tamping roller or at least 95 percent modified density. After compaction, the moisture content shall be within the limits of 3 percentage points above optimum to 2 percentage points below optimum moisture content.

OCT-06-2005 02:58PM FAX:5125365990 ID:TOLLWAY AUTHORITY PAGE:010 R=95%

f. Determine the in-place moisture content and density of the levee fill on a frequency of about one sample for each 2500 cubic yards of backfill placed in the levee.

g. When the breached levee has been reconstructed to its original grade, remove the temporary ring levee and dress and turf the surface areas of the plugged section.

h. Provide water-tight sealed manhole covers for all manholes within the flood protection project having tops below design water surface elevation. Fasten manhole covers to the manhole structures.

i. For pipelines, install a positive cut-off structure to prevent water from the riverside flowing through the pipeline to the landside. If located on the riverside of a levee, extend the cut-off structure to the levee crown elevation by bridge. This structure must be accessible no matter what flood condition may exist. The closure device must be operational by manpower, if necessary.

j. Provide gravity storm drains discharging into the floodway with automatic flap gate(s) at the discharge end of the line and energy dissipaters, as required. The owner or local sponsor, as per written agreement, shall be responsible for inspection and maintenance to ensure proper operation of the flap gates.

k. Use monolithic conduits or conduits with water-tight joints under the levee and levee template.

7. **Crossing Under Levees with Boring or Jacking of Sleeves.** The sequence of work shall be as follows:

a. Excavate the boring and jacking pit (must be on the land side outside the projected toe of the levee template slope).

b. Bore and jack the sleeve to a point beyond the projected riverside toe of the levee template slope.

c. If the difference in the diameters of the bore and sleeve exceeds 3 inches, the annular space shall be pressure grouted with bentonite slurry.

d. Place the product line in the sleeve.

e. Pressure grout the product line in sleeve with bentonite slurry.

f. Excavate the pit on the riverside and construct a manhole with gate valve placed on inside face of manhole away from channel. Tie line from sleeve under levee into manhole with gate valve.

g. Tie line from sleeve under levee into a manhole on landside.

h. During work on items a through h, a plug will be required to be placed and braced at the open end of the sleeve and pipe located in the jacking pit at the close of work each day. This plug must remain in place until the gate valve is installed and connections made to ensure protection from flooding from the river.

8. **Horizontal Directional Drilling Under Levees and Channels.**

a. Detailed contractual drawings, plans, procedures, and engineering calculations shall be provided to CESWF for review. These must include all the requirements of Paragraph 4 above and the following additional items:

(1) Inside diameter of the final bore hole and outside diameter of the product casing.

OCT-06-2005 02:58PM FAX:5125365990 ID:TOLLWAY AUTHORITY PAGE:011 R=95%

(2) Detailed description of construction and horizontal boring methods to be utilized.

(3) If the difference in the diameters of the final bore and product casing exceeds 3 inches, provide the method of pressure grouting the annular space between the outside of the product casing and the inside of the bore to prevent seepage under the levee template during maximum river stages.

(4) A profile of the proposed line showing alignment (including location of the river and levees).

(5) Location of entry and exit points, location, elevations and proposed clearances for all utility crossings and structures

(6) Right-of-way lines, property, and other utility right-of-way or easement lines

(7) Depth under the base of the levee, depth of the line under the river channel, and location of both ends of the string. If the proposed depth of the string directly below the base of the levee is less than 30 feet, then detailed engineering calculations sealed by a registered professional engineer shall be provided for review. These calculations must show a minimum 1.5 factor of safety against hydro-fracturing to be acceptable.

b. Develop and provide a quality control plan for the project that includes the maximum allowable drilling pressure, gage calibration method, and responsibility for assuring that the pressure is not exceeded.

c. The minimum clearance distance from the top of the pipe encasement to the original design river bottom elevation shall be 7 feet. Should the existing channel bottom elevation be lower than original design grade, the new line shall be the discussed depth below the existing bottom elevation.

d. Develop and provide a quality control plan for the project that includes the maximum allowable drilling pressure, gage calibration method, and specific responsibility for assuring that the pressure is not exceeded. During the drilling process, the pressure in the borehole must be monitored to ensure that the operational drilling pressures remain within the safe limits to prevent soil fracturing. The name of the party responsible for monitoring the work must be specified.

9. Bridges Crossing Levees.

a. The bottom of low steel of the bridge shall be above the design crest elevation of the levee. No notching into the levee will be allowed.

b. All bents should be located to minimize the number of bents located within the template of the levee. Driving of piles within the template of the levee will not be allowed. Bents at these locations should only be designed as drilled piers.

c. Bridges will not be located where their construction will block maintenance access roads presently located within the floodway.

d. All storm water runoff from bridge decks must be piped to grade to prevent erosion within the floodway.

e. Re-vegetated mat type slope protection must be provided from the top of the levee to the floodway bottom under the shadowline of the bridge.

OCT-06-2005 02:59PM FAX:5125365990 ID:TOLLWAY AUTHORITY PAGE:012 R=95%

f. The bridge must be designed to minimize the number of pier bents. If the new bridge is within 500 feet of an existing bridge the new pier bents must be in alignment with the adjacent bridge.

10. Buried Lines Parallel to Levees and Channels.

a. Buried lines parallel with a levee (either on the river side or land side) will not be allowed where the buried lines final location will be within the extended template of the levee. For example, a line buried 5 feet deep must be at least 15 feet away from the toe of a levee with a 1 vertical on 3 horizontal slope.

b. Sumps, ditches, swales, or other project features crossed by the buried line shall be restored to their pre construction condition.

c. Buried lines parallel with the channel bank must be at least 25 feet from the projected river channel slope template.

d. When a buried line crosses a discharge channel, place the line on piers with the piers aligned so as to provide minimal obstruction to flow in the discharge channel and designed so as to catch minimal debris. The preferred alternative would be to place the line under the discharge channel and encase it with concrete. Extend the encasement a minimum of 5 feet beyond the top of the channel side slopes.

11. River and Channel Crossing Criteria.

a. Crossings Under Rivers and Channels by Open Excavation:

(1) Bury the line a minimum of 7 feet below the original design river bottom elevation. Should the existing channel bottom elevation be lower than original design grade, the new line shall be the discussed depth below the existing bottom elevation.

(2) Sufficiently anchor or encase the line to prevent floatation.

(3) Backfill the excavation with material similar to that excavated. If soil is excavated, backfill with compacted impervious fill material and if rock is excavated, backfill with concrete.

(4) No cofferdam fill type crossings shall be allowed in water greater than six (6) feet in depth, and will then only be allowed if geotechnical and structural designs prove that sheet piling would not be a viable method.

b. Crossings Over Rivers and Channels.

(1) Provide a minimum freeboard between the low point of the crossing and the design water surface elevation of three feet or to the top of any levee, whichever is higher.

(2) The obstruction caused by the supporting bridge and its piers shall not significantly reduce the carrying capacity of the floodway. No longitudinal cross bracing will be used.

(3) Submit final plans and hydraulic computations to indicate that the proposed project would not reduce the floodway capacity.

(4) Projects crossing navigable waterways (Trinity River downstream from Riverside Drive in Fort Worth, Texas) shall require a United States Coast Guard permit. Clearances and requirements shall be as directed by the Coast Guard.

OCT-06-2005 02:59PM FAX:5125365990 ID:TOLLWAY AUTHORITY PAGE:013 R=95%

12. Roadway or Railroad Crossings.

a. The low steel of a bridge shall have an elevation not lower than the crown of the levee or top of bank or 3 feet above the design water surface, whichever is higher. Contact CESWF for the current design water surface at the location of the proposed roadway crossing. Additional clearances shall be required for fixed spans over navigable waterways.

b. Submit final plans and hydraulic computations to indicate the proposed roadway or bridge would not reduce flows or project capacity. Projects will not be approved that reduce the carrying capacity of the project.

c. Any roadway over a navigable waterway will require a permit from the United States Coast Guard.

d. See Paragraph 9 for special requirements for crossing levees.

e. Hold temporary roadway fill to a minimum to prevent increasing the water surface elevation should a flood occur during the construction period. Construct all temporary ramps from levees going in a downstream direction. This will prevent flows from being directed into the face of the levees.

13. Headwall, Chutes, Gate Valves, Flap (Automatic) Gates, etc.

a. Install headwall, gate valve structures, flap (automatic) gates, and other types of outfall structures in such a manner to prevent obstruction of flow or creation of scouring conditions within the project. All headwalls must transition with the slope and flow discharge points must be at an elevation equal to the bottom of the slope or at the normal water surface. Chutes will not be allowed unless they are the only viable alternative.

b. All structures shall be installed in such a manner so as to not create maintenance problems.

14. Pump Discharge Pipelines Over Levees.

a. The invert of the discharge shall be at the toe of the protective works (levee) and shall be free-vented at the highest point. For very large lines deviation from this criteria may be considered, but under no condition shall excavation be permitted into the levee. See Paragraph 5 for requirements for crossing over a levee on grade.

b. Flap (automatic) gates are not required at the outfall of the discharge lines.

15. Electrical and Telephone Criteria for Overhead Wire Crossings.

a. The local sponsor may require directional boring under the levee as opposed to an overhead crossing.

b. No structure (poles or otherwise) shall be located closer than 15 feet from the toe of any levee.

c. No structure (poles or otherwise) shall be located closer than 15 feet from the top of any channel slope.

d. Provide a minimum vertical clearance of 28 feet between the crown of the levee and the low wire at the low point of the wire at the levee crossing computed under the most adverse conditions (temperature, wind, load, etc.).

OCT-06-2005 02:59PM FAX:5125365990 ID:TOLLWAY AUTHORITY PAGE:014 R=95%

e. Provide a minimum vertical clearance of 28 feet between the natural ground and the low wire at the low point of the sag in the area of the project channel, or three feet above the project design water surface level, whichever is higher. (Check Electrical Code for minimum clearance of high voltage lines.)

f. Locate guy wires and anchors in such a manner that they do not interfere with the operation and/or maintenance of the channel, levees, or related structures. No anchors may be placed on the levee.

16. **Low Dams or Diversion of Flows.**

a. Submit plans, hydraulic and structural computations, and specifications for low dams or other obstructions for review and comments prior to the construction of any type dam structure in a project area. These plans will be reviewed to determine if adverse hydraulic or structural effects would occur within the project as a result of the proposed construction. Prior to an extensive engineering study for any type of water barrier in a project, the CESWF and the local sponsor will review the concept plan, proposed location, and purpose.

b. Diversion of flows into or out of a project area shall be reviewed as to possible adverse hydraulic or structural effects.

17. **Process for Abandoning Existing Pipelines.**

a. Requests to abandon existing buried pipelines within a project shall be submitted in writing to CESWF and the local sponsor. No buried line within a floodway may be abandoned without the review and approval of CESWF and the local sponsor.

b. As a minimum, the portion of the abandoned pipeline under a levee shall be completely filled with concrete or grout to prevent seepage through the abandoned line during flood conditions.

c. Abandoned buried pipelines that are located on floodway property, but are not located under a levee shall be plugged at each end with concrete or grout.

d. Any structures associated with abandoned buried pipelines, for example, manholes, shall be removed and the resulting hole filled and compacted in accordance with the provisions in paragraph 4j.

e. Above-ground abandoned pipelines shall be removed from floodway right-of-way, including any associated structures.

18. Construction of Recreation Facilities. Submit plans to the CESWF for review and approval on any proposed recreation type facilities to be constructed in an existing or approved Federal project area. Each plan shall include hydraulic computations and will be reviewed for individual and cumulative effects to determine if the proposed construction would produce adverse effects on an existing or approved project area. If adverse effects on the carrying capacity of the project are determined, the project will be disapproved. The local sponsor may construct minor recreation improvements as needed so long as final as-built plans are provided to CESWF.

19. Planting of Trees Within a Floodway.

a. The purpose of a Federal flood protection project is to carry floodwater through an urban area. Anything in the floodway that restricts flow or can catch floating debris will reduce the carrying capacity below its design limits and will not be allowed. The local sponsor is directed to remove all trees on the

OCT-06-2005 02:59PM FAX:5125365990 ID:TOLLWAY AUTHORITY PAGE:015 R=95%

levees or adjacent to the channel and also as many other trees and obstructions within the floodway as reasonably possible.

b. Planting of trees on the levees will not be allowed nor approved.

c. Planting of additional trees within existing flood protection projects or adjacent to channels is not encouraged and will be evaluated only on a case-by-case basis. Only trees with deep-type root systems and high canopies may be planted in selected areas of existing flood protection projects. The plantings shall be a minimum of 50 feet away from the toe of the levee or the top of the channel bank. Trees may be placed no closer than at an average spacing of 100 feet, center-to-center. Prune trees to permit mowing immediately adjacent with tractor type mowers. No bush or vine type plants will be permitted. Minimum application of ground cover plants for slope protection will be allowed, subject to approval by the local sponsor.

d. Submit a coordinated planting plan with hydraulic computations for review and approval. This plan must also show all existing trees within 1000 feet of the proposed new trees.

CESWF-EC-DG

CAROL J. SHEAD
Publications Control Officer

DISTRIBUTION:

OCT-06-2005 03:00PM FAX:5125365990 ID:TOLLWAY AUTHORITY PAGE:016 R=95%

DEPARTMENT OF THE ARMY
FORT WORTH DISTRICT, CORPS OF ENGINEERS
P. O. BOX 17300
FORT WORTH, TEXAS 76102-0300

NOV 1 6 2005

REPLY TO
ATTENTION OF

Planning, Environmental, and Regulatory Division

Mr. Salvador Deocampo
U.S. Department of Transportation
Federal Highway Administration, Texas Division Office
300 E. 8th Street, Room 826
Austin, Texas 78701

Dear Mr. Deocampo:

I am writing in response to your request that the U. S. Army Corps of Engineers (Corps), as a cooperating agency, explain why we continue to recommend preparation of a supplement to the draft Trinity Parkway Environmental Impact Statement (EIS) dated February 2005. As you may recall, this approach was mutually agreed to at the May 11, 2005 interagency meeting. The primary reasons we believe this approach remains necessary are:

1) The draft EIS did not discuss the alternatives' performance regarding the hydraulic criteria set forth in the Trinity River and Tributaries Regional EIS Record of Decision, dated April 29, 1988.

2) There was no discussion in the draft EIS that address the Corps criteria for construction within the limits of an existing Federal flood protection project and how the alternatives would meet these criteria. All proposed work within a Federal floodway is reviewed in accordance with the provisions of 33 CFR, Section 208.10, pertaining to work in Federally constructed local flood protection projects and Pamphlet No. 1150-2-1, Criteria for Construction Within the Limits of Existing Federal Flood Protection Projects. For a project to be approved by the Corps, it must be determined that any proposed work would not adversely affect the operation and maintenance of the Dallas Floodway and will comply with the provisions of 33 CFR and the guidelines in Pamphlet No. 1150-2-1.

3) The draft EIS did not provide a preliminary determination of compliance with the Clean Water Act Section 404(b)(1) Guidelines for public review.

4) The draft EIS treated the Dallas Floodway Extension Project as a "joint development" project, which it is not. This results in incorrect assumptions regarding benefits and costs to the Trinity Parkway project.

5) The Cumulative Impacts Analysis is inadequate because it does not quantify impacts of reasonably foreseeable projects and instead relies on conclusory statements rather than documenting effects to the environment.

6) The draft EIS did not outline a "Flood Contingency Plan" that should be subsequently developed to describe emergency actions that would be taken when a major flood event threatens the roadway.

As noted in our September 21, 2005 letter to your agency, we have two decisions to make in respect to the Trinity Parkway project. They are: whether or not to authorize the project under Section 404 of the Clean Water Act and Section 10 of the River and Harbor Act and whether or not to approve construction within the limits of an existing Federal flood protection project. Furthermore, prior to authorization of construction of any features in or affecting the Dallas Floodway, we must ascertain that the activity would not unduly interfere with the Corps' or City of Dallas' ability to restore or improve the flood damage reduction capability of the existing Federal project. It is our intent to adopt your final EIS as a basis for these decisions provided it meets our NEPA regulations and policies. This is consistent with recent initiatives to "streamline" the NEPA process and reduce redundancy and paperwork. For the Corps to do so, we believe a supplement to the DEIS needs to be prepared that addresses the above issues and the public is afforded an opportunity to review and comment on the document.

We look forward to discussions on how we can be of assistance in the preparation of the supplement. Please contact Mr. Gene T. Rice, Jr. (817-886-1374) to schedule additional discussion on these important issues.

Sincerely,

Michael J. Mocek, P.E.
Deputy District Engineer

Copies Furnished:
Ms. Anita Wilson, FHWA
Mr. Mike Jansky, EPA
Mr. Greg Ajamian, City of Dallas

DEPARTMENT OF THE ARMY
FORT WORTH DISTRICT, CORPS OF ENGINEERS
P. O. BOX 17300
FORT WORTH, TEXAS 76102-0300

REPLY TO
ATTENTION OF

June 19, 2006

Planning, Environmental, and Regulatory Division
Regulatory Branch

SUBJECT: Project Number 200000308

Mr. David Morgan
Vice President
Halff Associates, Inc.
8616 Northwest Plaza Drive
Dallas, Texas 75225

Dear Mr. Morgan:

This is in reference to your correspondence of September 22, 2004, and follow-up submittals, requesting a U.S. Army Corps of Engineers (USACE) jurisdictional determination for the proposed Trinity Parkway and several other proposed projects by the North Texas Tollway Authority and the city of Dallas that would be located within and around the Trinity River Floodway in the city of Dallas, Dallas County, Texas. Information that you provided to us included a report in a letter dated May 12, 2006, Re: USACE Project #200000308 - Proposed Jurisdictional Determination for the Dallas Floodway and NTTA Trinity Parkway, Dallas Texas, with enclosures, from Mr. Danny Griffith, Halff Associates, to Ms. Jessica Napier, Regulatory Branch, USACE. This project has been assigned Project Number 200000308. Please include this number in all future correspondence concerning this project. Failure to reference the project number may result in a delay.

We have reviewed the site in question in accordance with Section 404 of the Clean Water Act (Section 404) and Section 10 of the Rivers and Harbors Act of 1899 (Section 10). Under Section 404, the USACE regulates the discharge of dredged and fill material into waters of the United States, including wetlands. Our responsibility under Section 10 is to regulate any work in, or affecting, navigable waters of the United States.

On February 23, 2005, Ms. Jessica Napier of my staff conducted a field visit to the site in question to determine the limits of waters of the United States under Section 404 and navigable waters of the United States under Section 10. Based on this field visit, the report that you submitted, and other information available to us, it appears that areas subject to Department of the Army authority under Sections 404 and 10 do exist on the site. We concur with the proposed determination of waters of the United States and navigable waters of the United States that is made in the above referenced report. The basis for this approved jurisdictional determination

(JD) is enclosed. Department of the Army authorization would be required for the discharge of dredged or fill material into waters of the United States or work in, or affecting, navigable waters of the United States.

As you know, the USACE is a cooperating agency, with the Federal Highway Administration as the lead federal agency, in the preparation of an Environmental Impact Statement (EIS) on federal actions associated with the proposed Trinity Parkway project. Please continue to work with us in developing the application for a Department of the Army permit under Section 404 and Section 10, as well as other USACE actions, associated with the project. Please continue to refer to the enclosed USACE, Fort Worth District, "Checklist for Applications for Individual Department of the Army Permits," as well as the numerous discussions that we have had about preparation of the EIS, as guidance about what you should provide to complete the permit application.

This approved JD is valid for a period of no more than five years from the date of this letter unless new information warrants revision of the delineation before the expiration date. It is incumbent upon the applicant to remain informed of changes in the Department of the Army regulations.

The applicant may accept or appeal this approved JD or provide new information in accordance with the enclosed Notification of Administration Appeal Options and Process and Request For Appeal (NAAOP-RFA). If the applicant elects to appeal this approved JD, the applicant must complete Section II (Request For Appeal or Objections to an Initial Proffered Permit) of the enclosure and return it to the Division Engineer, ATTN: CESWD-ETO-R, U. S. Army Corps of Engineers, 1100 Commerce Street, Dallas, Texas 75242-0216 within 60 days of the date of this notice. Failure to notify the USACE within 60 days of the date of this notice means that you accept the approved JD in its entirety and waive all rights to appeal the approved JD.

Thank you for your interest in our nation's water resources. If you have any questions concerning our regulatory program, please contact Ms. Jessica Napier at the address above or telephone (817) 886-1745.

Sincerely,

for Wayne A. Lea
Chief, Regulatory Branch

Enclosure

NOTIFICATION OF ADMINISTRATIVE APPEAL OPTIONS AND PROCESS AND REQUEST FOR APPEAL

Applicant: City of Dallas

File Number: 200000308 Date: June 19, 2006

Attached		See section below
	INITIAL PROFFERED PERMIT (Standard Permit or Letter of Permission)	A
	PROFFERED PERMIT (Standard Permit or Letter of Permission)	B
	PERMIT DENIAL	C
X	APPROVED JURISDICTIONAL DETERMINATION	D
	PRELIMINARY JURISDICTIONAL DETERMINATION	E

SECTION I - The following identifies your rights and options regarding an administrative appeal of the above decision. Additional information may be found at *http://www.usace.army.mil/inet/functions/cw/cecwo/reg/* or Corps regulations at 33 CFR Part 331.

A: INITIAL PROFFERED PERMIT: You may accept or object to the permit.

- ACCEPT: If you received a Standard Permit, you may sign the permit document and return it to the district engineer for final authorization. If you received a Letter of Permission (LOP), you may accept the LOP and your work is authorized. Your signature on the Standard Permit or acceptance of the LOP means that you accept the permit in its entirety, and waive all rights to appeal the permit, including its terms and conditions, and approved jurisdictional determinations associated with the permit.
- OBJECT: If you object to the permit (Standard or LOP) because of certain terms and conditions therein, you may request that the permit be modified accordingly. You must complete Section II of this form and return the form to the district engineer. Your objections must be received by the district engineer within 60 days of the date of this notice, or you will forfeit your right to appeal the permit in the future. Upon receipt of your letter, the district engineer will evaluate your objections and may: (a) modify the permit to address all of your concerns, (b) modify the permit to address some of your objections, or (c) not modify the permit having determined that the permit should be issued as previously written. After evaluating your objections, the district engineer will send you a proffered permit for your reconsideration, as indicated in Section B below.

B: PROFFERED PERMIT: You may accept or appeal the permit

- ACCEPT: If you received a Standard Permit, you may sign the permit document and return it to the district engineer for final authorization. If you received a Letter of Permission (LOP), you may accept the LOP and your work is authorized. Your signature on the Standard Permit or acceptance of the LOP means that you accept the permit in its entirety, and waive all rights to appeal the permit, including its terms and conditions, and approved jurisdictional determinations associated with the permit.
- APPEAL: If you choose to decline the proffered permit (Standard or LOP) because of certain terms and conditions therein, you may appeal the declined permit under the Corps of Engineers Administrative Appeal Process by completing Section II of this form and sending the form to the division engineer. This form must be received by the division engineer within 60 days of the date of this notice.

C: PERMIT DENIAL: You may appeal the denial of a permit under the Corps of Engineers Administrative Appeal Process by completing Section II of this form and sending the form to the division engineer. This form must be received by the division engineer within 60 days of the date of this notice.

D: APPROVED JURISDICTIONAL DETERMINATION: You may accept or appeal the approved jurisdictional determination (JD) or provide new information.

- ACCEPT: You do not need to notify the Corps to accept an approved JD. Failure to notify the Corps within 60 days of the date of this notice, means that you accept the approved JD in its entirety, and waive all rights to appeal the approved JD.
- APPEAL: If you disagree with the approved JD, you may appeal the approved JD under the Corps of Engineers Administrative Appeal Process by completing Section II of this form and sending the form to the division engineer. This form must be received by the division engineer within 60 days of the date of this notice.

E: PRELIMINARY JURISDICTIONAL DETERMINATION: You do not need to respond to the Corps regarding the preliminary JD. The preliminary JD is not appealable. If you wish, you may request an approved JD (which may be appealed), by contacting the Corps district for further instruction. Also you may provide new information for further consideration by the Corps to reevaluate the JD.

SECTION II - REQUEST FOR APPEAL or OBJECTIONS TO AN INITIAL PROFFERED PERMIT		
REASONS FOR APPEAL OR OBJECTIONS: (Describe your reasons for appealing the decision or your objections to an initial proffered permit in clear concise statements. You may attach additional information to this form to clarify where your reasons or objections are addressed in the administrative record.)		
ADDITIONAL INFORMATION: The appeal is limited to a review of the administrative record, the Corps memorandum for the record of the appeal conference or meeting, and any supplemental information that the review officer has determined is needed to clarify the administrative record. Neither the appellant nor the Corps may add new information or analyses to the record. However, you may provide additional information to clarify the location of information that is already in the administrative record.		
POINT OF CONTACT FOR QUESTIONS OR INFORMATION:		
If you have questions regarding this decision and/or the appeal process you may contact: Ms. Jessica Napier at (817) 886-1745	If you only have questions regarding the appeal process you may also contact: Jim Gilmore at (214) 767-2457	
RIGHT OF ENTRY: Your signature below grants the right of entry to Corps of Engineers personnel, and any government consultants, to conduct investigations of the project site during the course of the appeal process.		
_____ Signature of appellant or authorized agent	Date:	Telephone number:

JURISDICTIONAL DETERMINATION
U.S. Army Corps of Engineers

Revised 8/13/04

DISTRICT OFFICE: FORT WORTH
FILE NUMBER: 200000308
PROJECT LOCATION INFORMATION:
State: Texas
County: DALLAS
Center coordinates of site (latitude/longitude): 032-48-50.07 096-50-26.28
Approximate size of area (parcel) reviewed, including uplands: 3,000 acres.
Name of nearest waterway:
Name of watershed: UPPER TRINITY

JURISDICTIONAL DETERMINATION

Completed:	Desktop determination	[ ]	Date:
	Site visit(s)	[X]	Date(s): 23 February 2005

Jurisdictional Determination (JD):

[ ] Preliminary JD - Based on available information, [ ] *there appear to be* (or) [ ] *there appear to be no* "waters of the United States" and/or "navigable waters of the United States" on the project site. A preliminary JD is not appealable (Reference 33 CFR part 331).

[X] Approved JD - An approved JD is an appealable action (Reference 33 CFR part 331).
Check all that apply:

[X] *There are* "navigable waters of the United States" (as defined by 33 CFR part 329 and associated guidance) within the reviewed area. Approximate size of jurisdictional area: 201.26 acres.

[X] *There are* "waters of the United States" (as defined by 33 CFR part 328 and associated guidance) within the reviewed area. Approximate size of jurisdictional area: 303.26 acres.

[ ] *There are "isolated, non-navigable, intra-state waters or wetlands"* within the reviewed area.
[ ] Decision supported by SWANCC/Migratory Bird Rule Information Sheet for Determination of No Jurisdiction.

BASIS OF JURISDICTIONAL DETERMINATION:

A. Waters defined under 33 CFR part 329 as "navigable waters of the United States":
[X] The presence of waters that are subject to the ebb and flow of the tide and/or are presently used, or have been used in the past, or may be susceptible for use to transport interstate or foreign commerce.

B. Waters defined under 33 CFR part 328.3(a) as "waters of the United States":
[X] (1) The presence of waters, which are currently used, or were used in the past, or may be susceptible to use in interstate or foreign commerce, including all waters which are subject to the ebb and flow of the tide.
[ ] (2) The presence of interstate waters including interstate wetlands[1].
[ ] (3) The presence of other waters such as intrastate lakes, rivers, streams (including intermittent streams), mudflats, sandflats, wetlands, sloughs, prairie potholes, wet meadows, playa lakes, or natural ponds, the use, degradation or destruction of which could affect interstate commerce including any such waters (check all that apply):
[ ] (i) which are or could be used by interstate or foreign travelers for recreational or other purposes.
[ ] (ii) from which fish or shellfish are or could be taken and sold in interstate or foreign commerce.
[ ] (iii) which are or could be used for industrial purposes by industries in interstate commerce.
[X] (4) Impoundments of waters otherwise defined as waters of the US.
[X] (5) The presence of a tributary to a water identified in (1) - (4) above.
[ ] (6) The presence of territorial seas.
[X] (7) The presence of wetlands adjacent[2] to other waters of the US, except for those wetlands adjacent to other wetlands.

Rationale for the Basis of Jurisdictional Determination (applies to any boxes checked above). *If the jurisdictional water or wetland is not itself a navigable water of the United States, describe connection(s) to the downstream navigable waters. If B(1) or B(3) is used as the Basis of Jurisdiction, document navigability and/or interstate commerce connection (i.e., discuss site conditions, including why the waterbody is navigable and/or how the destruction of the waterbody could affect interstate or foreign commerce). If B(2, 4, 5 or 6) is used as the Basis of Jurisdiction, document the rationale used to make the determination. If B(7) is used as the Basis of Jurisdiction, document the rationale used to make adjacency determination:* The streams are tributaries to the Trinity River, a navigable water of the United States and the wetlands are located adjacent to, within the floodplain of, the Trinity River or tributaries to the Trinity River. The ponds are impoundments of tributaries to navigable waters of the United States.

Lateral Extent of Jurisdiction: (Reference: 33 CFR parts 328 and 329)

[X] Ordinary High Water Mark indicated by:
- [X] clear, natural line impressed on the bank
- [X] the presence of litter and debris
- [X] changes in the character of soil
- [X] destruction of terrestrial vegetation
- [ ] shelving
- [ ] other:

[ ] High Tide Line indicated by:
- [ ] oil or scum line along shore objects
- [ ] fine shell or debris deposits (foreshore)
- [ ] physical markings/characteristics
- [ ] tidal gages
- [ ] other:

[ ] Mean High Water Mark indicated by:
[ ] survey to available datum; [ ] physical markings; [ ] vegetation lines/changes in vegetation types.

[X] Wetland boundaries, as shown on the a report titled "USACE Project #200000308 - Proposed Jurisdictional Determination for the Dallas Floodway and NTTA Trinity Parkway, Dallas Texas", dated May 23, 2006, prepared by Halff Associates

Basis For Not Asserting Jurisdiction:

[ ] The reviewed area consists entirely of uplands.
[ ] Unable to confirm the presence of waters in 33 CFR part 328(a)(1, 2, or 4-7).
[ ] Headquarters declined to approve jurisdiction on the basis of 33 CFR part 328.3(a)(3).
[ ] The Corps has made a case-specific determination that the following waters present on the site are not Waters of the United States:
- [ ] Waste treatment systems, including treatment ponds or lagoons, pursuant to 33 CFR part 328.3.
- [ ] Artificially irrigated areas, which would revert to upland if the irrigation ceased.
- [ ] Artificial lakes and ponds created by excavating and/or diking dry land to collect and retain water and which are used exclusively for such purposes as stock watering, irrigation, settling basins, or rice growing.
- [ ] Artificial reflecting or swimming pools or other small ornamental bodies of water created by excavating and/or diking dry land to retain water for primarily aesthetic reasons.
- [ ] Water-filled depressions created in dry land incidental to construction activity and pits excavated in dry land for the purpose of obtaining fill, sand, or gravel unless and until the construction or excavation operation is abandoned and the resulting body of water meets the definition of waters of the United States found at 33 CFR 328.3(a).
- [ ] Isolated, intrastate wetland with no nexus to interstate commerce.
- [ ] Prior converted cropland, as determined by the Natural Resources Conservation Service. Explain rationale:
- [X] Non-tidal drainage or irrigation ditches excavated on dry land. Explain rationale: There are approximately 115.82 acres of upland drainage ditches within the study area.
- [ ] Other (explain):

DATA REVIEWED FOR JURISDICTIONAL DETERMINATION (mark all that apply):

[X] Maps, plans, plots or plat submitted by or on behalf of the applicant.
[X] Data sheets prepared/submitted by or on behalf of the applicant.
[X] This office concurs with the a report titled "USACE Project #200000308 - Proposed Jurisdictional Determination for the Dallas Floodway and NTTA Trinity Parkway, Dallas Texas", dated May 23, 2006, prepared by Halff Associates.
[ ] This office does not concur with the delineation report, dated , prepared by (company):
[ ] Data sheets prepared by the Corps.
[ ] Corps' navigable waters' studies:
[ ] U.S. Geological Survey Hydrologic Atlas:
[X] U.S. Geological Survey 7.5 Minute Topographic maps: Dallas, Texas
[ ] U.S. Geological Survey 7.5 Minute Historic quadrangles:
[ ] U.S. Geological Survey 15 Minute Historic quadrangles:
[ ] USDA Natural Resources Conservation Service Soil Survey:
[ ] National wetlands inventory maps:
[ ] State/Local wetland inventory maps:
[ ] FEMA/FIRM maps (Map Name & Date):
[ ] 100-year Floodplain Elevation is: (NGVD)
[ ] Aerial Photographs (Name & Date):
[ ] Other photographs (Date):
[ ] Advanced Identification Wetland maps:
[ ] Site visit/determination conducted on:
[ ] Applicable/supporting case law:
[ ] Other information (please specify):

[1]Wetlands are identified and delineated using the methods and criteria established in the Corps Wetland Delineation Manual (87 Manual) (i.e., occurrence of hydrophytic vegetation, hydric soils and wetland hydrology).
[2]The term "adjacent" means bordering, contiguous, or neighboring. Wetlands separated from other waters of the U.S. by man-made dikes or barriers, natural river berms, beach dunes, and the like are also adjacent.

NORTH TEXAS TOLLWAY AUTHORITY

Paul N. Wageman
Chairman

Jack Miller
Vice Chairman

Gary Base
Director

David R. Denison
Director

William W. Meadows
Director

Robert Shepard
Director

Alan E. Sims
Director

Jerry Hiebert
Acting
Executive Director

Rick Herrington
Acting Deputy
Executive Director

Susan A. Buse
Chief Financial Officer

Debbie Smith
Secretary

P.O. Box 260729
Plano, TX 75026

5900 W. Plano Parkway
Suite 100
Plano, TX 75093

214-461-2000

214-528-4826 (Fax)

www.ntta.org

April 4, 2007

The Honorable Laura Miller, Mayor
City of Dallas
Dallas City Hall
1500 Marilla Street, Room 5EN
Dallas, TX 75201-6390

Dear Mayor Miller:

In the Dallas Morning News article of November 17, 2006, the U.S. Army Corps of Engineers first made public its concerns with Alternative 3B, stating that the Parkway "...could've potentially violated the structural integrity" of the eastern levee. Subsequently, a host of questions are being asked, relating to the Trinity Parkway's viability, as well as the advisability of placing it in close proximity to the City's proposed system of parks, lakes and trails. As various elected officials have recently echoed these concerns and/or requested a re-consideration of Alternative 3B as the City's recommended alignment, I wanted to briefly summarize NTTA's position with respect to these discussions and the City's possible pursuit of a new alternative, our continuing close work with the USACE to resolve its concerns, and to address the misinformation which is being circulated about the project.

Unfortunately, questioning the need for the toll-road or its location is not a new phenomenon. As you recall, at the May 2002 Dallas City Council Trinity Workshop, the City Council elected to revisit the assumptions and results of previous NTTA / TxDOT studies, *to ensure that all alternatives have been assessed and that the resultant facility is compatible with the proposed levee park system.*

To ensure the objectivity of this reassessment, private funds were raised to support this study, with the reassessment being coordinated by three, independent, cooperating entities – The Dallas Plan, Dallas AIA and the Dallas Institute of Humanities and Culture. Ultimately, Chan Krieger and Associates, joined by Hargreaves & Associates and TDA comprised the consultant team, which became known as the Urban Design Team (UDT). In addition to developing a concept for a world-class park system, the UDT was charged with determining whether a roadway was necessary, and if so, had the previous studies located it properly. Over approximately a six month period, previous studies, assumptions

and analyses were rigorously reviewed; this review was complemented by a series of workshops and roundtable discussions with NCTCOG, TxDOT and NTTA. *At the conclusion of this study, the UDT independently concluded that the road was needed and that the corridors under assessment by NTTA met this need.*

After an additional 12 months of study and approximately $1 million, the UDT, in conjunction with USACE, TxDOT, NCTCOG and NTTA developed Alternative 3B as an integral component of the Trinity River's Balance Vision Plan (BVP). The BVP's key objectives are: Economic & Community Development, Flood Control, Recreation and Open Space, Environmental Management and Multi-modal Transportation.

In April 2005, the Dallas City Council and the NTTA Board of Directors subsequently passed resolutions identifying Alternative 3B as their recommended locally preferred alternative. The Board recognized the early state of the Trinity Parkway's environmental evaluation and conditioned its recommendation of 3B to acknowledge that the alternative may require modification based upon: 1) the approval of various federal and state resource agencies, i.e., the USACE; 2) future events and / or; 3) changing environmental regulations.

The NTTA acknowledges that the USACE must approve any construction within the floodway. Since fall 2005, the USACE has been re-assessing its design guidelines. It is our understanding that the initial release of the new standards will not take place for approximately one year. In addition, this release will likely be in the form of incremental revisions, each release addressing a different floodway design aspect. The NTTA has already requested receipt of the new standards as soon as they are available. On an interim basis we continue to request direction from the USACE regarding certain aspects of floodway design so that we may adjust our design now to meet future criteria.

The purpose of the environmental documents currently being prepared is to provide the information needed by elected officials and the general public to make an informed decision regarding all of the alternatives considered, including Alternative 3B. One of the tenants of this federal process is to provide equal access to this information to everyone at the approximately the same time. Given the complexity of this project, the Draft Environmental Impact Statement (DEIS), released February 2005, alluded to the possible necessity of producing a supplemental document, in addition to DEIS and the Final Environmental Impact Statement.

Three environmental documents have been or will be prepared for the Trinity Parkway: the Draft Environmental Impact Statement (released February 2005), the Supplemental Draft Environmental Impact Statement (planned third quarter of 2007) and the Final Environmental Impact Statement (anticipated 2008). More information on hydraulics, cumulative and indirect effects, and other subject areas will be provided in the Supplemental DEIS, on all of the Alternatives. At that time, both the Dallas City Council and the NTTA Board of Directors will be asked to reaffirm or modify their support of Alternative 3B, or to recommend a different alternative.

From our latest conversations with the USACE, its floodway design standards will likely further minimize the viability of several alternatives in the DEIS. For instance, the requirement that any proposed construction be offset a minimum of 50 feet from the levee's toe of slope may make any of the landside alternatives much less desirable because of the far greater property acquisitions that would be required and more significant impacts to the sumps / drainage systems. In addition, the Industrial Blvd option, always the most expensive alternative, has seen even further development within the potential corridor, making right-of-way acquisition more disruptive to adjacent properties and certainly more expensive than originally projected.

As a partnering agency with the City, we are troubled that once again there seems to be an attempt to unilaterally remove the transportation element from the Trinity Balanced Vision Plan without regard to regional transportation needs and without identification of suitable alternatives to meet those needs. At the municipal level, such a move would also adversely impact several synergistic benefits a levee alternative offers both our agencies, such as NTTA's plan to excavate the lakes and use this material to form the bench for the Parkway – at an estimated value of $25 million.

The best project-related decision making is that conducted within the National Environmental Policy Act (NEPA) planning process. With nearly ten years of history of working with the City on this important and challenging project, we remain committed to working with the City and the project's cooperating agencies to implement a plan that best meets the needs of the city and the region.

Sincerely,

Jerry Hiebert
Acting Executive Director, NTTA

cc: NTTA Board of Directors
Michael Morris, NCTCOG
William Hale, PE, Dallas District, TxDOT

DEPARTMENT OF THE ARMY
FORT WORTH DISTRICT, CORPS OF ENGINEERS
P. O. BOX 17300
FORT WORTH, TEXAS 76102-0300

REPLY TO
ATTENTION OF

APR 30 2007

Programs and Project
Management Division

Honorable Laura Miller
Mayor of Dallas
1500 Marilla, Room 5EN
Dallas, Texas 75201

Dear Mayor Miller:

In recent weeks, several misstatements have been publicly attributed to the U.S. Army Corps of Engineers (Corps) regarding the Dallas Floodway/Trinity Parkway projects. The purpose of this letter is to identify and clarify or correct these statements.

The Dallas Floodway (Floodway) is a Federal Flood Protection project authorized by Congress and under the jurisdiction of the Corps. Prior to alteration or modification of the existing Floodway, the Corps must review and consent to the proposed alteration or modification to ensure that there is no adverse impact to either the structural or functional aspects of the Floodway which would, in any manner, diminish the level of protection provided by the Floodway to the City of Dallas (City). In addition to ensuring the integrity and function of the existing Floodway, the Corps is actively engaged in extending flood protection structures within the City and in studying the future flood protection needs of the City. The Corps (in partnership with City through an agreement with the North Central Texas Council of Governments) is currently studying the feasibility of improving the Floodway (channel and levees) to provide an enhanced level of protection to the City. Additionally, the Corps, through a cooperative agreement directly with the City, is constructing the Dallas Floodway Extension project (levee and a chain of wetlands) to extend the flood damage reduction, ecosystem restoration, and recreation features for the City along the Trinity River.

An Environmental Impact Statement (EIS) is currently being prepared for the Trinity Parkway (Parkway) as a cooperative effort by the City, North Texas Tollway Authority (NTTA), Texas Department of Transportation, and Federal Highway Administration. The purpose of the EIS is to identify and analyze the environmental impacts of an array of alternatives for a proposed action. The initial proposal from the City and NTTA was to construct the Parkway within the limits of the existing Dallas Floodway. In 1999, the

Corps advised the City and NTTA that current policies would not prohibit construction of a roadway within the limits of the Floodway, but that such alternatives would be subject to stringent technical criteria to ensure the level of protection provided by the Floodway would not be compromised. Alternatives for the Parkway have included locations inside and outside the existing Floodway. As the design details for the alternatives progressed, our level of concern regarding potential impacts to the integrity of the levee system increased, mainly due to proposed excavation and penetration of the levees in certain areas. In October 2006, the Corps informed the NTTA that the designs for alternatives reflecting construction of the roadway on the levee were unacceptable due to concerns with the effect of the roadway on the structural integrity of the levees and the ability of the Corps and other governmental agencies to access and maintain the levees. The NTTA was not advised how far off the levee the Parkway should be located. Instead, the distance off the levees is mandated by design features of the Parkway, including the spacing of the columns supporting the existing bridges across the floodway. While the requirements for approval of this project are challenging, the Corps and NTTA are committed to working towards acceptable and safe solutions for locating and designing this road in the floodway.

Regarding the potential for inundation of the Trinity Parkway in a flood event, let me provide additional information concerning the probability of such an event. The existing Floodway was designed to protect the city from an approximate 800-year flood. This flood frequency equates to a 1 in 800 chance of occurrence in any given year. The Parkway is being designed at a 100-year level of protection, meaning there is a 1 in 100 chance in any given year that the Parkway could be flooded. Furthermore, the Corps is requiring that the Trinity Parkway be additionally protected with two feet above the 100-year flood level. Since the level of flood protection afforded the Parkway is less than that provided by the levee system, it is possible that the Parkway could flood due to water contained in the Floodway by the levees. However, the last 100-year flood event was the 1908 flood of record.

The Corps has also advised the NTTA that, under the provisions of the contract between the Corps and the City for operation and maintenance of the existing Floodway, the City (acting as the operator and maintainer of the Federal project) has the right to remove portions of the Parkway, if it is required for repair or maintenance of the levee, or for flood fighting activities. The language is typical in all agreements and construction approval documents for projects being constructed within the limits of a Corps project. Although it is unlikely that removal of a portion of the Parkway will be required, the right to do so still exists if needed to ensure the Floodway system functions as authorized for flood protection and public safety.

It has been reported that due to levee failures during Hurricane Katrina, the Corps is developing a new set of standards for levees. That statement is not accurate. Although the Corps is re-evaluating the use and design of a certain type of flood wall, no new standards are being developed for the types of flood damage reduction measures (levees) in the existing Floodway project. Additionally, the NTTA has not requested a waiver of the standards for construction within the existing Federal project. We believe the confusion over this issue arose following release of a memorandum from the Corps Headquarters in October 2006, which clarified the procedures for approval of modifications to existing Federal projects nationwide. This memorandum identified the Chief of Engineers, and not the local District office, as the approval authority for any significant modification of a Federal project. This new construction approval process will ensure that proposed changes to the Dallas Floodway will not adversely affect flood protection for the City of Dallas.

Finally, I would like to address the relationship between the potential levee raise by the Corps, and the other projects within the Floodway. As stated earlier, the Corps and the City are studying the feasibility of improving the existing Floodway to provide a greater level of protection to the city of Dallas. The alternatives being evaluated for this improvement include, among other things, levee raises of varying heights. If the proper type of soil is found in the areas identified by the City for lake excavations, or in other areas of the Floodway, this soil could be used to raise the existing levees. However, if the soil in these potential excavation areas is found to be not suitable for the levee raise, the Corps would not be able to participate in these excavations. This determination will be made in the process of completing the Corps Feasibility Report

The final Corps Feasibility Report, which will identify the recommended plan for improvements to the Floodway for flood damage reduction purposes, is currently scheduled for completion in August 2008, with a Record of Decision in December 2008. Subsequent to the completion of the report, the project must be authorized and funded by Congress, and detailed design must be completed prior to the advertisement and award of a construction contract.

Thank you for the opportunity to clarify this information. Please contact Mr.Gene Rice, Project Manager at 817-886-1374 if you have any questions.

Sincerely,

Christopher W. Martin
Colonel, Corps of Engineers
District Commander

4 December 2007

David Morgan
Vice President
Halff Associates, Inc.
1201 North Bowser Rd.
Richardson, TX 75081

Dear Mr. Morgan:

I have reviewed the map for the Supplemental Draft Environmental Impact Statement. The project I coordinate does not survey this area, and we have not attempted to make any sightings there. Even though I have no records of sightings of interior least terns within the study boundary, the terns could potentially be nesting there. It should be noted that the area contains large sections that are industrialized and inaccessible to local bird watchers, so a lack of sightings cannot be interpreted to mean the birds are not present.

The two requirements for the least terns to nest in an area are a feeding source and a nesting source. The Trinity River is probably not a high-quality feeding source but the various local retention and stormwater ponds are. The study area does not appear to contain any sandbars, which are natural nesting sites. The terns in the greater Dallas area, however, nest at unnatural sites. We find terns nesting on top of various warehouses in northwestern Dallas County and southeastern Denton County. The one feature that is similar to all of the warehouses is that they have a gravel roof. It appears from the map that there are some areas that contain similar warehouses inside the study boundary. Surveys during late June or early July would be the best method to accurately determine whether the terns are nesting in the area.

Another consideration for interior least terns is that the construction activities could actually create nesting habitat, which could attract terns to the site. The terns like highly disturbed areas and frequently nest at active sand and gravel pits. The closest colony that nests on the ground is a mere 10 miles away. Monitoring of the construction site would be a prudent measure to ensure no harm comes to the species.

Sincerely,

Jeanette Boylan

Jeanette T. Boylan, Ph.D.
Zoologist
Dallas Zoo
650 South R. L. Thornton Fwy.
Dallas, TX 75203
Ph: 214-671-0774
Fax: 214-670-6717
jeanette.boylan@dallascityhall.com

Dallas District

Texas Department of Transportation

DEWITT C. GREER STATE HIGHWAY BLDG. • 125 E. 11TH STREET • AUSTIN, TEXAS 78701-2483 • (512) 463-8585

January 30, 2008

TEXAS DEPARTMENT OF TRANSPORTATION
DISTRICT NO. 18

FEB - 1 2008

STP ( )
Request for Coordination with USCG
for Exemptions
Dallas County
CSJ 0918-45-121

Trinity Parkway: From SH 183/IH 35E to US 175/SH 310

Janice W. Brown
Division Administrator
Federal Highway Administration
Austin, Texas 78701

Attention: Mr. Peter Chang

Dear Ms. Brown:

The North Texas Tollway Authority is preparing a Supplemental Draft Environmental Impact Statement for the Trinity Parkway project. Of the eight build alternatives being assessed, six alternatives are located along the Dallas Floodway levees, with five alternatives located on the river side of the levee (Alternatives 3A, 3B, 3C, 4A and 4B), and one alternative (Alternative 5) located on the land side of the levee.

Although the Trinity River is officially designated a navigable waterway, the upper portion of the Trinity River has never been developed, or used for that purpose. According to the United States Army Corps of Engineers (USACE), navigation on the Trinity River (known as the Trinity River Project) was authorized by the Rivers and Harbors Act of 1965, Public Law 89-289. A previous Trinity River Project included the construction of a multiple purpose channel along the river, from the Houston Ship Channel to Fort Worth, Texas.

Subsequent to this authorization, Congress requested a restudy of the navigation features of the Trinity River Project to reaffirm its economic feasibility. These studies indicated that the extension of the multiple purpose channel to any point upstream of Liberty, Texas (approximately 50 miles above the mouth of the river) was not economically feasible. Moreover, a bond election to finance the multiple purpose channel was defeated in 1973.

THE TEXAS PLAN
REDUCE CONGESTION • ENHANCE SAFETY • EXPAND ECONOMIC OPPORTUNITY • IMPROVE AIR QUALITY
INCREASE THE VALUE OF OUR TRANSPORTATION ASSETS

An Equal Opportunity Employer

In 1981, a General Design Memorandum from USACE stated that the multiple purpose channel was not economically feasible upstream of Liberty; therefore, it was dropped from further design consideration. Presently, the multiple purpose channel is officially considered inactive. According to USACE, there are no further plans to develop the Trinity River as a navigation channel.

Accordingly, the Trinity River channel is not susceptible to use (in its natural condition or by reasonable improvement), as a means to transport interstate or foreign commerce. Moreover, the affected waterway is non-tidal and carries no navigation or shipping of any kind. Therefore, assuming the possible selection of one of the six levee alternatives, and pursuant to 23 U.S.C. 144(h), the selected levee alternative should qualify for exemption from the requirements imposed under 33 U.S.C. 401 and 525(b), and the lighting and signal requirements imposed under 33 CFR 118.40(b).

TxDOT requests that this letter and attachments be forwarded to Mr. Peter Chang so that he may coordinate with the USCG to receive the necessary (signed) exemptions. If you have questions, please contact Elvia Gonzalez at 416-2610.

Sincerely,

James P. Barta, Jr.

James P. Barta, Jr., P.E.
Director, Project Management Section
Environmental Affairs Divison

Attachments

EG:e
bcc: Dallas District
ERG

Reference: ENV 850

U.S. Department of Homeland Security

United States Coast Guard

Commandant
United States Coast Guard
Hale Boggs Federal Building

500 Poydras Street, Room 1313
New Orleans, LA 70130-3310
Staff Symbol: dpb
Phone: (504) 671-2128
Fax: (504) 671-2133

16591C
13 November 2008

MEMORANDUM

From: David M. Frank
CGD EIGHT (dpb)

To: Hector Garcia, Assistant Bridge Engineer
Federal Highway Administration

RECEIVED ON
NOV 2 0 2008
TEXAS DIVISION
FHWA

Subj: STA ACT CONCURRENCE

1) Please refer to your letter dated 28 October 2008, regarding the Texas Department of Transportation's proposed project to construct a limited-access toll facility between the IH-35E/SH-183 and the US-175/SH-310 interchanges. Three of the proposed alternatives have bridge crossings over the Trinity River in Dallas County, Texas. You have determined that this project meets the criteria for the Surface Transportation Authorization Act (STAA) and qualifies for exemption from Coast Guard bridge permit requirements.

2) Section 144(h) of Title 23 U.S. Code was enacted in 1978 to reduce paperwork and related cost in the executive of the Coast Guard's bridge permit programs. This section has been amended by the Act of April 2, 1987 (Public Law 100-17), to further reduce paperwork and related costs in the permitting of bridges funded by this Act. By reason of this provision, certain bridges – which are constructed, reconstructed, rehabilitated, or replace with federal assistance imposed under Title 23 U.S. Code – are no longer subject to the permitting requirements imposed under 33 U.S.C. 401 and 525(b). The bridges which fall into this excluded category are those that cross waterways:

   (1) which are not used and are not susceptible to use in their natural condition or by reasonable improvement as a means to transport interstate or foreign commerce; and

   (2) which are: nontidal; or if tidal, used by vessels less than 21 feet in length.

3) Since FHWA has the responsibility for the STAA and based on the information provided by the Texas Department of Transportation, the Coast Guard accepts your determination that this bridge project meets the criteria for the STAA and is exempted from Coast Guard Bridge Administration purposes.

4) Based on your statement that no significant nighttime navigation occurs at these sites and pursuant to Title 33 of the Code of Federal Regulations, Part 118.40, the proposed project is hereby exempt from Coast Guard navigational lighting requirements. The later statute requires the establishment, maintenance, and operation of Coast Guard required lights and signals on fixed structures, including bridges. These exemptions are subject to review and revocation in the future provided conditions change or are found to differ significantly from those indicated in your request.

#

prj:D8Shares:dpb:\Surface Transportation Act\STAA-TX\Trinity River, Trinity Parkway, Dallas County, 11-13-08

U.S. Department
of Transportation
**Federal Highway
Administration**

Texas Division

300 E. 8th Street, Room 826
Austin, Texas 78701

February 2, 2009

In Reply Refer To: HA-TX

STP ( )
Request for Section 4(f) Determination
Dallas County
CSJ 0918-45-121

Elvia Gonzalez
Project Management Section
Environmental Affairs Division
Texas Department of Transportation
Austin, Texas

Dear Ms. Gonzalez

Reference is made to your January 6, 2009 letter requesting Federal Highway Administration's (FHWA) determination regarding Section 4(f) applicability for the Trinity River Greenbelt Park in accordance with 23 CFR § 774.11. Previously FHWA was in receipt of the Trinity Parkway Dallas Floodway Ownership Research for the Trinity River Greenbelt Park and that documentation was reviewed in addition to the summary provided in the memorandum addressed to Ms. Noble from the Dallas District. The deed research from 2004 focused on the Stemmons parcel, land between Westmoreland Road and the Atchison Topeka & Santa Fe (AT&SF) Railroad Bridge. The Greenbelt land within this boundary meets the criteria for a joint development (reserved transportation use within a park) and therefore Section 4(f) requirements do not apply to use of this land.

The proposed alternatives do, however, appear to use land within the Greenbelt (actually Great Trinity Forest) that fall outside of the boundaries of the Stemmons deed (those lands to the south of the AT&SF bridge). We need clarification on 1) what the involvement of the alternatives (all that apply) that traverse land inside the Great Trinity Forest to the south of the AT&SF bridge will be (detailed ROW overlays that clearly show if land from within the Great Trinity Forest south of AT&SF bridge will be converted to a transportation use) and if land south of the AT&SF bridge from the Great Trinity Forest will be incorporated into the transportation project, 2) deed or other land ownership information that specifies the intended use/function for these lands. Depending on the information that would be provided it is possible that this section of the Great Trinity Forest may be subject to the requirements of Section 4(f).

RECEIVED
FEB 03 2009
ENV-PM

MOVING THE
AMERICAN
ECONOMY

Should you have any questions, please contact Anita N. Wilson at 512-536-5951.

Sincerely

Salvador Deocampo
District Engineer

APPENDIX G-7

AGENCY AND PUBLIC PARTICIPATION EVENTS

THIS PAGE INTENTIONALLY LEFT BLANK

APPENDIX G-7. Agency and Public Participation Events.

This section supplements the information contained in **Appendix A-2**. The events shown below are added to the agency and public participation events listed in **Appendix A-2, pages 1-11**:

DATE	CATEGORY	EVENT
December 7, 2004	IET	Trinity Interagency Executive Team* Meeting
December 10, 2004	BF	Dallas Mayor's Meeting with NTTA and TxDOT
December 14, 2004	OP	Meeting with Okon Metals re its property
December 16, 2004	BF	South Dallas Local and State Elected Officials
January 12, 2004	AC	Meeting with EPA, NTTA, FHWA, TxDOT and City of Dallas
January 13, 2005	BF	Dallas Mayor's Meeting with NTTA and TxDOT
January 25, 2005	IET	Trinity Interagency Executive Team Meeting
January 28, 2005	BF	South Dallas Local and State Elected Officials
February 15, 2005	CAWG	Conducted CAWG Meeting
February 22, 2005	IET	Trinity Interagency Executive Team Meeting
February 25, 2005	OP	Booth at the Annual Trinity Commons Luncheon
March 4, 2005	BF	Dallas Mayor's Meeting with NTTA and TxDOT
March 22, 2005	IET	Trinity Interagency Executive Team Meeting
March 29, 2005	PH	Public Hearing and Open House at the Dallas Convention Center Arena
April 12, 2005	AC	Meeting of the City of Dallas, NTTA, LLS and USACE
April 26, 2005	IET	Trinity Interagency Executive Team Meeting
May 11, 2005	AC	Meeting of the City of Dallas, NTTA, FHWA, LLS, USACE, and EPA
May 24, 2005	IET	Trinity Interagency Executive Team Meeting
June 28, 2005	IET	Trinity Interagency Executive Team Meeting
July 26, 2005	IET	Trinity Interagency Executive Team Meeting
August 10, 2005	AC	Meeting of the City of Dallas, NTTA, FHWA, USACE, and EPA
August 12, 2005	BF	Meeting of City of Dallas and ExxonMobil re Commonwealth Campus
August 12, 2005	BF	Dallas Mayor's Meeting with NTTA and TxDOT
September 2, 2005	AC	Meeting of the City of Dallas, NTTA, FHWA, USACE, and EPA
September 2, 2005	AC	Meeting with the City of Dallas
September 15, 2005	BF	Meeting with City of Dallas Councilman Leo Chaney
September 20, 2005	AC	TxDOT Design Concept Conference on the Woodall Rodgers Freeway extension
September 27, 2005	IET	Trinity Interagency Executive Team Meeting
September 29, 2005	AC	Meeting with the City of Dallas re floodway park access
October 4, 2005	OP	Trinity Commons Meeting
October 14, 2005	AC	Meeting with the City of Dallas
October 14, 2005	AC	Meeting with USACE
October 24, 2005	OP	South Dallas Planning Workshop (Forward Dallas)
October 25, 2005	IET	Trinity Interagency Executive Team Meeting

DATE	CATEGORY	EVENT
November 1, 2005	AC	Meeting with USACE
November 16, 2005	AC	Meeting with FHWA, EPA, USACE, TxDOT, NTTA, City of Dallas
November 17, 2005	IET	Trinity River Executive Team Meeting
November 22, 2005	AC	Meeting with USACE, FHWA, City of Dallas and NTTA
December 1, 2005	OP	Dallas County - Transportation
December 13, 2005	AC	Scoping Meeting for USACE Trinity River Floodway EIS
January 3, 2006	AC	Meeting with USACE
January 26, 2006	AC	Meeting with TxDOT re antiquities permit and historic structures report overview
January 27, 2006	IET	Trinity Interagency Executive Team Meeting
February 8, 2006	AC	Meeting with TxDOT ENV and FHWA to provide overview of SDEIS draft
February 10, 2006	AC	Meeting with USACE to discuss archaeological trenching
February 21, 2006	AC	Meeting with USACE to review GIS and vegetation mapping
February 28, 2006	IET	Trinity Interagency Executive Team Meeting
March 2, 2006	AC	Meeting with TxDOT ENV
March 28, 2006	IET	Trinity Interagency Executive Team Meeting
April 27, 2006	AC	Meeting with TxDOT/Dallas re Sylvan Bridge
April 28, 2006	AC	Meeting with USACE to review comments
May 1, 2006	AC	Meeting with USACE
May 4, 2006	AC	Meeting with Dallas Floodway Management Department
May 23, 2006	IET	Trinity Interagency Executive Team Meeting
June 27, 2006	IET	Trinity Interagency Executive Team Meeting
July 25, 2006	IET	Trinity Interagency Executive Team Meeting
August 1, 2006	AC	Meeting with USACE and DART
August 28, 2006	IET	Trinity Interagency Executive Team Meeting
September 26, 2006	IET	Trinity Interagency Executive Team Meeting
October 11, 2006	AC	Meeting with City of Dallas and NTTA
October 24, 2006	AC	Meeting with USACE
October 24, 2006	IET	Trinity Interagency Executive Team Meeting
November 2, 2006	AC	Meeting with City of Dallas Floodway Operations
November 3, 2006	AC	Meeting with USACE
November 7, 2006	AC	Meeting with NTTA, FHWA, USACE and City of Dallas
November 24, 2006	IET	Trinity Interagency Executive Team Meeting
December 14, 2006	AC	Coordination meetings with City of Dallas and Lake Design Consultants
December 20, 2006	AC	Coordination meetings with City of Dallas and Lake Design Consultants
January 23, 2007	IET	Trinity Interagency Executive Team Meeting
February 15, 2007	AC	NTTA, FHWA, USACE, and EPA Coordination Meeting in Washington, DC
February 20, 2007	IET	Trinity Interagency Executive Team Meeting
March 13, 2007	AC	NTTA, USACE, and City of Dallas Coordination Meeting
March 27, 2007	IET	Trinity Interagency Executive Team Meeting

DATE	CATEGORY	EVENT
April 3, 2007	BF	Briefing for the City of Dallas
April 24, 2007	IET	Trinity Interagency Executive Team Meeting
April 27, 2007	PM	Greater Dallas Chamber of Commerce Public Works Forum
May 22, 2007	IET	Trinity Interagency Executive Team Meeting
June 5, 2007	AC	Geotechnical Work Group Meetings
June 19, 2007	IET	Trinity Interagency Executive Team Meeting
June 25, 2007	AC	Coordination on Context Sensitive Design with NTTA and City of Dallas
June 28, 2007	AC	Attend Trinity Lakes Design Team Meeting
July 9, 2007	AC	Hydraulics Workgroup Meeting
July 24, 2007	IET	Trinity Interagency Executive Team Meeting
August 23, 2007	AC	Attend Trinity Lakes Design Team Meeting
August 28, 2007	IET	Trinity Interagency Executive Team Meeting
September 6, 2007	IET	Trinity Interagency Executive Team Meeting
September 11, 2007	IET	Trinity Interagency Executive Team Meeting
September 17, 2007	AC	Dallas Mayor's Meeting with NTTA, TxDOT, and USACE
September 18, 2007	AC	Hydraulic Work Group Meeting
September 20, 2007	PM	Attended meeting hosted by Senator Royce West and Commissioner John Wiley Price on Trinity Project
September 25, 2007	IET	Trinity Interagency Executive Team Meeting
September 25, 2007	AC	Geotechnical Work Group Meeting
October 23, 2007	IET	Trinity Interagency Executive Team Meeting
December 4, 2007	IET	Trinity Interagency Executive Team Meeting
December 11, 2007	AC	Agency Scheduling Coordination Meeting, FHWA, USACE, TxDOT, NTTA, City of Dallas
January 8, 2008	BF	Briefing to City of Dallas Trinity River Corridor Committee
January 18, 2008	AC	Mayor's Summit Coordination Meeting with FHWA, TxDOT, USACE, NTTA, EPA and the City of Dallas
January 22, 2008	IET	Trinity Interagency Executive Team Meeting
January 23, 2008	AC	NTTA Coordination with City of Dallas Lake Design Team
January 30, 2008	OP	Bus Tour of Trinity Project with City of Dallas, Urban Land Institute and the Real Estate Council
February 5, 2008	BF	Briefing to City of Dallas Trinity River Corridor Committee
February 21, 2008	AC	Design Guidelines Workshop with City of Dallas, TxDOT and THC
February 26, 2008	IET	Trinity Interagency Executive Team Meeting
March 5, 2008	AC	Coordination meeting between USACE, NTTA, and City of Dallas Lake Design Team for Section 404 Review Process
March 20, 2008	AC	Meeting at Texas Historical Commission (THC) in Austin to review Cultural Resources with NTTA, TxDOT Dallas District, THC and FHWA
March 25, 2008	IET	Trinity Interagency Executive Team Meeting
March 26, 2008	AC	Coordination meeting with NTTA and TxDOT Dallas District related to noise impacts within Dallas Floodway from Trinity Parkway

DATE	CATEGORY	EVENT
March 29, 2008	AC	Design Guidelines Workshop with City of Dallas, Dallas Lake Design Team, NTTA, and USACE
April 22, 2008	IET	Trinity Interagency Executive Team Meeting
May 2, 2008	AC	Coordination meeting with City of Dallas, Dallas Lake Design Team, and NTTA to review the excavation plan and H&H results
May 9, 2008	AC	Dallas Lake Design Team and NTTA coordination and review of Noise Model and Field Measurements
May 19, 2008	AC	Cultural Resource Agency Coordination meeting and bus tour with City of Dallas Landmark Commission, Preservation Dallas, THC, TxDOT-ENV, TxDOT Dallas District, USACE, FHWA, and NTTA
May 20, 2008	AC	Review and refine project schedule with City of Dallas, USACE and NTTA
May 27, 2008	IET	Trinity Interagency Executive Team Meeting
May 29, 2008	AC	Review Trinity Parkway H&H models with NTTA and USACE
June 5, 2008	AC	NTTA coordination with City of Dallas, Oncor, and Dallas Lake Design Team related to utility relocations
June 6, 2008	AC	Mayor's Workshop Agency Coordination with NTTA, City of Dallas, FHWA, USACE, and TxDOT
June 24, 2008	IET	Trinity Interagency Executive Team Meeting
July 17, 2008	AC	Utility coordination with City of Dallas and Oncor
July 22, 2008	IET	Trinity Interagency Executive Team Meeting
July 22, 2008	AC	Project overview and coordination meeting with the Federal Emergency Management Agency (FEMA) Region VI
July 31, 2008	AC	Historic architectural resources coordination meeting and bus tour with the State Historic Preservation Officer (SHPO), Dallas County Historical Commission, and Preservation Dallas
August 26, 2008	IET	Trinity Interagency Executive Team Meeting
September 23, 2008	IET	Trinity Interagency Executive Team Meeting

NOTES:

* **Trinity River Executive Team** includes staff from the following organizations: City of Dallas Trinity River Corridor Project, NCTCOG, USACE (Fort Worth District and Dallas Division); TCEQ (Arlington Field Office), EPA (Region VI), TxDOT (Dallas District), and NTTA.

Acronym Legend

AC: Agency Coordination
IET: Interagency Executive Team
PH: Public Hearing
PM: Public Meeting
OP: Outside Presentation
CAWG: Community Advisory Work Group (Community Advisory Work Group consists of 54 representatives from neighborhood, businesses, civic groups, landowners, and environmental groups.) Meetings are open to the public.
BF: Briefing

APPENDIX G-8

SPEAKING EVENTS, PUBLIC DEBATES, AND MEDIA COVERAGE LEADING UP TO THE NOVEMBER 6, 2007 SPECIAL ELECTION

THIS PAGE INTENTIONALLY LEFT BLANK

APPENDIX G-8. Speaking Events, Public Debates, and Media Coverage Leading up to November 6, 2007 Special Election

On August 15, 2007, the City Secretary reported to the Dallas City Council that a petition submitted to the City of Dallas calling for prohibition of construction of certain roadways within the Trinity River levees from Westmoreland Road to IH-45 had been signed by the requisite number of qualified voters. City Council then ordered a special election to be held on the matter on November 6, 2007. The following is a list of speaking events and public debates that occurred leading up to the election in an effort to inform voters about the proposed project:

Date	Organization/Event	Location	Speaker
08/15/07	Stemmons Corridor Business Association	City Hall	Craig Holcomb
08/16/07	Senator Royce West and Commissioner Price Town Hall meeting	Carter High School	No speaker
08/16/07	Executive Directors of a group of chambers	North Dallas Chamber	Craig Holcomb
08/20/07	Dallas 40	Popolo's Café (Preston Royal Shopping Center)	Craig Holcomb
08/24/07	Oak Cliff Chamber		Craig Holcomb
08/27/07	Texas Council of Engineering Companies	City Place, 2711 N Haskell Avenue	Alan Walne and Rebecca Dugger, P.E., Director, Trinity River Corridor Project, City of Dallas
08/28/07	East Dallas Rotary Club		Craig Holcomb
09/06/07	The Real Estate Council (TREC) - PAC Executive Committee meeting	Marketing Center at Lincoln Center	Ron Kirk
09/08/07	Lake Highlands White Rock Democrats	DanceMasters, 10675 Northwest Hwy.	Ed Oakley and Veletta Lill
09/11/07	Greater Dallas Pachyderm Club	Eddie Deen's Ranch in downtown Dallas (944 South Lamar)	Donna Halstead
09/11/07	TREC	Nana Grill at the Anatole Hotel	Mayor Leppert
09/11/07	Young Democrats of America - Dallas chapter		David Hart and opposing speaker
09/12/07	North Texas GLBT Chamber	Hilton Dallas Park Cities, 5954 Luther Lane	Ed Oakley
09/13/07	Dallas Breakfast Group	Crescent Hotel (Crescent II room), 400 Crescent Ct.,	Ron Kirk and Councilmember Koop
09/15/07	Trinity River and Creek Area Clean Up Day	AMC Grand Theatre Parking Lot at Technology Blvd (Northwest Hwy and I-35) for volunteer check-in	Ed Oakley
09/17/07	Crow Holdings – Commercial Real Estate Women (CREW) golf tournament	Stonebriar Country Club	Gina Norris and Mandy Lemmond

Date	Organization/Event	Location	Speaker
09/18/07	Uptown Exchange Group	Popolo's Café	Lois Finkelman
09/19/07	Lake Highlands Republican Women's Club	9406 Winding Ridge Drive	Donna Halstead
09/20/07	Dallas Assembly	Arlington Hall 3333 Turtle Creek Blvd	Ron Kirk
09/20/07	West/Price Town Hall meeting	Townview	Willis Johnson and Mayor Leppert
09/21/07	Stemmons Corridor Business Association	Hilton Anatole (Grand Ballroom)	Mayor Leppert
09/22/07	Taste of Lake Highlands	Lake Highlands High School	Donna Halstead
09/24/07	"Eggs & Issues" (Brenda Reyes)	CityPlace	Brenda Reyes
09/24/07	Northwood Republican Woman's Club	Fretz Park Library, 6990 Belt Line Rd	
09/24/07	Hispanic Media Roundtable	Greater Dallas Hispanic Chamber of Commerce (GDHCC)	Mayor Leppert, Tom Lazo and Adelfo Callejo
09/24/07	GDHCC Board of Directors meeting	GDHCC	Brenda Reyes
09/25/07	Chamber Presidents publicly announcing support	Greater Dallas Chamber (GDC) 12th Floor Conference Center, 650 North Pearl Street (Plaza of Americas)	Chamber Presidents
09/25/07	League of Women Voters - Trinity Town Hall meeting	Rosemont Primary School, Chris V. Semos Campus, 1919 Stevens Forest Drive	Veletta Lill and Mayor Leppert
09/26/07	East Dallas Exchange Club	Lakewood Country Club, 6430 Gaston Ave.	Craig Holcomb
09/27/07	North Dallas Chamber - Business Leaders Briefing	North Dallas Chamber, 10707 Preston Road	Ron Kirk
09/27/07	North Texas Commercial Assn of Realtors (NTCAR) - Young Professionals Forum	Corgan Associates, Inc., 401 North Houston	Merry Wyatt and Alan Thomas
09/27/07	North Dallas Democratic Women's Club	Northaven United Methodist Church, 11211 Preston Rd.	Craig Holcomb
09/28/07	Dallas Chamber of Commerce - Public Advocacy Committee	GDC Conference Center, 12th Floor	Lee Jackson
10/01/07	Oak Cliff Chamber of Commerce Governmental Affairs Committee	Methodist Hospital Medical Center (Hitt Auditorium), 1441 N. Beckley Avenue	Mayor Leppert
10/01/07	Councilmember Jerry Allen's neighborhood meeting	Lake Highlands Freshman Center Auditorium, 10200 White Rock Trail	Councilmember Jerry Allen and Donna Halstead
10/2/07	Various Methodist Health System employee forums	Methodist Hospital	Kim Hollon
10/02/07	Dallas Trinity Rotary Club	Info Mart, 7th Floor/NW Conference Room (Stemmons Frwy. & Oak Lawn)	Alan Walne
10/02/07	Dallas Democratic Forum - Debate on the Trinity	Fairmont Hotel (1717 N Akard St), Pavilion Room	Mayor Leppert
10/02/07	Industrial business groups, sponsored by Stemmons Corridor Business Assn., Trinity Assn., and Mixmaster Business	Infomart (Hollerith Ballroom), 7th Floor Conference Center	Craig Holcomb and Ed Oakley

Date	Organization/Event	Location	Speaker
	Assn.		
10/02/07	Oak Lawn Committee	The Warwick Melrose Hotel, Oak Lawn at Cedar Springs Road	Bob Stimson
10/02/07	Dallas Junior Chamber of Commerce	Belo Mansion (downtown – corner of Pearl and Ross)	Dupree Scovell and Alan Thomas
10/03/07	Campaign Rally	Victory Park	
10/04/07	TREC - Membership Open House		
10/04/07	Various Methodist Health System employee forums	Methodist Hospital	Kim Hollon
10/04/07	North Dallas Neighborhood Alliance	Brentfield Primary School, 6767 Brentfield Drive	Councilmember Ron Natinsky and Linda Koop
10/06/07	Urban Trinity River Education Initiative/Town Hall Meeting	Paul Quinn College, 3837 Simpson Stuart Rd.	Craig Holcomb
10/06/07	Various Methodist Health System employee forums	Methodist Hospital	Kim Hollon
10/07/07	Temple Emanu-El Brotherhood	Temple Emanu-El (Tobian Auditorium), 8500 Hillcrest Road	Mayor Leppert and Bob Meckfessel
10/08/07	Bachman/Northwest Highway Community Association	Bachman Rec Center, 2750 Bachman Drive	Councilmember Koop
10/08/07	Dallas Republican Career Women	La Madeleine French Bakery, 3906 Lemmon Avenue	Donna Halstead
10/09/07	Northeast Chamber of Commerce		Councilmember Allen and Councilmember Kadane
10/09/07	South Dallas Pastors Coalition	Old Mill Inn restaurant in Fair Park	Mayor Leppert
10/09/07	Lakewood Neighborhood Association	Lakewood Elementary, 3000 Hillbrock	Gary Griffith
10/09/07	Peninsula Neighborhood Association	Bath House Cultural Center at White Rock Lake	Donna Halstead
10/09/07	Encore Homeowner's Association	Marriott Quorum, Addison	Councilmember Linda Koop
10/09/07	Gastonwood Coronado Homeowners Association (Hollywood/ Santa Monica Homeowners Association members to attend)	Lakewood Presbyterian Church, 7020 Gaston Ave.	Veletta Lill
10/09/07	East Kessler Park Neighborhood Association	Methodist Hospital	Warren Rutherford and Marcus Wood
10/11/07	Various Methodist Health System employee forums	Methodist Hospital	Kim Hollon
10/15/07	Dallas Public Affairs Luncheon Club	Park City Club, 5956 Sherry Lane, 17th Floor	Donna Halstead
10/15/07	Oak Cliff Chamber, Greater Dallas Hispanic Chamber, and Dallas Black Chamber Town Hall Meeting	Methodist Hospital	Ron Kirk, Michael Morris (NCTCOG), and Melissa Huffman
10/16/07	Park Cities Republican Women's Club	Meadows Museum, Southern Methodist University	Gina Norris
10/16/07	Stonewall Democrats		Ed Oakley
10/16/07	70 church organization headed by Reverend S.M. Wright	Trinity Center, 1444 Oak Lawn, Suite 200	Craig Holcomb
10/16/07	Prestonwood Homeowner's Association Annual Meeting	Prestonwood Elementary (RISD), 6525 La Cosa Drive	Councilmember Linda Koop

Date	Organization/Event	Location	Speaker
10/16/07	Little Forest Hills	White Rock United Methodist Church (1450 Oldgate @ Diceman)	Veletta Lill; Sam Coats
10/17/07	East Dallas MLS	Luby's (corner of Mockingbird and Abrams)	Craig Holcomb; Councilmember Angela Hunt
10/17/07	Lower Greenville area event/debate with neighborhood associations (NA): Belmont NA, Barking Dogs, Lower Greenville NA, Lowest Greenville West NA, Lakewood Heights NA, Wilshire Heights, Vickery Place NA	Vickery Towers, 5619 Belmont Ave.	Robert Meckfessel
10/17/07	Grassroots Citizens of Dallas - Trinity Referendum Debate	Knights of Columbus (Northwest Hwy and Audelia in Lake Highlands)	Alan Walne; Donna Blumer
10/18/07	TREC	Gilley's (on Lamar)	Mayor Leppert
10/18/07	Highland Springs Retirement	Highland Springs Retirement, 8000 Frankford Road	Councilmember Ron Natinsky
10/18/07	Dallas Bar Association - Trinity Toll Road Referendum Forum	Belo Mansion	Ron Kirk
10/18/07	White Rock Republican Women’s Club	Highland Park Cafeteria, Buckner and Garland	Donna Halstead
10/18/07	Bent Tree Country Club	Bent Tree Country Club, 5201 Westgrove Drive	Chancellor Lee Jackson and Councilmember Koop
10/18/07	Bryan Place Neighborhood Association	The Pool Clubhouse, 3030 Adolph St.	Warren Rutherford
10/18/07	Prestonwood Homeowner's Association		Councilmember Natinsky
10/19/07	Various Methodist Health System employee forums	Methodist Hospital	Kim Hollon
10/22/07	Veterans of Foreign Wars group	Belo Mansion	Bob Darrouzet and Mike Kutner
10/22/07	North Dallas Chamber of Commerce	Greek Orthodox Church, 13555 Hillcrest	Mayor Leppert; Councilmembers Koop and Natinsky and Michael Morris of NCTCOG
10/23/07	Lakeland Hills Crime Watch Organization	Church of the Nazarene (7979 East R.L. Thornton Fwy.)	Bob Stimson
10/23/07	Pena-West Homeowner's Association	Dallas Bible Church at Hillcrest and Arapaho	Councilmember Linda Koop
10/23/07	Swiss Avenue Historic District Association - Peak's Suburban, Junius Heights, Abrams Brookside and Munger Place in attendance	East Dallas Christian Church, 629 Peak Street	Veletta Forsythe Lill
10/24/07	Preston West Republican Women's Club	Weeburn Clubhouse 3749 Weeburn	Donna Halstead
10/25/07	North Texas AIOP	Dallas Country Club, 4110 Beverly Dr.	passed out materials
10/25/07	Edgemere Retirement Community Center	Edgemere Retirement Community Center, 8523	Donna Halstead and Norm Bagwell

Date	Organization/Event	Location	Speaker
		Thackery St.	
10/25/07	Jewish Community Relations Council	Jewish Community Center (Zale Auditorium), 7900 Northaven Rd.	Mayor Leppert and Chancellor Lee Jackson
10/27/07	Downtown Precinct 3204	1505 Elm (rec center)	Craig Holcomb; Sam Coats
10/29/07	Dallas Council of Engineering Companies	City Place on Haskell, Ground Floor	Craig Holcomb
10/29/07	Mountain Creek Trinity Referendum Public Forum with Councilmember Neumann (District 3)	Park in the Woods Rec Center - 6801 Mountain Creek Parkway	Mayor Leppert
10/30/07	East Dallas Rotary Club		Gary Griffith
10/30/07	Dallas Homeowner's League	Thurgood Marshall Recreation Center, 5150 Mark Trail Way	Bob Stimsonble
10/30/07	Methodist Health System employee forum	Methodist Hospital	Kim Hollon
11/01/07	Northeast Dallas Chamber - Economic Summit	City Place	Councilmember Jerry Allen and Craig Holcomb
11/01/07	International Women's Foundation Dallas and Dallas Assembly	Trinity River Foundation, Visitors Center	Donna Halstead
11/01/07	North Oak Cliff -1st Thursday Event	Bishop Arts District	No speaker needed
11/02/07	2nd Annual Southern Dallas County University of North Texas Dallas Campus and Southern Dallas County Economic Development Seminar/Conference	Hilton Garden Inn, 800 N. Main, Duncanville	Mayor Leppert
11/02/07	3rd annual Carpe Diem Trinity River fishing tournament		provided materials
11/02/07	REES Associates Architecture and Interior Design	1801 N. Lamar St., Suite 600 (conference room)	Mitch Paradise
11/02/07	NTCAR - Bus tour		provided materials

The following is a sample of articles that have been printed in the Dallas Morning News discussing various aspects of the Trinity Parkway project:

Dallas Morning News. *Environmentalists Criticize Trinity Road Plan*. July 10, 1999.

---------. *Trinity Plan Revs Up Traffic Debate*. August 15, 1999.

---------. *Too Close for Comfort? Corps Questions Proximity of Road, Parks in Trinity Plan*. February 27, 2000.

---------. *Groups Assail Trinity Floodplain Efforts*. March 3, 2000.

---------. *Levee Builders Overstated Trinity Flood Danger, Critics Say*. March 4, 2000.

---------. *Trinity Parkway Estimate Soars*. November 11, 2000.

---------. *Group Sues, says Trinity Plan 'Altered'*. December 8, 2000.

---------. *Trinity Lawsuit: City Shouldn't Be Faulted for Being More Specific*. December 15, 2000.

---------. *Trinity Obstacles: Environmental Studies Must Be Coordinated*. August 2, 2001.

---------. *Lawsuit Delays: Dallas Should Be Allowed to Begin Trinity Work*. August 28, 2001.

---------. *Trinity Project Reshaped: Nonprofit Private Foundation Replaces City-Sponsored Group*. October 18, 2001.

---------. *Although Goals Applauded, Trinity River Plan Questioned*. January 20, 2002.

---------. *Trinity Project Faces Hurdles*. March 6, 2002.

---------. *Council Considering Reverting to Slow, Free Trinity Road Plan*. May 14, 2002.

---------. *Trinity Corridor: Consultants are Clarifying the Plan*. October 5, 2002.

---------. *Set Sail With the Latest Trinity River Plan*. March 30, 2003.

---------. *Valuing City's Trinity Land*. April 16, 2003.

---------. *Dallas Bridge Model Unveiled*. June 4, 2003.

---------. *Council Members: Trinity Plan Short on Cash Facts*. June 24, 2003.

---------. *Officials: Work on Trinity River Project to Get Under Way Soon*. July 11, 2004.

---------. *Trinity Bridge Funds Tied Up in Congress*. October 24, 2004.

---------. *Visions for Trinity Discussed at Forum*. November 20, 2004.

---------. *Framing a Vision for Trinity*. February 19, 2005.

---------. *Seeing Red Over Loss of Green Space*. February 21, 2007.

---------. *Election Won't Weaken Trinity River Project's Support*. June 14, 2007.

---------. *Trinity Road Opponents Face Deadline*. June 29, 2007.

---------. *City Says toll Road Could Withstand Severe Flood*. June 30, 2007.

---------. *Trinity Toll Road Foes Say 80,000 Signed Petition*. June 30, 2007.

---------. *On Sold Ground: Trinity Toll Road Would Not Be Underwater Now*. July 5, 2007.

---------. *$219,000 Spend to Oppose Trinity Toll Road*. July 17, 2007.

---------. *Group Spends $163,000 to Save Trinity Toll Road*. July 17, 2007.

---------. *Many Trinity Petitioners Were Paid Professionals*. July 24, 2007.

---------. *Verdict on Trinity Toll Road Petition Expected Sunday*. July 27, 2007.

---------. *Hunt Not Backing Down in Trinity Toll Road Fight*. July 29, 2007.

---------. *Trinity Debate Just Keeps Us Voting and Voting and*. July 31, 2007.

---------. *Trinity Petitions Face Check*. July 31, 2007.

---------. *DA Says He Hasn't Seen Suspect Trinity Signatures*. August 1, 2007.

---------. *In '98 Bond Vote, Backers Referred to Trinity Toll Road*. August 11, 2007.

---------. *Dallas Council Talks Trinity Toll Road Today*. August 15, 2007.

---------. *Dallas Voters to Decide Fate of Trinity Toll Road*. August 15, 2007.

---------. *Trinity Proposition Campaigns Seem Unusually Quiet*. September 18, 2007.

---------. *Fight Over Trinity Toll Road Starts at the Drawing Board*. September 19, 2007.

---------. *Corps: Trees on Trinity Parkway OK if Flood Rules Met*. September 19, 2007.

Notes: In regard to the list of speaking events and public debates shown above, these events were organized by supporters and opponents of the special election petition and/or interested local organizations, and not by FHWA, TxDOT or NTTA. In regard to the listed news articles, FHWA, TxDOT, and the NTTA do not represent the information and opinions presented by the Dallas Morning News in the above listed articles as being true and correct, and do not warrant the authenticity or reliability of the information. That is the sole responsibility of the Dallas Morning News. However, the listing is a reflection of the public interest in the proposed project, and provides a sample of the amount of media coverage and information that has been available for public consumption in addition to the agency and public participation events identified in **Appendices A-2** and **G-7**.

THIS PAGE INTENTIONALLY LEFT BLANK

APPENDIX H

PRELIMINARY SECTION 404(b)(1) GUIDELINES EVALUATION

THIS PAGE INTENTIONALLY LEFT BLANK

TABLE OF CONTENTS

Appendix H - Preliminary Section 404(b)(1) Guidelines Analysis

1.0 INTRODUCTION H-1

2.0 PROJECT DESCRIPTION H-1
- 2.1 General Description H-1
- 2.2 Purpose and Need H-2
- 2.3 Description of Proposed Alternatives H-3
- 2.4 Description of the Fill Material H-3
- 2.5 Description of the Proposed Discharge Sites H-3

3.0 FACTUAL DETERMINATIONS H-4
- 3.1 Physical Substrate Determinations H-4
  - 3.1.1 Substrate Elevation and Slope H-4
  - 3.1.2 Placement of Dredged/Fill Material H-4
  - 3.1.3 Physical Effects on Benthos Invertebrates/Vertebrates H-4
- 3.2 Water Circulation, Fluctuation, and Salinity Determinations H-5
  - 3.2.1 Water Quality H-5
  - 3.2.2 Current Patterns and Circulation H-5
  - 3.2.3 Normal Water Level Fluctuations H-6
  - 3.2.4 Minimization Actions H-6
- 3.3 Suspended Particulate/Turbidity Determinations H-7
  - 3.3.1 Suspended Particulate/Turbidity at the Disposal Site H-7
  - 3.3.2 Chemical and Physical Properties of the Water Column H-7
  - 3.3.3 Water Quality and Contaminants H-7
  - 3.3.4 Minimization Actions H-7
- 3.4 Aquatic Ecosystem and Organism Determinations H-8
  - 3.4.1 Special Aquatic Sites H-8
  - 3.4.2 Threatened and Endangered Species H-9
  - 3.4.3 Other Wildlife H-9
  - 3.4.4 Minimization Actions H-9
- 3.5 Potential Effects on Human Use Characteristics H-10
  - 3.5.1 Municipal and Private Water Supplies H-10
  - 3.5.2 Recreational and Commercial Fisheries H-10
  - 3.5.3 Water-related Recreation H-11
  - 3.5.4 Parks, National and Historical Monuments, and Similar Preserves H-11
- 3.6 Determination of Cumulative Effects on the Aquatic Ecosystem H-11
- 3.7 Determination of Secondary Effects on the Aquatic Ecosystem H-12

4.0 FINDINGS OF COMPLIANCE H-12
- 4.1 Evaluation of Practicable Alternatives H-12
- 4.2 No Violations of Other Law H-13
- 4.3 No Significant Degradation of Waters of the U.S., Including Wetlands H-14
- 4.4 Appropriate Mitigation Has Been Identified H-14

5.0 CONCLUSIONS H-14

THIS PAGE INTENTIONALLY LEFT BLANK

APPENDIX H

PRELIMINARY SECTION 404(b)(1) GUIDELINES ANALYSIS

1.0 INTRODUCTION

This is a preliminary evaluation of the proposed alternatives for the Trinity Parkway project in light of the requirements of Section 404(b)(1) of the Clean Water Act (CWA) (33 U.S. Code § 1344(b)(1)), and implementing guidelines in 40 CFR Part 230 issued by the Environmental Protection Agency (EPA). Compliance with the Section 404(b)(1) guidelines is a basic requirement for receiving a permit under Section 404 from the U.S. Army Corps of Engineers (USACE) for the dredge or fill of waters of the U.S., including wetlands. The materials included in this analysis would be used in support of an application for a Section 404 permit, if a Build Alternative in the Dallas Floodway is selected as the project preferred alternative. This analysis has been prepared as part of the Trinity Parkway Supplemental Draft Environmental Impact Statement (SDEIS) for use in evaluating the proposed alternatives. This document frequently incorporates information from the SDEIS, by reference, when appropriate.

2.0 PROJECT DESCRIPTION

2.1 GENERAL DESCRIPTION

The North Texas Tollway Authority (NTTA) proposes to design, construct, operate, and maintain a limited-access toll facility from the IH-35E/SH-183 interchange to the US-175/SH-310 interchange, a distance of approximately 9 miles, in the City of Dallas. The proposed action is known as the Trinity Parkway and would provide a needed reliever route around the existing freeway loop, which encircles downtown Dallas, Texas.

The proposed facility would consist of six mixed-flow main lanes, local street interchanges, and freeway-to-freeway interchanges at the north terminus, south terminus, Woodall Rodgers Freeway, and Interstate Highway (IH) 45. Additional interchange connections are included, but vary among the Build Alternatives considered in the SDEIS. Toll collection facilities would comprise main lane gantries, ramp gantries, and ancillary facilities. The proposed tollway would be constructed in stages, with fewer lanes initially than the ultimate facility. Additional capacity would be added as traffic demand and conditions warrant. Actual construction of the project may also be accomplished in sections, meaning that specific roadway segments may be completed and opened to traffic before the completion and opening of the entire length of the facility. Funding for the proposed project is anticipated to be provided by local, state, and federal sources, and through the collection of tolls.

The study area roadways include IH-30, IH-35E, and IH-45, US Highway 175, State Highways (SH) 183 and 310, and numerous local arterial streets. Notable features include the IH-35E/IH-30 interchange on the west edge of downtown Dallas, locally known as the "Mixmaster," the depressed segment of IH-30 south of the downtown, locally known as the "Canyon," and the segment of IH-35E from the IH-35E/IH-30 interchange north to the Dallas North Tollway (DNT), locally known as the "Lower Stemmons" corridor. These roadways currently experience congestion and safety problems due to geometric deficiencies, limited capacity, and increasing traffic volumes. These roadways are anticipated to operate at worsening congestion levels in the future. Please reference **Section 1.1** of the SDEIS for a more thorough description and project location maps.

2.2 NEED AND PURPOSE

Population and employment growth within the Dallas-Fort Worth (DFW) metropolitan area during the last several decades, combined with other traffic generating factors, has led to unacceptable levels of congestion on IH-35E and IH-30 in the vicinity of the Dallas Central Business District (CBD). The effects of this congestion – increased traffic accidents and rising costs due to travel delays – suggest the need to take action. Other transportation problems in the study area stem from a poorly developed roadway network that is constrained in its ability to meet the mobility and access needs of the study area's population, local commuters, through traffic, and major employment and public facilities. Regional population and employment growth projections, public and private development initiatives, local land use plans and policies, and an anticipated increase in trade-related trucking activity indicate that study area congestion problems would continue to worsen unless action is taken.

Efforts to improve traffic flow and safety on IH-35E, IH-30, and other major roadways in the study area are already taking place, such as traffic signal and intersection improvements, high-occupancy vehicle facilities, transportation system management/travel demand management strategies, intelligent transportation systems, public transportation (bus and rail transit), and bicycle/pedestrian improvements. Other improvements to the transportation system are planned for the future, including major upgrades to the Canyon/Mixmaster/Lower Stemmons corridors (i.e., Project Pegasus). Long-range plans also call for substantial new investments in transit infrastructure along with programs and policies to curb travel demand, encourage more transport-efficient land use patterns, and generally provide for more alternatives to single-occupant vehicle travel. However, long-range traffic forecasts have shown that even with these improvements, programs, and policies there would remain a high level of congestion on IH-35E, IH-30, and other major transportation facilities in the study area.

The primary purpose of the Trinity Parkway is to manage traffic congestion on IH-35E, IH-30, and other major transportation facilities within the Trinity Parkway study area in order to improve mobility, safety, and increase accessibility to businesses and public facilities.

2.3 DESCRIPTION OF PROPOSED ALTERNATIVES

Chapter 2 of the SDEIS provides a complete description of each alternative under consideration, including estimated right-of-way and construction costs. The Trinity Parkway alternatives are identified as:

- Alternative 1 – No-Build
- Alternative 2A – Irving/Industrial Boulevard - Elevated
- Alternative 2B – Irving/Industrial Boulevard - At-Grade
- Alternative 3A – Combined Parkway - Riverside (Original)
- Alternative 3B – Combined Parkway - Riverside (Modified)
- Alternative 3C – Combined Parkway - Riverside (Further Modified)
- Alternative 4A – Split Parkway – Riverside (Original)
- Alternative 4B – Split Parkway – Riverside (Modified)
- Alternative 5 – Split Parkway - Landside

2.4 DESCRIPTION OF THE FILL MATERIAL

As noted in **Section 3.5.3.3** of the SDEIS, sediments contained within the impacted waters of the U.S., including wetlands, were predominantly floodplain clays common to the Trinity River Basin. The potential fill proposed to be placed within the waters of the U.S., including wetlands, would consist of a mixture of topsoil and overburden material along the Trinity River overbank areas, excavated from similar soil types on-site for the construction of the roadway embankments.

2.5 DESCRIPTION OF THE PROPOSED DISCHARGE SITES

A jurisdictional determination of waters of the U.S., including wetlands, was prepared and submitted to the USACE for verification. For the most part, waters of the U.S., including wetlands, are contained between the levees of the Dallas Floodway. Classification types included perennial and intermittent streams, open water, emergent wetlands, and forested wetlands. Also included within the study area were historical meanders of the Trinity River channel. **Section 3.4.6** of the SDEIS provides a detailed description of the specific waters of the U.S., including wetlands, types in the study area.

3.0 FACTUAL DETERMINATIONS

3.1 PHYSICAL SUBSTRATE DETERMINATIONS

3.1.1 Substrate Elevation and Slope

No impacts to topography, geology, and soils would occur in the study area under the No-Build Alternative. All of the Build Alternatives would involve some degree of change to surface topography to waters of the U.S., including wetlands, due to cut and fill slopes, embankment material, excavation, ditching, and/or trenching. Alternatives 2A and 2B would have the least impacts to surface topography. Alternatives 3A, 3B, 3C, 4A, 4B, and 5 would have the most impacts because construction of either of these alternatives may involve substantial modifications to the Dallas Floodway (e.g., construction of roadway embankments and borrow excavation).

3.1.2 Placement of Dredged/Fill Material

The vast majority of soil material removed from the floodplain, including waters of the U.S., including wetlands, would be excavated by mechanical excavators and loaded into trucks to be hauled to the road embankment construction area. Approximate distance of movement would vary between construction staging areas. The excavated material may be moved in almost any direction from the initial point of excavation. However, the strategic location of construction haul roads would serve to minimize these distances for operational efficiency and to avoid the disturbance or compaction of soil in non-target waters of the U.S., including wetlands, where possible.

Fill or excavation activities associated with any of the proposed Build Alternatives would for the most part be placed in aquatic resources that would be eliminated during the construction process. Potential impacts from the dispersion of fill material should be minimal as aquatic resources impacted by construction activities are primarily associated with intermittent wetlands which may be dry for portions of the year. The proper implementation and maintenance of best management practices (BMPs) during construction should further reduce the risk for dispersion of earthen material in the excavation areas adjacent to the Trinity River channel.

3.1.3 Physical Effects on Benthos Invertebrates/Vertebrates

Immediate impacts to the benthic community would be experienced as the fill within wetlands and other aquatic habitats would effectively bury the existing benthic communities. Additionally, construction activities could cause localized increases in suspended sediments to non-target areas resulting in the

eventual burying of the associated benthic communities. Benthic communities would be permanently impacted in areas of new fill. Over time, it is expected the benthic communities would eventually be reestablished in slightly disturbed areas, as well as the compensatory mitigation areas, thereby resulting in only short-term localized impacts.

3.2 WATER CIRCULATION, FLUCTUATION, AND SALINITY DETERMINATIONS

This section discusses the effect the proposed discharges would have individually and cumulatively on water quality, water circulation, including downstream flows, and normal water fluctuation. EPA Guideline 40 CFR Section 230.11(b) specifies salinity as a component of this determination. However, given the geographic location of the proposed project, effects on salinity were not included in this analysis.

3.2.1 Water Quality

Existing water quality data suggest that surface water quality has already been compromised by wastewater effluent and local urban runoff, including stormwater runoff from existing roadways in the study area and beyond. Concentrations of several pollutants in water and sediment within the Trinity River, including the segment of the river within the study area, exceed water quality and aquatic wildlife objectives established by the Texas Commission on Environmental Quality (TCEQ) and Texas Department of State Health Services (TDSHS). Furthermore, existing concentrations of contaminants (i.e., nitrite plus nitrate, phosphorus, orthophosphorus, fecal coliform bacteria, zinc, chlordane, PCBs, etc.) may be adversely affecting the local aquatic environment.

Each of the Build Alternatives would require fill in various locations which could include portions of the Dallas Floodway and waters of the U.S., including wetlands in the study area. Alternatives 3A, 3B, 3C, 4A, and 4B require fill in the Dallas Floodway while the other alternatives (Alternatives 2A, 2B, and 5) do not. Increased pavement area and average daily traffic (ADT) over the life of the proposed action have the potential to discharge stormwater pollutants to these water bodies and wetlands in concentrations that could negatively affect aquatic life. **Section 4.12.3** of the SDEIS contains a detailed discussion of potential water quality impacts associated with each of the Build Alternatives.

3.2.2 Current Patterns and Circulation

No change in water circulation or fluctuation would occur in the study area under the No-Build Alternative. Flow patterns associated with the various aquatic habitat types would be altered as a result of the Build Alternatives. Most notably would be the higher flows of the Trinity River and the linear drainage sumps that drain into the floodway. The borrow areas for the road embankment would excavate portions of the

floodway to an elevation above the base flow elevation of the Trinity River and the linear drainage sumps. Low flows would continue downstream in a fashion similar to existing conditions, but higher flows would be temporarily ponded in the large borrow areas that would be connected to the Trinity River channel. The portions of the road embankments that cross the linear drainage sumps would be bridged or placed in culverts so as to maintain the existing flow characteristics and to avoid interfering with the functioning of the actual sump structure.

Various waters of the U.S., including wetlands, within the floodway may be affected as a result of project construction. Many of the aquatic features within the floodway are large linear complexes that may extend parallel or perpendicular to the Trinity River. Although the excavation would result in the direct loss of the entirety of many of these features, there would be remnant portions of these features that would extend beyond the limits of the excavation. As such, final grading could result in remnant aquatic features that are gradually drained or unable to be hydrologically recharged by local surface runoff.

Several of these linear wetlands convey local surface runoff to the interior linear sumps. Some of these linear drainages would be filled as a result of the roadway embankment. These drainages would need to be reestablished at the toe of the embankment to reestablish existing drainage patterns and prevent excessive ponding within the floodway.

The Build Alternatives outside the floodway would not affect any existing water circulation patterns.

3.2.3 Normal Water Level Fluctuations

Effects to downstream receiving aquatic resources are expected to be limited. As described above in **Section 3.2.2**, there would be no diversion of the actual Trinity River channel which would substantially alter downstream flows. Although there may be some minor effect on overbank flooding frequency from the short-term storage effect of the borrow areas, floodplain areas within the study area and downstream of the study area would still be expected to experience overbank flood events consistent with current frequencies.

3.2.4 Minimization Actions

The overall mitigation structure for water quality impacts is a condition of the National Pollutant Discharge Elimination System (NPDES)/Texas Pollutant Discharge Elimination System (TPDES) requirements as well as other local, state, and federal stormwater runoff control and management programs. Implementation details for these mitigation measures would be developed and incorporated into project design and operations prior to project start-up. With proper implementation and monitoring of appropriate

mitigation measures, short-term (construction-related) and long-term (operation-related) water quality impacts would be avoided or minimized. Detailed information concerning measures to minimize water quality impacts is provided in **Section 7.2** of the SDEIS.

3.3 SUSPENDED PARTICULATE/TURBIDITY DETERMINATIONS

3.3.1 Suspended Particulate/Turbidity at the Disposal Site

Erosion and sedimentation are short-term issues associated with all of the Build Alternatives. The potential for erosion and sedimentation is accelerated when vegetation is cleared in preparation for the construction of the roadway. As each of the Build Alternatives requires the crossing of several water bodies within the study area, including the Trinity River and its network of drainage sumps and tributaries, the potential exists for an increase in suspended solids and turbidity. In addition, bridge construction has the potential to create soil erosion, which likewise could increase suspended particulates and turbidity both in the study area and downstream of the study area.

3.3.2 Chemical and Physical Properties of the Water Column

Although the potential exists for incidental suspension of particulates from erosion, most of the fill and excavation activities are associated with intermittent wetlands. As such, any increase in suspended particulates and turbidity would be temporary in nature and suspended particulates would be expected to shortly settle. Furthermore, any subsequent adverse effects on biological factors such as light penetration or dissolved oxygen would also be minimal.

3.3.3 Water Quality and Contaminants

The material proposed for fill into waters of the U.S., including wetlands, would not introduce, relocate, or increase contaminants in the material itself or in the aquatic environment in the proposed placement locations for any of the Build Alternatives.

3.3.4 Minimization Actions

During and immediately following construction, there would be exposed soils. Soils within the Build Alternative rights-of-way, in general, are classified as having slight to moderate potential for erosion. Although erosion is expected to be limited to the immediate vicinity of the proposed roadway, new embankment slopes, and at interchanges and overpasses, the potential for soil erosion would occur during the construction period. The amount of disturbed earth would be limited so that potential for

excessive erosion is minimized and sedimentation outside of the right-of-way is avoided. Existing vegetation would be preserved wherever possible. Temporary erosion and sedimentation control measures such as silt fences, rock berms, sedimentation basins, and/or soil retention blankets would be implemented as needed prior to the initiation of construction. Permanent soil erosion control features would be constructed as soon as feasible during the early stage of the contract through proper sod placement and/or seeding techniques. Disturbed areas would be restored and stabilized as soon as the construction schedule permits, and temporary sod would be considered where large areas of disturbed ground would be left bare for a considerable length of time. Effective implementation of stormwater BMPs would further minimize any short-term localized increases in suspended particulates and turbidity both during and following construction.

3.4 AQUATIC ECOSYSTEM AND ORGANISM DETERMINATIONS

This section examines whether the proposed discharges to aquatic resources for either of the alternatives would contribute to substantial degradation of waters of the U.S., including wetlands, through adverse impacts to life stages of aquatic life and other wildlife, and impacts on diversity, productivity, and stability of aquatic life and other wildlife or wildlife habitat. The No-Build Alternative would result in no modifications to the aquatic ecosystem other than what would develop from existing urban-related activities. All of the Build Alternatives would involve some degree of impact to the aquatic ecosystem due to cut and fill slopes, embankment material, excavation, ditching, and/or trenching.

3.4.1 Special Aquatic Sites

This subsection examines the potential impacts of the Build Alternatives on a variety of areas that possess special ecological characteristics of productivity, habitat, wildlife protection, or other important and easily disrupted ecological values. Several types of special aquatic sites that are described in the Section 404(b)(1) Guidelines are not discussed herein because they do not occur within the study area (i.e., wildlife sanctuaries and refuges; mudflats, vegetated shallows; coral reefs; and riffle and pool complexes). Specifically, this subsection addresses the potential impacts to wetlands in the project vicinity.

The proposed Build Alternatives would involve the removal of wetlands that are considered waters of the U.S. Alternatives 2A and 2B would have less of an adverse impact on wetlands than the riverside alternatives (Alternatives 3A, 3B, 3C, 4A, 4B, and 5) as discussed in detail in **Section 4.8.2** of the SDEIS. All wetlands would be mitigated in accordance with the Trinity Parkway Preliminary Section 404 Mitigation Plan in **Appendix J** of the SDEIS. Wetlands would be replaced at an approximate acreage ratio of 1:1 and would be designed to mimic existing wetlands within the floodway.

3.4.2 Threatened and Endangered Species

Potential effects of the project have been analyzed relative to federally listed threatened and endangered species with potential for occurrence in the vicinity of the project (see **Section 3.4.5, SDEIS**). Most of the federally listed species in this section of the SDEIS are considered as rare migrants in the project vicinity or there occurrence would be incidental in nature. No effect to federally listed threatened or endangered species is anticipated for any of the Build Alternatives.

3.4.3 Other Wildlife

Urban landscaped areas and floodplain grasslands account for the majority of the aerial coverage of the vegetated portions of the Build Alternatives. However, the greatest impact to wildlife would result from the permanent adverse impacts to riparian forest and wetland habitats. The removal of riparian forests and wetland areas associated with the construction of the Build Alternatives would result in the reduction of available habitat for wildlife historically using these areas. These impacts are discussed in detail in **Section 4.9.2** of the SDEIS.

3.4.4 Minimization Actions

The goals of mitigation are to avoid and minimize adversely affecting sensitive natural resources and to compensate for losses of these resources if impacts are unavoidable. Implementation of BMPs would serve to minimize impacts to wetlands and other waters of the U.S. within the study area. Specific measures to reduce erosion and maintain water quality would be identified and include the following:

- Incremental grading and native grass seeding to reduce soil loss during construction;
- Temporary exclusion fencing of avoided wetlands during construction;
- Stabilization practices such as rounding of ditches and slopes, erosion control blankets, reseeding with native species, and mulching impacted areas to reduce erosion;
- Installation of structural BMPs such as silt fences and erosion blankets in impacted areas to reduce off-site siltation;
- Development of an emergency spill response program and the implementation of spill-prevention practices such as locating staging areas and fuel and hazardous construction material storage sites well away from waters of the U.S., including wetlands, to reduce risks from accidental spillage and leaching;
- Disposal of surplus fill in non-wetland areas;

- Timing construction in and around open water to occur in late fall and winter when water levels are low, soil compaction is minimal, and vegetation is dormant; and
- Sparing existing trees in impacted wetlands when possible and fencing around trees and shrubs to prevent damage.

Unavoidable impacts to waters of the U.S., including wetlands, and to sensitive habitats are mitigated by restoration or replacement. The successful implementation of a compensatory mitigation plan should ensure that no net loss of waters of the U.S., including wetlands, and no cumulative loss of sensitive habitat result from the proposed action. As noted above in **Section 3.4.1**, all wetlands would be mitigated in accordance with the Trinity Parkway Preliminary Section 404 Mitigation Plan in **Appendix J** of the SDEIS.

3.5 POTENTIAL EFFECTS ON HUMAN USE CHARACTERISTICS

3.5.1 Municipal and Private Water Supplies

Discharges of fill material into waters of the U.S., including wetlands, associated with the Build Alternatives would not affect any public water supply, water treatment facilities, or water distribution systems; however, rainfall runoff rates would increase slightly due to the increase in impervious cover. This increased runoff could have adverse impacts over the long term if the possibility of overland flow is not available and proper control measures are not implemented. To minimize the possibility of contamination of surface water due to pollutant runoff, proper control measures would be implemented during construction and operation of the proposed action.

3.5.2 Recreational and Commercial Fisheries

As discussed in **Section 3.5.5** of the SDEIS, bacteria levels in the Trinity River have exceeded the criterion established to assure the safety of contact recreation. An aquatic life closure was issued by the Texas Department of Health, predecessor to the TDSHS, in 1990 due to the presence of elevated levels of the organochlorine insecticide “chlordane” in fish tissue. This means fishing is allowed, but not the taking of fish for human consumption. Given the existing restrictions on fishing in the Trinity River, together with the fact that most discharges into waters of the U.S., including wetlands, will occur in intermittent wetlands, none of the proposed Build Alternatives should have an effect on recreational or commercial fisheries.

3.5.3 Water-related Recreation

As described above in **Section 3.5.2**, bacteria levels have exceeded the criterion established to assure the safety of contact recreation. Therefore, potential water-related recreation impacts would be limited to non-contact recreation activities. One of the goals of the Trinity Parkway project as a whole is to improve access to existing and future proposed recreational opportunities, including water-related recreation. As such, none of the proposed Build Alternatives should have an adverse effect on water-related recreation.

3.5.4 Parks, National and Historical Monuments, and Similar Preserves

The City of Dallas PARD has indicated that none of the Trinity Parkway Build Alternatives would have a negative impact to any of the existing/planned parks and recreational areas located in the study area. It should be noted that all of the parks in the project vicinity exist in an urban environment where the influences of the local transportation system are part of their operational and functional characteristics. All are located adjacent to or crossed by operating roadways, so the passage of vehicles nearby would not introduce an activity that has not previously existed. As such, none of the proposed Build Alternatives should have an adverse effect on parks, national and historical monuments, research sites, and similar preserves. **Section 4.7.3** of the SDEIS describes in detail the effects of the proposed project on parks and recreational areas.

3.6 DETERMINATION OF CUMULATIVE EFFECTS ON THE AQUATIC ECOSYSTEM

Past development in the study area has resulted in loss of natural habitats through residential, commercial, and industrial development, habitat fragmentation from infrastructure construction or changes in land use, and disruption of fish and wildlife populations. Based on past experience, future development in the DFW region, whether it is transportation improvements or commercial/residential development, could be expected to have cumulative effects upon the region's remaining natural resources (i.e., wetlands, water resources, and biological resources).

Impacts to biological resources would be avoided or minimized assuming compliance with existing federal statutes, which apply to private as well as public developments. The USACE, under the CWA, and the U.S. Fish and Wildlife Service (USFWS), under the Endangered Species Act (ESA), have legislative mandates to reduce or avoid substantial adverse impacts to protected resources on an individual as well as cumulative project basis. Assuming compliance with these mandates, no substantial adverse effects on protected biological resources would result as a cumulative consequence of continuing historic development patterns. Please see **Section 4.24.2** of the SDEIS for a detailed assessment of cumulative impacts to aquatic resources.

3.7 DETERMINATION OF SECONDARY EFFECTS ON THE AQUATIC ECOSYSTEM

Secondary or indirect impacts are defined as those "caused by an action and are later in time or farther removed in distance but are still reasonably foreseeable." This kind of impact is typically considered to be an effect indirectly caused or induced by construction of the proposed action. For the proposed Build Alternatives, potential secondary impacts to the aquatic ecosystem include:

- Increased runoff due to changes in land use and increased development on land surrounding the proposed facility;
- Increased sedimentation of aquatic resources, including wetlands, and decreased water quality due to future development of land adjacent to the new facility; and
- Loss of wildlife habitat and decreased habitat function in areas of increased land development.

Secondary impacts to aquatic resources could result from the operation and maintenance of the Trinity Parkway and from secondary land development. As a direct effect of the project, vegetation communities would be impacted on a landscape scale by fragmentation (in areas where no roadways currently exist) and loss of habitat continuity. These types of impacts may affect the processes and functions of communities including seed dispersal, reproductive activities, and the cycling and transfer of nutrients. Additional losses of vegetation would also be incurred if secondary land development takes place.

4.0 FINDINGS OF COMPLIANCE

This section summarizes the comparison of anticipated impacts from the proposed Trinity Parkway project, as mitigated by the proposed compensatory mitigation plan, provided in **Appendix J** of the SDEIS, with the specific regulatory criteria on restriction of discharge as listed in 40 CFR 230.10 and excerpted below.

4.1 EVALUATION OF PRACTICABLE ALTERNATIVES

> *"Except as provided under Section 404(b)(2), no discharge of dredged or fill material shall be permitted if there is a practicable alternative to the proposed discharge which would have less adverse impact on the aquatic ecosystem, so long as the alternative does not have other significant adverse environmental consequences." (40 CFR § 230.10(a))*

This evaluation is based on a preliminary design of the project alternatives and identifies environmental impacts associated with the proposed action insofar as present design data allows. Some of the specific information may not be as accurate as final design plans may facilitate. This draft Section 404(b)(1) evaluation details eight separate Build Alternatives. When a single preferred alternative is identified, this evaluation will be revised and a final Section 404(b)(1) evaluation in defense of the preferred alternative will be prepared.

4.2 NO VIOLATIONS OF OTHER LAW

"No discharge of dredged or fill material shall be permitted if it:

(1) Causes or contributes, after consideration of disposal site dilution and dispersion, to violations of any applicable state water quality standard;

(2) Violates any applicable toxic effluent standard or prohibition under Section 307 of the Clean Water Act;

(3) Jeopardizes the continued existence of species listed as endangered or threatened under the Endangered Species Act of 1973, as amended, or results in the likelihood of destruction or adverse modification of a habitat which is determined by the Secretary of the Interior or Commerce, as appropriate, to be a critical habitat under the Endangered Species Act of 1973, as amended; or

(4) Violates any requirement imposed by the Secretary of Commerce to protect any marine estuary designated under Title III of the Marine Protection, Research, and Sanctuaries Act of 1972." (40 CFR § 230.10(b))

In all cases, the review of proposed plans and possible impacts associated with implementation of the selected Build Alternative may require the coordinating agencies to request modification of the final design, implement mitigation measures, or meet other specific conditions before compliance is achieved. As long as acceptable design is followed and suitable BMPs are implemented and maintained, compliance with state water quality standards is expected.

None of the proposed alternatives would discharge toxic pollutants into waters of the U.S., including wetlands. Therefore, there would not be a violation of Section 307 of the CWA.

No effects to federally listed threatened or endangered species are anticipated for any of the Build Alternatives. Given the location of the proposed project, none of the Build Alternatives would violate any requirements imposed to protect designated marine sanctuaries.

4.3 NO SIGNIFICANT DEGRADATION OF WATERS OF THE U.S., INCLUDING WETLANDS

> *"Except as provided under Section 404(b)(2), no discharge of dredged or fill material shall be permitted which will cause or contribute to the degradation of waters of the U.S." (40 CFR § 230.10(c))*

With the implementation measures identified as part of the potential Build Alternatives, as described in **Section 7.2** of the SDEIS, the proposed action would not cause or contribute to the degradation of waters of the U.S., including wetlands. The proposed project would not discharge pollutants resulting in a substantial adverse effect on: 1) human health or welfare; 2) life stages of aquatic life or other wildlife dependent on aquatic ecosystems; 3) aquatic ecosystem diversity, productivity, and stability; or 4) recreational, aesthetic, or economic values.

4.4 APPROPRIATE MITIGATION HAS BEEN IDENTIFIED

> *"Except as provided under Section 404(b)(2), no discharge of dredged or fill material shall be permitted unless appropriate and practicable steps have been taken which will minimize potential adverse impacts on the discharge on the aquatic system." (40 CFR § 230.10(d))*

The measures taken to minimize the adverse impacts to aquatic ecosystems from discharges of fill material have been described in this evaluation and are further described in the **Section 7.4** of the SDEIS and in the compensatory mitigation plan that is provided in the SDEIS as **Appendix J**. The proposed compensatory mitigation actions include the creation of new wetlands adjacent to the Trinity River channel within the study area.

5.0 CONCLUSIONS

The proposed project is currently evaluating eight Build Alternatives. The actions leading up to the development of the alternatives are detailed in the SDEIS. A preferred alternative would be identified after the issuance of the SDEIS and input is received from the public and coordinating agencies.

The project will not violate state water quality standards or Section 307 of the CWA. The proposed project will not violate the Endangered Species Act of 1973 nor violate any requirements imposed to protect designated marine sanctuaries under Title III of the Marine Protection, Research, and Sanctuaries Act of 1972.

No discharge of dredged or fill material would cause substantial degradation of waters of the U.S., including wetlands. This evaluation, including the SDEIS, details all appropriate steps that have been or would be taken to avoid and minimize impacts to waters of the U.S., including wetlands, and to compensate for all unavoidable impacts to waters of the U.S., including wetlands, that would result from the proposed project.

In summation, the proposed disposal sites for the direct discharge of dredged or fill material are specified as complying with the requirements of the Section 404(b)(1) Guidelines, with the implementation of appropriate and practicable measures to minimize pollution or adverse effects on the aquatic system.

THIS PAGE INTENTIONALLY LEFT BLANK

APPENDIX I

TCEQ SECTION 401 WATER QUALITY CERTIFICATION QUESTIONNAIRE

THIS PAGE INTENTIONALLY LEFT BLANK

APPENDIX I

TCEQ SECTION 401 WATER QUALITY CERTIFICATION QUESTIONNAIRE

I. Impacts to Surface Water in the State, Including Wetlands

A. What is the area of surface water in the State, including wetlands, that will be disturbed, altered or destroyed by the proposed activity?

This assessment is based on a preliminary design of the project alternatives and identifies environmental impacts associated with the proposed action insofar as present design data allows. Some of the specific information may not be as accurate as final design plans may facilitate. This draft Section 401 Water Quality Certification assessment considers eight separate Build Alternatives. When a single preferred alternative is identified, this evaluation would be revised and a final Section 404(b)(1) evaluation in defense of the preferred alternative will be prepared. **Table I-1** presents a summary of the different types of waters that would be impacted by each alternative.

TABLE I-1. IMPACTED WATERS OF THE U.S., INCLUDING WETLANDS

Build Alternative	Emergent Wetlands		Forested Wetlands		Open Water - Intermittent*		Historic Trinity River Channel		Intermittent Stream		Trinity River*		Total	
	Fill	Ex.	Fill	Ex.	Fill	Ex.	Fill	Ex.	Fill	Ex.	Fill	Ex.	Fill	Ex.
2A	--	--	1.38	--	--	--	2.72	--	0.13	--	--	--	4.23	--
2B	--	--	2.53	--	--	--	6.34	--	0.20	--	--	--	9.07	--
3A	12.64	20.63	1.74	--	3.84	2.53	0.27	--	0.20	--	0.27	40.35	18.96	63.51
3B	11.73	20.63	1.27	--	3.47	2.53	0.84	--	0.23	--	0.18	40.35	17.72	63.51
3C	17.01	20.63	1.28	--	4.45	2.53	1.51	--	0.15	--	2.98	40.35	27.38	63.51
4A	14.90	20.63	1.74	--	2.98	2.53	0.42	--	0.20	--	1.98	40.35	22.22	63.51
4B	35.77	20.63	1.28	--	5.79	2.53	1.21	--	0.10	--	2.98	40.35	47.13	63.51
5	2.02	--	--	--	0.09	--	8.23	--	0.13	--	1.32	--	11.79	--

Notes: The information for Alternatives 3A, 3B, and 4A is shaded to denote for the reader that these alternatives are not considered feasible by the USACE due to concerns detailed in **Volume I, Chapter 2, Section 2.3.9**.

1. All quantities shown in acres. Calculated areas are estimates only. "**Fill**" impacts are expected from roadway construction; excavation ("**Ex**.") impacts are expected from potential borrow areas (see **Plate 4-26** for borrow area locations).
2. Expected impacts are based on the jurisdictional determination approved by USACE on June 19, 2006 (File # SWF-2000-00308).
3. **--** = No impact anticipated for this alternative.

* Potential impacts to waters of the U.S., including wetlands, may occur from bridge column construction and can be addressed or eliminated during final design.

Is compensatory mitigation proposed? If yes, submit a copy of the mitigation plan. If no, explain why not.

Yes. See **Appendix J** of the Trinity Parkway Supplemental Draft Environmental Impact Statement.

B. Please complete the attached Alternatives Analysis Checklist.

See page 5 of this document.

II. Disposal of Waste Materials

A. Describe the methods for disposing of materials recovered from the removal or destruction of existing structures.

The project alternatives will involve displacements of residential, commercial/industrial, and or public facilities, thereby requiring the removal and destruction of existing structures. Prior to any renovation or demolition, an asbestos inspector licensed by the Texas Department of State Health Services (TDSHS) would perform a comprehensive asbestos survey of the area(s) to be renovated or demolished to verify the asbestos content of potentially disturbed materials. At that time, proper asbestos abatement procedures developed by a licensed asbestos consultant would be followed for all identified asbestos containing materials.

All materials from the demolition and abatement activities will be removed from the site for disposal/recycling at facilities licensed and permitted to accept the material.

B. Describe the methods for disposing of sewage generated during construction. If the proposed work establishes a business or a subdivision, describe the method for disposing of sewage after completing the project.

The proposed project would not generate sewage before, during, or after construction. Sewage generated by construction workers will be collected in portable units and disposed of at an off-site treatment facility with no impact on water quality in the project area.

C. *For marinas, describe plans for collecting and disposing of sewage from marine sanitation devices. Also, discuss provisions for the disposing of sewage generated from day-to-day activities.*

Not Applicable

III. Water Quality Impacts

A. Describe the methods to minimize the short-term and long-term turbidity and suspended solids in the waters being dredged and/or filled. Also, describe the type of sediment (sand, clay, etc.) that will be dredged or used for fill.

During and immediately following construction, there would be exposed soils. Soils within the Build alternative rights-of-way, in general, are classified as having slight to moderate potential for erosion. Although erosion is expected to be limited to the immediate vicinity of the proposed roadway, new embankment slopes, and at interchanges and overpasses, the potential for soil erosion would occur during the construction period. The amount of disturbed earth would be limited so that potential for excessive erosion is minimized and sedimentation outside of the right-of-way is avoided. Existing vegetation would be preserved wherever possible. Temporary erosion and sedimentation control measures such as silt fences, rock berms, sedimentation basins, and/or soil retention blankets would be implemented as needed prior to the initiation of construction. Permanent soil erosion control features would be constructed as soon as feasible during the early stage of the contract through proper sod placement and/or seeding techniques. Disturbed areas would be restored and stabilized as soon as the construction schedule permits, and temporary sod would be considered where large areas of disturbed ground would be left bare for a considerable length of time. Implementation of stormwater BMPs should further minimize any short-term localized increases in suspended particulates and turbidity both during and following construction.

B. Describe measures that will be used to stabilize disturbed soil areas, including: dredge material mounds, new levees or berms, building sites, and construction work areas. The description should address both short-term (construction related) and long-term (normal operation or maintenance) measures. Typical measures might include containment structures, drainage modifications, sediment fences, or vegetative cover. Special construction techniques intended to minimize soil or sediment disruption should also be described.

The applicant proposes to implement BMPs during project construction to eliminate and/or mitigate against the pollution of stormwater into adjacent waters from construction activities. A number of BMPs for erosion and sedimentation control would be implemented for the project including, but not limited to:

1) temporary seeding of disturbed areas,
2) seeding or hydromulching on erosion susceptible slopes,
3) establishing temporary sediment barriers consisting of a row of entrenched and anchored straw bales,

4) construction of entrenched and staked filter fabric silt fences, and
5) assurance of an undisturbed natural zone between construction staging areas and the Trinity River.

C. Discuss how hydraulically dredged materials will be handled to ensure maximum settling of solids before discharging the decant water. Plans should include a calculation of minimum settling times with supporting data (Reference: Technical Report, DS-7810, Dredge Material Research Program, GUIDELINES FOR DESIGNING, OPERATING, AND MAINTAINING DREDGED MATERIAL CONTAINMENT AREAS). If future maintenance dredging will be required, the disposal site should be designed to accommodate additional dredged materials. If not, please include plans for periodically removing the dried sediments from the disposal area.

Not Applicable

D. Describe any methods used to test the sediments for contamination, especially when dredging in an area known or likely to be contaminated, such as downstream of municipal or industrial wastewater discharges.

Not Applicable

Alternatives Analysis Checklist
For the Trinity Parkway
North Texas Tollway Authority

I. Alternatives

A. How could you satisfy your needs in ways that do not affect wetlands?

The need and purpose for the project are adequately discussed in **Section 1.2 - Need and Purpose** of the SDEIS. Selection of the No-Build Alternative would be a means to avoid impacting wetlands, yet would not necessarily meet the needs of the applicant. There are Build Alternatives being considered that would substantially reduce the impacts to wetlands. Selection of such an alternative as the preferred alternative would be a means to avoid impacting wetlands.

B. How could the project be re-designed to fit the site without affecting wetlands?

As noted above, there are alternatives being considered that have minimal effect on wetlands. Of the other alternatives considered, given their location within the Dallas Floodway, re-design would have to consider bridging the entire length of the remaining alternatives to avoid affecting wetlands.

C. How could the project be made smaller and still meet your needs?

The Trinity Parkway Corridor Major Transportation Investment Study (MTIS) (TxDOT, 1998a) indicated that an eight-lane reliever route (reducing to six lanes in the southern segment) would provide approximately 50 percent of the goal for transportation capacity improvement in the Canyon, Mixmaster, and Lower Stemmons Freeway corridors. The proposed Build Alternatives have been reduced from eight lanes to six lanes. Any further significant reduction would not necessarily meet the needs of the project. **Chapter 1 - Need and Purpose for Action** of the SDEIS details the specific needs and design requirements of the proposed project.

D. What other sites were considered?

1. What geographical area was searched for alternative sites?

As noted above, the goal served towards improving transportation capacity in the Canyon, Mixmaster, and Lower Stemmons Freeway corridors. As such, the geographical search area was limited to these extents.

2. *How did you determine whether other non-wetland sites are available for development in the area?*

As outlined in **Chapter 2 - Alternatives Considered** of the SDEIS, alternatives were developed and evaluated based on their ability to meet the project need and purpose of the study. This analysis process reduced the number of alternatives over time and allowed a higher level of detailed analysis on the remaining candidates. Comparisons of alternatives for the Trinity Parkway corridor were developed under the following categories:

- Environmental Effects
- Social and Economic Effects
- Mobility Benefits
- Cost Effectiveness and Affordability
- Compatibility with Other Corridor Projects
- Effects During Construction

3. *In recent years, have you sold or leased any lands located within the vicinity of the project? If so, why were they unsuitable for the project?*

Not Applicable

E. *What are the consequences of not building the project?*

Selection of the No-Build Alternative would result in no direct impact to aquatic resources. However, the subsequent increase in traffic on other existing facilities could result in other environmental consequences which are outlined in detail for a broad range of categories in **Chapter 4 - Environmental Consequences** of the SDEIS.

II. Comparison of Alternatives

The Permittee has evaluated a variety of alternatives that would serve to minimize and avoid impacts to the aquatic environment, yet still satisfy the need and purpose of the project. Eight Build Alternatives and one No-Build Alternative were compared during the preparation of the Trinity Parkway SDEIS to determine the social, economic, and environmental impacts of each alternative.

- **Alternative 1: No-Build -** represents the case in which the Trinity Parkway is not constructed.
- **Alternative 2A: Irving/Industrial Boulevard (Elevated)** - Roadway is installed as a double-deck structure, above existing city streets.
- **Alternative 2B: Irving/Industrial Boulevard (At Grade)** - Similar to 2A, the facility is maintained as six lanes throughout, the existing lanes on Industrial/Irving Boulevards and Lamar street are replaced as frontage roads.

- **Alternative 3A: Combined Parkway (Original)** - A six-lane to four-lane staged roadway is constructed within the floodway on the riverside face of the east levee.
- **Alternative 3B: Combined Parkway (Modified)** - Similar to 3B, with fewer freeway connections and main lane toll gantries removed from the floodway to upland areas.
- **Alternative 3C: Combined Parkway (Further Modified)** - Alternative 3C is a variant of Alternative 3B and is distinguished by relocation of the main lanes of the roadway approximately 60 to 100 feet towards the river in the general area of downtown Dallas.
- **Alternative 4A: Split Parkway (Riverside - Original)** - A six-lane to four-lane staged roadway would be constructed with southbound lanes on the riverside face of the west levee and northbound lanes on the riverside face of the east levee.
- **Alternative 4B: Split Parkway (Riverside - Modified)** - Alternative 4B is a variant of Alternative 4A and is distinguished by relocation of the main lanes of the roadway approximately 60 to 100 feet towards the river in the general area of downtown Dallas.
- **Alternative 5: Split Parkway (Landside)** - Similar to Alternative 4A, but mainlanes would be constructed on the landside of the floodway levees.

A. How do the costs compare for the alternatives considered above?

See **Section 6.4 - Cost Estimate for the Trinity Parkway Alternatives** in the SDEIS for a cost comparison of the alternatives considered.

B. Are there logistical (location, access, transportation, etc.) reasons that limit the alternatives considered?

See **Chapter 2 - Alternatives Considered** in the SDEIS for a description of the processes involved in the development of alternatives.

C. Are there technological limitations for the alternatives considered?

Not Applicable

D. Are there other reasons certain alternatives are not feasible?

See **Section 2.4 - Other Design Considerations** in the SDEIS for other design considerations in the development of alternatives.

III. If you have not chosen an alternative that would avoid wetland impacts, explain:

Not Applicable at this stage of review.

IV. Please provide a comparison of each criterion (from Part II) for each site evaluation in the alternatives analysis.

Not Applicable at this stage of review.

THIS PAGE INTENTIONALLY LEFT BLANK

APPENDIX J

PRELIMINARY SECTION 404 MITIGATION PLAN

THIS PAGE INTENTIONALLY LEFT BLANK

TABLE OF CONTENTS

APPENDIX J - PRELIMINARY SECTION 404 MITIGATION PLAN

1.0 INTRODUCTION J-1

2.0 BASELINE INFORMATION J-1
- 2.1 Avoidance and Minimization Measures J-1
- 2.2 Impacts to Waters of the U.S., Including Wetlands J-3
  - 2.2.1 Direct Impacts J-3
  - 2.2.2 Indirect Upstream/Downstream Impacts J-7
- 2.3 Description of the Mitigation Area J-7
- 2.4 Jurisdictional Determination of the Mitigation Area J-8
- 2.5 Existing Liens and Encumbrances J-9

3.0 SITE SELECTION J-9
- 3.1 Alternative Sites Evaluation J-9
- 3.2 Site Compatibility J-9
- 3.3 Contributions to the Aquatic Environment J-10

4.0 GOALS AND OBJECTIVES J-11

5.0 MITIGATION WORK PLAN J-11
- 5.1 Location of Ground Disturbing Activities J-11
- 5.2 Construction Protective Measures J-12
- 5.3 Hydrologic Information J-12
  - 5.3.1 Hydrologic Recharge Frequency J-12
  - 5.3.2 Secondary Effects to Surrounding Areas J-13
- 5.4 Soil Substrate J-13
- 5.5 Mitigation Planting Plan J-13
  - 5.5.1 Riparian Plantings J-13
  - 5.5.2 Native Grass Plantings J-14
- 5.6 Achievement of Goals J-14

6.0 PERFORMANCE STANDARDS AND SUCCESS CRITERIA J-14

7.0 COMPLIANCE WITH OTHER LEGAL REQUIREMENTS J-15
- 7.1 Threatened and Endangered Species J-15
- 7.2 Cultural Resources J-15

8.0 LONG-TERM MANAGEMENT AND MONITORING J-16
- 8.1 Long-term Operation Plan J-16
- 8.2 Implementation Schedule J-17
- 8.3 Monitoring Techniques J-17
- 8.4 Monitoring Schedule J-18

9.0 CONTINGENCY PLAN J-19

10.0 RESPONSIBLE PARTIES J-20

11.0 LONG-TERM SITE PROTECTION J-20

12.0 FINANCIAL ASSURANCES J-21

List of Figures

Figure 1 - Project Vicinity Map J-23
Figure 2 - Local Area Map J-24
Figure 3 - Proposed Mitigation Area Baseline Conditions J-25
Figure 4 - Proposed Mitigation Area Proposed Conditions J-26
Figure 5 - Typical Cross Section J-27
Figure 6 - Proposed Planting Plan J-28

THIS PAGE INTENTIONALLY LEFT BLANK

APPENDIX J

PRELIMINARY SECTION 404 MITIGATION PLAN

1.0 INTRODUCTION

This is a preliminary mitigation plan evaluation of the proposed alternatives for the Trinity Parkway project in light of the requirements of Section 404 of the Clean Water Act, and Section 10 of the Rivers and Harbors Act of 1899, following compensatory mitigation guidelines outlined in "USACE Fort Worth Draft Mitigation Guidelines" (2003 revised 2005). Compliance with the guidelines is a basic requirement for receiving a permit under Section 404 from the U.S. Army Corps of Engineers (USACE), which issues permits for the dredge or fill of waters of the U.S., including wetlands. This mitigation plan has been prepared as part of the Trinity Parkway Supplemental Draft Environmental Impact Statement (SDEIS) for use in evaluating the proposed alternatives. This document frequently incorporates information from the SDEIS, by reference, when appropriate.

This mitigation plan is based on a preliminary design of the project alternatives, and identifies environmental impacts and necessary compensatory mitigation associated with the proposed action insofar as present design data allow. Some of the specific information may not be as accurate as final design plans may facilitate. This preliminary compensatory mitigation plan must consider eight separate Build Alternatives and presents a mitigation plan that generally would be deemed adequate for any of the Build Alternatives. When a single preferred alternative is identified, the compensatory mitigation plan would be revised and scaled accordingly, and a final mitigation plan that compensates for unavoidable impacts to waters of the U.S., including wetlands, associated with the preferred alternative would be prepared.

2.0 BASELINE INFORMATION

2.1 AVOIDANCE AND MINIMIZATION MEASURES

A total of nine alternatives (eight Build Alternatives and the No-Build Alternative) are being considered with respect to their transportation benefits, socioeconomic and environmental impacts (beneficial and/or adverse), and costs. Five of the Build Alternatives, along with other alternative variations, were developed after a lengthy public participation process and publication of TxDOT's *Trinity Parkway Corridor Major Transportation Investment Study* (*MTIS*) (1998a). Additional Build Alternatives were added after further public input and consultation with the Dallas City Council in the fall 2003 and the

USACE in fall 2006. Certain MTIS alternatives no longer under consideration would be unable to meet the project objectives and/or would have had greater environmental impacts. These alternatives are discussed in **Chapter 2** of the SDEIS. The eight Build Alternatives that were advanced for further analysis were those that met the need and purpose, were supported by local governments and/or various public/private groups, and avoided or minimized adverse environmental impacts.

Upon selection of a preferred alternative, several best management practices (BMPs) would be implemented to avoid and minimize impacts to waters of the U.S., including wetlands. The majority of BMPs would be associated with waters of the U.S., including wetlands, directly impacted by the excavation of potential borrow areas and the placement of fill materials for the construction of roadway embankments. However, BMPs would also be implemented in mitigation construction areas to avoid any incidental impacts to non-target waters of the U.S., including wetlands that would otherwise have been avoided. The following is a list of actions that would be taken to avoid and minimize impacts to waters of the U.S., including wetlands.

Incremental Grading

Phasing of the construction areas would serve to remove vegetation only in areas that are actively under construction. Maintaining vegetation coverage for as long as possible serves to reduce secondary impacts that may occur from erosion and sedimentation of bare ground. Incremental grading should also serve to phase the eventual loss of aquatic function associated with the discharge or excavation activities rather than have the loss of aquatic function being absorbed all at once. The compensatory mitigation areas would be constructed in the earlier phases of construction and, combined with incremental grading, should serve to reduce the temporal loss of aquatic function that occurs between the loss of waters of the U.S., including wetlands, and maturation of the mitigation area.

Temporary Exclusion Fencing

A qualified mitigation specialist would identify all waters of the U.S., including wetlands that are proposed to be avoided or preserved in the vicinity of construction staging areas. Final design would incorporate the placement of temporary construction fencing to be placed around designated areas to help avoid accidental and/or unauthorized activities in waters of the U.S., including wetlands.

Stormwater Pollution Prevention Plan (SWPPP)

Stormwater runoff from construction activities can have a significant impact on water quality. As stormwater flows over a construction site, it may pick up pollutants like sediment, debris, and chemicals and subsequently deposit them in receiving waters, including wetlands. Implementation of a SWPPP through the use of various soil stabilization and runoff control procedures would serve to regulate

stormwater runoff from the construction areas thereby minimizing potential indirect impacts to waters of the U.S., including wetlands.

Soil Stockpiling

In the event that soil stockpiling is required during construction, a mitigation specialist would work with the final design team to identify disposal sites that would avoid any unauthorized placement of fill within waters of the U.S., including wetlands. Final design would include a soil management plan for construction operations, which outlines construction phasing and soil stockpiling to avoid and minimize disturbance of waters of the U.S., including wetlands, and associated buffer areas.

2.2 IMPACTS TO WATERS OF THE U.S., INCLUDING WETLANDS

2.2.1 Direct Impacts

The proposed Build Alternatives would involve the removal of wetlands considered waters of the U.S. Alternatives 2A and 2B would have less of an adverse impact on wetlands than the riverside alternatives (Alternatives 3A, 3B, 3C, 4A, 4B and 5). **Table 4-35, Section 4.8.2** of the SDEIS provides a quantitative description of impacted waters of the U.S., including wetlands, and aquatic functions associated with those losses for each potential alternative.

Aquatic features impacted by the proposed project, as outlined in the SDEIS, may serve a variety of chemical, physical, and biological functions, each of which are dependent on specific variables necessary for the function to occur. Variables common to different types of functions may include frequency and duration of overbank flow, depth of inundation, topographic variability, vegetative biomass, vegetative structural diversity, and water table fluctuation. The following discusses common functions typically associated with aquatic features similar to those on-site in an effort to provide a qualitative assessment of functions impacted by the project.

Dynamic Surface Water Storage

Dynamic surface water storage of an aquatic feature refers to the capacity to detain moving water from overbank flow for a short duration during flood events. As overbank flow is detained in a wetland, the timing of the flood wave is reduced, thereby resulting in reduced and delayed downstream peak flows. The flood damage reduction potential is the perceived public interest or value. Frequency and duration of overbank flow is the most important variable of this function, as other functions, such as sediment retention, are dependent on it. Higher than average frequencies may overload the site with sediment and nutrients thereby impacting other functions such as maintenance of plant communities. Conversely, lower than average frequencies can affect vegetative communities as well as affect the avenue for

organisms to access aquatic areas for feeding and recruitment. Other factors such as plant density and structure may be considered, as higher densities and various strata reduce velocities; however, overbank flow or surface water flow is an absolute requirement when considering this function. The bank-full discharge frequency for the Trinity River within the study area is between 1 and 2 years.

Due to the design and purpose of the Dallas Floodway, overbank flows may be common during a given year. These overbank flows provide aquatic features with the opportunity to provide dynamic surface water storage during these events. Emergent wetlands throughout the study area vary in their depth and vegetative diversity, but many have vegetated bottoms, which act to slow both surface runoff and overbank flow velocities. There are some strictly open water features in the study area, but due to their lack of vegetative growth and their position in a maintained urban setting, they provide little towards reducing over bank flow velocities.

Long-Term Surface Water Storage

This function differs from dynamic surface water storage in that it is associated with standing water that is not moving over the surface. The source of water may be overbank flow, surface flow, or direct precipitation. Aquatic features that store water from overbank flows eventually recharge surficial groundwater, which would eventually become base channel flows and could lead to the moderation of seasonal flows downstream. Long-term storage of water can be visually pleasing and would likely be the foremost recognized public value. Furthermore, long-term storage is critical in the maintenance of specific plant and animal communities, which can also be considered a public value.

Open water features in the study area provide the greatest opportunity for long-term surface water storage. Crow Lake is a maintained open water feature in a park setting and is recognized as an element of public value within the Dallas Floodway. Several unnamed open water features on the east bank of the Trinity River, between the confluence and Westmoreland Road, had standing water during August 2005 field visits, leading to the assumption that these are perennial open water features.

Large emergent wetlands provide an opportunity for long-term water storage, but to a lesser degree than the open water features. Over the course of the study, emergent wetlands were observed both with and without standing water; however, most did not have standing water during August 2005 field visits.

Nutrient Cycling

Nutrient cycling is a commonly referenced function that may be simply described as the process of converting nutrients and other elements from one form to another. Two major variables for this process are primary productivity, in which nutrients are taken up by plants, and detritus turnover, whereby nutrients are released for renewed uptake by plants, thus completing the cycle. The presence of living

biomass, such as herbaceous plants, is a reliable indicator that nutrient uptake processes are occurring. Likewise, the presence of down and dead woody debris, or other organic debris are reliable field indicators of detritus stock.

The semi-annual maintenance mowing of the Dallas Floodway provides the opportunity for detrital stock to accumulate, though it inhibits the formation of dense, diverse vegetative communities such as scrub/shrub and forested wetlands. This function is also supplemented by the introduction of woody debris that is deposited during times of overbank flows. Many of the emergent wetlands have diverse herbaceous layers, which is evidence for nutrient uptake. The only forested wetland, which is outside the maintenance area of the Dallas Floodway, may perform this function at a higher level as it has enough local woody debris to aid detritus turnover. Open water classifications generally have a low basal coverage of emergent vegetation, which is often limited to the shoreline transition to upland areas. This transition is usually steep and this zone is very narrow. These characteristics are also true for the channels associated with the drainage sumps, where vegetation is limited to shoreline vegetation, if vegetation is present at all.

Removal of Imported Elements and Compounds

This function pertains to the ability of an aquatic feature to intercept and remove non-point source pollution from the waterway. This implies the long-term accumulation of elements and compounds, in contrast to the nutrient cycling function that recycles through the system on a periodic basis. Important variables affecting the removal are the frequency of overbank flow and upland surface flow. If an aquatic feature is to remove imported elements, the elements must have an avenue to enter the system. In areas where overbank flows are infrequent, upland surface flows may provide an avenue when precipitation rates exceed soil infiltration rates. Sorption properties of the soil must also be considered as finer textured soils tend to have greater sorption capacities than coarse textures. Organic matter also has sorptive properties and may also provide a surface for microbial activity which plays an additional role in the removal of elements.

The Trinity River has a bank-full discharge frequency between 1 and 2 years, which provides a source for the introduction of non-point source pollution into the aquatic system of the Dallas Floodway. This function is also supplemented by elements introduced via the linear drainage sumps. Soils within the study area are typical of the Trinity Clay, frequently flooded soil classification, which is a fine textured soil with sorptive properties that promote the removal of imported elements and compounds. Emergent wetlands with a dense herbaceous layer have a high organic matter content which provides an additional opportunity for microbial activity to contribute to the removal of imported elements and compounds. The forested wetland may have a greater capacity for the removal of imported elements because it has the

soils and hydrology sufficient to recycle compounds, and because it is not subject to periodic maintenance activities which may interrupt these cycles.

Maintenance of Plant Communities

This function relates to the diversity and structure of the plant community as revealed by the dominant species of each vegetative stratum, as well as by the physical characteristics of the vegetation. This function is important since a diverse plant community is a variable in the evaluation of many of the aquatic functions already discussed. Diverse plant communities create roughness for the reduction of flood velocities, provide organic matter for soil development and nutrient cycling, and provide an array of wildlife habitats for resident and migratory wildlife.

Due to the semi-annual maintenance mowing of the Dallas Floodway, the diversity and structure of the plant community is essentially static because there is little opportunity for scrub/shrub or forested wetland communities to develop. The Trinity River deposits seeds from upstream sources, which help aid diversification of herbaceous communities, but a thorough analysis of the study area revealed fairly homogenous vegetation throughout each community type. Features downstream of the DART/AT&SF railroad bridges, with the exception of those within TXU easements, have a greater capacity for this function because plant communities are allowed to develop both tree and understory strata to increase the diversity and quality of the vegetative communities.

Maintenance of Wildlife Habitat

The ability of aquatic areas to function as wildlife habitat is a very broad notion that must consider several variables. Generally, this function is associated with the suitability of vegetation structure, not composition, for sustaining animal populations. There are different quantitative analyses implemented by the resource agencies such as the Habitat Evaluation Procedure or Wildlife Habitat Appraisal Procedure (WHAP), which focus on vegetative structure and spatial relationships to evaluate wildlife habitat. Species composition generally is a minor component of these evaluations. The spatial relationship is significant since connectivity to various aquatic habitats is important for species with multiple specific habitat life requirements. The difficulty with evaluating spatial relationships is that connectivity is a matter of scale depending on the type of wildlife species in question.

As previously mentioned, vegetative structural diversity within the study area is generally absent. With the exception of the narrow riparian corridor surrounding the Trinity River, the study area provides little to moderate vegetative cover for wildlife. Generalist species which have the capacity to adapt to an urban setting, are the most commonly observed species. Wildlife observed the study area includes shorebirds and migratory water fowl, and hawks are known to reside in the trees within the riparian corridor. Though not observed, there was evidence of beaver, otter, and rodent activity in some areas. These species are

known to inhabit the larger emergent wetland communities, but the smaller, lower quality communities provide moderate food, forage, or protection and wildlife use would be limited use by migratory water fowl, reptile, and amphibian species.

2.2.2 Indirect Upstream/Downstream Impacts

All of the Build Alternatives have the potential to affect each of the listed aquatic functions described above, most specifically the Floodway Alternatives. Many of these functions depend on variables such as frequency of overbank flooding, vegetative diversity at both the structural and species richness level, and topographic variability. Non-target aquatic features adjacent, upstream, or downstream of the project would retain these characteristics and there would be no expected effect on their functional capability.

As the proposed project is completed, the potential exists for secondary indirect impacts that could affect the functional capability of non-target aquatic features. Most notably, changes in land use could lead to increased runoff and sedimentation into non-target areas that may be adjacent to the proposed project. Such processes could affect the vegetative composition or topographic variability on non-target waters which could have a subsequent effect on each of the functions described above. However, the aquatic features in the study area are currently exposed to these processes from numerous transportation projects and seem to suffer no ill-effect. Nonetheless, implementation of post-construction BMPs and an adequate compensatory mitigation plan should serve to offset any secondary impacts to non-target waters of the U.S., including wetlands.

2.3 DESCRIPTION OF THE MITIGATION AREA

The proposed mitigation area encompasses approximately 134 acres adjacent to the proposed project within the Dallas Floodway. Specifically, the proposed mitigation area encompasses an area of the east overbank floodplain of the Trinity River that extends between the Hampton Road and Westmoreland Road/Mockingbird Lane crossings of the Dallas Floodway as shown in **Figure 1** and **Figure 2**.

The predominant vegetative community is the upland grassland type which may be characterized as non-waters of the U.S., including wetlands. The proposed mitigation area contains other vegetative types, including emergent wetlands, open water, and perennial stream channels. The following discusses each type of water of the U.S. feature, and provides a detailed analysis of a representative area for each feature type.

Mowed Emergent Wetlands

All emergent wetlands in the mitigation area are mowed semi-annually (as weather conditions permit) to improve the efficiency of flood conveyance within the Dallas Floodway. Mowed emergent wetlands in the mitigation area have the same vegetative species composition, hydrology, and soils as the other unmowed emergent wetlands within the Dallas Floodway. Vegetation in the mowed wetlands typically includes balloonvine (*Cardiospermum halicacabum*), wireweed (*Aster subulatus*), sumpweed (*Iva annua*), cocklebur (*Xanthium strumarium*) and crow-foot caric sedge (*Carex crus-corvi*). However, in these areas transition species such as giant ragweed were less than one foot tall, while in un-mowed areas it was often in excess of ten feet tall. Another noticeable characteristic is the thick layer of decaying plant matter on the surface, left as a result of the semi-annual mowing.

Perennial Streams

The Trinity River, a navigable water of the U.S., is the prominent aquatic feature in the project area and represents the western limits of the mitigation area. The Trinity River flows for approximately 5,900 linear feet adjacent to the mitigation area. Vegetation within the narrow riparian corridor of the Trinity River is limited to cattails (*Typha* spp.) on silt covered benches, and Virginia wildrye (*Elymus viriginicus*) along some overbank areas. The dominant tree species within the corridor are cottonwood (*Populus deltoides*) and black willow (*Salix nigra*).

Intermittent Open Water – Linear Drainage Sumps

The linear drainage sumps, during a year with normal patterns of precipitation, have standing or flowing water for sufficient duration to establish an ordinary high water mark. The function of the linear drainage sumps is to provide an avenue for stormwater to flow or be pumped from outside the levees into the Trinity River. Vegetation associated with these features is typically non-emergent, sparse, or in most cases, absent. Typically, the drainage sumps have standing water for most of the year, with the exception of periods of prolonged drought. The Hampton Pump Station is situated on the land side of the Dallas Floodway south and adjacent (not included) to the proposed mitigation area.

2.4 JURISDICTIONAL DETERMINATION OF THE MITIGATION AREA

A waters of the U.S., including wetlands, jurisdictional determination in accordance with the “1987 Corps of Engineers Wetlands Delineation Manual” was conducted for the entire project study area and included the proposed mitigation area. The most recent jurisdictional determination submittal to the USACE Fort Worth District documenting techniques and methodologies was submitted on May 12, 2006. The jurisdictional determination was approved by the USACE in a letter dated June 19, 2006. **Figure 3** shows the baseline map for waters of the U.S., including wetlands, excerpted from the May 2006 determination, for the proposed mitigation area.

2.5 EXISTING LIENS AND ENCUMBRANCES

Because the proposed mitigation area is within the Dallas Floodway, it is therefore in a floodplain management area that is maintained by the City of Dallas Streets and Sanitation Department. Semi-annual mowing is a means employed by the City of Dallas to control overgrown vegetation within the Dallas Floodway so that flood elevations may be maintained.

One 48-inch concrete encased water line parallels the Westmoreland Road/Mockingbird Lane Bridge just west of the proposed mitigation area as shown on **Plate 3-11** of the SDEIS. No other known utilities are within the footprint of the proposed mitigation area.

The Hampton Pump Station is situated on the land side of the Dallas Floodway adjacent to the proposed mitigation area. The footprint of the mitigation area lies west and adjacent to the linear drainage channel that conveys stormwater from the Hampton Pump Station to the Trinity River channel.

3.0 SITE SELECTION

3.1 ALTERNATIVE SITES EVALUATION

The USACE *Regulatory Guidance Letter 02-2* applies to all compensatory mitigation proposals and states that mitigation should be required in areas adjacent or contiguous to the watersheds and, when practicable, in areas adjacent or contiguous to the discharge site as it is more likely to compensate for locally important functions that may be impacted by the proposed project (USACE, 2002).

Given that the landscape beyond the Dallas Floodway is for the most part entirely urbanized, it was deemed that a compatible mitigation site of sufficient size was not available that could be considered for near site mitigation. As such, on-site mitigation was considered the most practicable alternative given the large amount of non-target landscape within the study area. During the selection of a suitable mitigation area within the study area, a sufficient size in one large contiguous piece was deemed a preferable characteristic. Terrain that could serve to adequately replace lost aquatic functions with only a minimal amount of disturbance to the site was also deemed a preferable characteristic.

3.2 SITE COMPATIBILITY

The likelihood for success, ecological sustainability, practicability of long-term monitoring and maintenance or operation and maintenance, and relative costs of mitigation alternatives were all

considerations in the selection of the mitigation site. Given the proximity to the Trinity River channel and the known frequency of overbank flooding within the project area, there is little doubt that the proposed mitigation area would receive adequate hydrologic recharge and readily become self-sustaining without any outside management.

The proposed mitigation area is one of the few portions of the Dallas Floodway that is not intermixed with a large amount of existing wetland complexes. However, this is due to the fact that linear drainage features within this area drain any collected surface runoff or overbank flows into the linear drainage from the Hampton Pump Station. Sufficient terrain exists to create a substantial amount of shallow, intermittent wetland areas by impoundment of these drainages with only minimal earthwork in addition to the required road embankment construction.

The City of Dallas has had an active role in the management of the Dallas Floodway for over 60 years and is currently an ever-present entity, restricting access to the Dallas Floodway via ballards and locked gates. Although the proposed project would increase the public accessibility to the Dallas Floodway, the presence of an established and visible government entity should serve to ensure proper maintenance and protection of the proposed mitigation areas. Because the Dallas Floodway is essentially classified as City of Dallas “open” space, there should be no concerns of the properties, including the mitigation area, being transferred to a different owner that would be otherwise unfamiliar with the mitigation area or the requirements of this mitigation plan. Also, given the significance of the Dallas Floodway to the City of Dallas as a flood control improvement, it is unlikely that the property would leave government ownership.

3.3 CONTRIBUTIONS TO THE AQUATIC ENVIRONMENT

Given the proximity of the mitigation area to the proposed impacts, successful implementation of the mitigation plan should adequately replace the loss of aquatic function associated with the local watershed. Although the majority of the impacts to waters of the U.S., including wetlands, are associated with smaller wetlands interspersed throughout the Dallas Floodway, a large contiguous wetland complex would nevertheless be consistent with achieving the goal of no net loss. The wetland delineation for the proposed project area showed one large wetland complex that was noticeably larger than the other wetland features identified in the study area. This large wetland area had greater topographic variability and vegetative diversity, both of which are critical variables in determining the level of various aquatic functions (e.g., energy dissipation, wildlife habitat) for wetlands. Similarly, the proposed wetland creation activities would serve to incorporate these same variables thereby providing an overall lift to the aquatic environment.

4.0 GOALS AND OBJECTIVES

The proposed project has the potential to impact each of the aquatic functions as outlined in **Section 2.2**. As such, implementation of a successful mitigation plan should result in a landscape with variables that are intrinsic to each of those functions. As noted in **Section 2.2**, such variables common to most of those functions that should be incorporated into the mitigation plan include frequent overbank flooding, vegetative diversity at both the structural and species richness level, and topographic variability.

The location of the mitigation area with respect to the Trinity River channel should ensure frequent overbank flooding and hydrologic recharge to develop a self-sustaining wetland system. Furthermore, this variable should be readily measurable throughout any given year given the relative visibility of the proposed mitigation. The proposed mitigation plan attempts to utilize existing grades as much as possible, which should avoid creating a homogeneous surface, both horizontally and vertically.

The most critical aspect towards providing adequate compensatory mitigation is the development of a diverse vegetative community. Vegetative cover is critical to several aquatic functions and may be qualitatively and quantitatively measured in the field. As the primary aquatic loss of aquatic function would be that associated with mowed emergent wetlands within the Dallas Floodway, the establishment of new wetlands with similar vegetative coverage and composition as other wetlands in the Dallas Floodway should be a standard towards evaluating the success of the mitigation area.

It was noted in **Section 2.2.1** of this document that the Dallas Floodway maintenance schedule precludes the development of wetlands and other vegetative communities beyond the herbaceous layer. Although there may be a temporary development to the scrub/shrub stage, annual mowing cycles eventually reset the succession process. A component of the mitigation plan would be to remove the mitigation area from the usual maintenance schedule so that the vegetative communities, both aquatic and terrestrial, may grow beyond the herbaceous levels. Such development would increase the functional capabilities of the created wetland areas and should be easy to quantify in subsequent monitoring reports as discussed in **Section 8.0** of this document.

5.0 MITIGATION WORK PLAN

5.1 LOCATION OF GROUND DISTURBING ACTIVITIES

Six wetland cells totaling approximately 76 acres would be created by implementation of the mitigation plan. As shown on **Figure 4**, four wetland cells identified as Cell A, Cell B, Cell C, and Cell F would be

created adjacent to the slope of the existing levee. Currently, linear drainages that parallel the toe of the existing levee and levee maintenance roads drain the terrain into the sump from the Hampton Pump Station. Minimal grading work would be employed to impound water to a depth of 0-24 inches for a substantial area. Although minimal grading would be required on the river side of Cell B, this method would utilize existing terrain for the most part.

Wetland Cell D and Cell E would be constructed as bowls in the existing landscape that would be excavated to a maximum depth of 12 inches. Side slopes would tie into existing grades gradually so as to minimize the risk for erosion and gullying while the ground is temporarily exposed. A typical cross section is provided as **Figure 5**. Special care would be taken to maintain an adequate vegetated buffer between the narrow riparian corridor of the Trinity River channel and the limits of the wetland, and all construction equipment would access the site from the levee side of the wetland.

5.2 CONSTRUCTION PROTECTIVE MEASURES

Section 2.1 of this document outlines protective measures that would be employed to minimize accidental and/or non-authorized activities in waters of the U.S., including wetlands, during construction. Because construction of the mitigation area would likewise employ large construction equipment, similar measures would be employed before and during construction. As mitigation would occur, concurrent with the construction of the proposed project, the possibility exists that construction of the mitigation area may be complete prior to completion of the proposed project. In such an instance, temporary construction fencing requirements, including signage, would then extend to the limits of the mitigation area.

5.3 HYDROLOGIC INFORMATION

5.3.1 Hydrologic Recharge Frequency

Although surface runoff is expected to be a substantial contributor to supporting the hydrologic regime of the mitigation area, Trinity River hydraulic models for the post-project condition suggest that a one-year storm event would be sufficient to result of overbank flooding in the vicinity of the mitigation area. This frequent recharge of wetland areas and the subsequent ponding effect as floodwaters recede should be sufficient for the development of hydric soils and hydrophytic vegetation communities that would be expected to follow.

5.3.2 Secondary Effects to Surrounding Areas

The hydraulic model for the Trinity River extended both upstream and downstream of the proposed mitigation area. As noted in **Section 5.3.1**, a one-year storm event is sufficient to result in overbank flooding of the Trinity River channel in the vicinity of the mitigation area. This effect holds true for areas both upstream and downstream of the proposed mitigation area. The model was constructed to include the constructed mitigation area in the calculations. As such, it is expected that construction of the mitigation area would have no adverse hydrologic effect on upstream or downstream aquatic communities.

5.4 SOIL SUBSTRATE

As noted in **Section 3.5.3.3** of the SDEIS, sediments contained within the impacted wetlands and other waters of the U.S. are predominantly floodplain clays common to the Trinity River Basin. The most common of these is the Trinity clay series which is the mapped soil type for the proposed mitigation area. The Trinity Clay series is characterized as dark mineral soils with a high flood hazard, clayey texture, and very slow to moderately slow soil permeability. The waters of the U.S., including wetlands, delineation of the Dallas Floodway demonstrates the capacity of these soils to impound water for extended periods of time. It is anticipated the soil substrate in the proposed mitigation area should demonstrate a similar capability.

5.5 MITIGATION PLANTING PLAN

5.5.1 Riparian Plantings

Riparian plantings would occur within designated areas (approximately 11 acres) as shown in **Figure 4,** and would consist of bare-root seedlings planted at a density of 300 trees per acre. All planting areas would be treated as necessary to prepare a bed prior to planting. **Table J-1** represents a mix of species that may be found in the local Trinity River floodplain and are also expected to be readily available from local nurseries for reforestation plantings. The table lists the target species, with the emphasis placed on hard mast producing hardwoods such as oak. Appropriate substitutes may be used should there be a lack of nursery availability for a particular species or site conditions dictate otherwise. No shrub species may be substituted for tree species. Any substitutions for species listed in **Table J-1** shall receive USACE approval.

TABLE J-1. PROPOSED REFORESTATION PLANTING LIST

Tree/Shrub Species	Common Name	Planting Density
Quercus shumardii	Shumard oak	~25% by composition
Quercus macrocarpa	Bur oak	~25% by composition
Carya illinoensis	Pecan	~25% by composition
Morus rubra	Red mulberry	~6% by composition
Ulmus crassifolia	Cedar elm	~6% by composition
Platanus occidentalis	Sycamore	~6% by composition
Ilex decidua	Deciduous holly	~6% by composition

5.5.2 Native Grass Plantings

A native grass seed mix comprised of floodplain tolerant species would be planted to provide immediate ground cover for the newly graded areas and to deter the colonization of weed species (e.g., ragweed, sumpweed) that may otherwise compete in the tree planting areas. Seedlings would come from a local seed supplier. Species mix and planting rates are specified in **Figure 6**.

5.6 ACHIEVEMENT OF GOALS

Riparian tree plantings would seek to enhance plant diversity within the local watershed by adding a structural component of the aquatic ecosystem that is currently lacking. This increased structural diversity and species diversity should allow the mitigation areas to subsequently reach a level of function that is also generally lacking in the Dallas Floodway.

The native grass plantings would play a role primarily in the early stages of development within the mitigation area. The intent is to provide initial herbaceous cover with desirable species to prevent the colonization of weed species. It is anticipated that as the mitigation area matures and the hydrologic cycle for each area is established, colonization of plants such as *Carex* spp. and *Polygonum* spp. would replace the grass plantings in areas with hydric soils. Grass plantings would eventually serve as a transitory zone between wetlands and riparian planting areas.

6.0 PERFORMANCE STANDARDS AND SUCCESS CRITERIA

The Permittee shall ensure that all grass planting areas maintain 80 percent coverage two years from initial planting and achieve 80 percent coverage after five years. The Permittee shall also ensure that all bare-root planting areas maintain an average of 100 stems per acre survival two years from initial planting and achieve an average of 100 stems per acre survival after five years. In the event that success standards are not met, the Permittee shall replant as appropriate until the desired survival density is achieved. Volunteer growth of species provided in **Table J-1**, as well as other appropriate floodplain

species (i.e. green ash, bois d'arc) may be included in the monitoring counts; however, species such as cottonwood and black willow would not be counted. Composition of volunteer stem counts shall not exceed the corresponding percentages provided in table **Table J-1**. For volunteer species not listed in **Table J-1**, composition of volunteer stem counts shall not exceed 6%.

The Permittee shall be responsible for maintaining the mitigation areas to comply with **Section 4.0** above until such time as the Permittee provides documentation to, and receives verification from, the USACE that areas within the mitigation area intended to become:

a. waters of the U.S., including wetlands, meet the definition of a waters of the U.S., including wetlands, under the regulatory program regulations applicable on the date of the permit;

b. both wetlands and other waters of the U.S. meet the definition of a wetland under the Regulatory Program regulations applicable on the date of the permit;

c. waters of the U.S., including wetlands, are functioning as the intended type of waters of the U.S. and at an acceptable level of ecological performance; and

d. buffer and riparian zones and other areas integral to the enhancement of the aquatic ecosystem are functioning as the intended type of ecosystem component and at an acceptable level of ecological performance.

7.0 COMPLIANCE WITH OTHER LEGAL REQUIREMENTS

7.1 THREATENED AND ENDANGERED SPECIES

Potential effects of the project have been analyzed relative to federally listed threatened and endangered species with potential for occurrence in the vicinity of the project (see **Section 3.4.5, SDEIS**). Most of the federally listed species in this section of the SDEIS are considered as rare migrants in the project vicinity or there occurrence would be incidental in nature. No effects to federally listed threatened or endangered species are anticipated for any of the Build Alternatives.

7.2 CULTURAL RESOURCES

Each of the Build Alternatives has the potential to impact known cultural resources as discussed in the SDEIS. The information developed thus far on cultural resources would be used for evaluation of

alternatives leading to the recommendation of a preferred alternative. After a preferred alternative has been identified, additional investigations may be required. The type and amount of work required, if any, would be coordinated by the NTTA and TxDOT–Environmental Affairs Division with the State Historic Preservation Officer in compliance with Section 106 of the NHPA and Texas Antiquities Code.

Potential adverse impacts to cultural resources (archeological/historical) would be assessed, in consultation with the SHPO, for the proposed action during review of the Final EIS. This may include refinement of the planning concept to further avoid and minimize impacts to historic resources. In addition, Section 4(f) evaluations would be undertaken as needed in order to further assess the avoidance or minimization of adverse effects to historic properties (see **Chapter 5 Draft Section 4(f) Evaluation**). Where avoidance is determined to be neither prudent nor feasible, adverse effects can be mitigated through historical documentation, archeological excavation, or some other appropriate treatment of the affected historic resource.

8.0 LONG-TERM MANAGEMENT AND MONITORING

8.1 LONG-TERM OPERATION PLAN

The historical Trinity River floodplain was predominantly a bottomland forest community with intermixed aquatic habitats such as river meander scars, oxbow lakes, and sloughs prior to the development of the City of Dallas, the realignment of the two river forks, and construction of the Dallas Floodway levees. Flood control practices over the last century have modified the landscape associated with the Trinity River floodplain to a vegetative community that rarely has the opportunity to develop beyond the herbaceous layer.

Although the proposed mitigation area is within a managed flood control area, it is anticipated that the existing maintenance schedule (i.e., mowing) should not apply to the proposed mitigation area. Instead, the long-term vegetative management plan for the mitigation area would be an adaptive scheme that would serve to avoid disturbing the vegetation, hydrology, and other components of the mitigation area to the maximum extent practicable and let nature take its course. This should allow created wetland areas to develop into a component of the aquatic environment that functions at a level of ecological performance approximate to historic conditions. Although the Permittee reserves the right to periodically employ minimal-impact vegetation control methods (i.e., hand clearing, chemical treatment, shredding, disking) as needed to control non-native, invasive, and/or noxious species, the District will notify the USACE Regulatory Branch and receive its approval prior to conducting any vegetation control action that is not already described in this mitigation plan and approved by the USACE.

All proposed compensatory mitigation areas and buffer zones would be located on publicly owned land associated with the proposed project. Trash and debris removal and preventative measures, if necessary, shall become the responsibility of the Permittee. The Permittee would provide for the long-term protection and management of these mitigation areas, protecting the mitigation areas to the maximum extent practicable, from activities that would adversely affect the intended extent, condition, and function of these areas, as described in this mitigation plan.

8.2 IMPLEMENTATION SCHEDULE

The mitigation area would be constructed concurrent with the construction of the proposed project. It is anticipated that construction would begin during the dry season to minimize the potential effects of soil compaction from construction equipment. Any mitigation plantings would occur the following fall or winter once all earth moving activities have been completed. It is anticipated that the mitigation area can be started and completed within one to two years from the commencement of construction.

8.3 MONITORING TECHNIQUES

The Permittee shall monitor and report on the progress of the mitigation area toward achieving the goals and performance standards established by this document, and take all reasonable actions necessary to remediate any problem that prevents a component of the mitigation area from achieving the goals and performance standards set forth in this document. Schedules for monitoring and reporting actions, and the content of reports are summarized in **Section 8.4** of this document.

Created and enhanced emergent wetlands would be monitored biannually in the spring and fall for five years after implementation of construction or planting activities. Results from the monitoring would be incorporated into the annual monitoring report for that year. Upon signature of the permit, jurisdictional determinations would be conducted in accordance with the “1987 Corps of Engineers Wetland Delineation Manual” at the end of five years. Results from the delineation would be incorporated into the appropriate monitoring report for that monitoring period. Reforested areas would be monitored annually in the fall for five years after implementation of construction or planting activities. Results would be included in the annual monitoring report due at the end of each year. The condition of preserved areas would be monitored upon signature of the permit.

A WHAP or similar habitat assessment technique would be conducted as a baseline prior to mitigation construction and five years following completion of the mitigation construction. This assessment would be used to monitor the development of the mitigation area and the overall contribution to the aquatic environment. These assessments would focus on physical characteristics of the various habitats such as

vertical stratification, relative abundance, species frequency, and wildlife suitability. Results from the habitat assessment would be submitted with the appropriate monitoring report.

8.4 MONITORING SCHEDULE

The Permittee shall establish and implement a self-monitoring program that includes the following actions:

a. designation, in writing, of a responsible party to coordinate with the Regulatory Branch, Fort Worth District, USACE concerning on-site inspections and compliance with permit conditions;

b. notification to the USACE of the schedule of activities for each phase of the project at least 30 days prior to the start of soil-disturbing activities;

c. notification to the USACE of the date of the pre-construction meeting held by the Permittee to explain to construction contractor(s) the terms and conditions of the permit, provisions of the mitigation plan, and contractor responsibility in ensuring compliance with the permit; and

d. implementation of a reporting program that shall include annual, written compliance reports to the USACE, due October 1 each year, beginning in [FUTURE DATE]. The Permittee shall include in each compliance report any schedule changes and a summary of all activities that occurred during the reporting period, including demonstration of the Permittee compliance with the permit conditions, and documentation of the progress and/or completion of all authorized work, including mitigation activities. The Permittee shall detail in the first report the pre-construction conditions of the project area. Compliance reports are required even if no work is conducted during the reporting period. The Permittee shall submit compliance reports until the USACE verifies that the Permittee has successfully completed all compensatory mitigation plan requirements, the mitigation areas have met the standards of **Section 6.0**, and all authorized construction activities have been either completed or deleted from the project.

The Permittee shall monitor and report on the progress of the mitigation area toward achieving the goals and performance standards established by this document and take all reasonable actions necessary to remediate any problem that prevents a component of the mitigation area from achieving the goals and performance standards of this mitigation plan. The Permittee shall provide to the USACE periodic reports documenting the condition of the mitigation area and its progress toward achieving the goals and performance standards set forth in this document.

Each compliance report shall contain at a minimum the following information:

a. The results of the periodic surveys conducted since the last compliance report;

b. A detailed discussion of the relative success of enhancement activities conducted to date, including the conclusions about the likely cause and impact of any setback or failure that occurred and recommendations for future actions and strategies that might resolve those problems;

c. An overview of the current general ecological condition of the mitigation area including a description of the vegetative and wildlife communities, effectiveness of the enhancement activities accomplished to date, and relative progress of the mitigation area in achieving the ecological goals set forth in this document;

d. Pertinent additional information on such aspects of the mitigation area as hydrology, soils, vegetation, fish and wildlife use of the area, recreational and scientific use of the mitigation area, and acts of nature, such as disease, wildfire, and flooding, that occurred;

e. Proposals for any contingency or remedial measures; and

f. Photographs of the mitigation area taken from permanent locations that are accurately drawn on a photo location map. The photographs are intended to document the progress of each component of the mitigation area, as well as the mitigation area in general, toward achieving the goals and performance standards of the mitigation area.

9.0 CONTINGENCY PLAN

In the event that one or more components of the mitigation area do not achieve the performance standards or comply with any other requirements of this document, the following sequence of remedial actions shall be taken:

a. Upon discovering that a component of the mitigation area does not comply with the requirements of this document, the Permittee shall take all appropriate actions to bring that component into compliance as soon as practicable.

b. If remedial actions taken by the Permittee under the provisions of the preceding paragraph do not bring that component of the mitigation area into compliance with the requirements of this

document despite reasonable efforts being made by the Permittee, the Permittee may elect to submit to the USACE a proposal to modify the mitigation plan. Any modification to the mitigation plan shall require the approval of the USACE, after consulting with the coordinating agencies, before the modification can be implemented.

10.0 RESPONSIBLE PARTIES

All real property to be included within the mitigation is owned in fee simple by the City of Dallas and has been pledged by the Permittee for use consistent with this mitigation plan. The Permittee shall be responsible for developing, operating, and maintaining the mitigation area subject to the requirements of this document. This mitigation plan does not authorize, nor shall it be construed to permit, the establishment of any lien, encumbrance, or other claim with respect to the property, with the sole exception of the right on the part of USACE to require the Permittee to implement elements of the mitigation plan, including recording any deed restriction, required as a condition of the issuance of a permit under Section 404 of the Clean Water Act and Section 10 of the Rivers and Harbors Act of 1899 for discharges of dredged and fill material into waters of the U.S., including wetlands.

The Permittee shall retain a qualified mitigation specialist (biologist, ecologist or other specialist qualified in wetland restoration, enhancement, and creation work), to oversee project construction to the extent necessary to ensure compliance with all mitigation requirements of this permit. The Permittee shall have this mitigation specialist conduct all monitoring and produce any required monitoring reports.

11.0 LONG-TERM SITE PROTECTION

The Permittee shall dedicate in perpetuity, as wetland and wildlife preserve, the compensatory mitigation area totaling approximately 134 acres as identified in **Figure 4**. The only exceptions to the deed restrictions shall be easements in existence on [FUTURE DATE]. The mitigation area shall not be disturbed, except by those activities that would not adversely affect the intended extent, condition, and function of the mitigation area or by those activities specifically provided for in the approved mitigation plan or in the special conditions for this permit. The Permittee shall survey the mitigation area, develop an appropriate deed restriction for the surveyed area, submit the draft deed restriction to the USACE for review and approval, and then record the USACE-approved deed restriction with the county clerk. The Permittee shall provide a copy of the recorded deed restriction to the Regulatory Branch by [FUTURE DATE]. The restriction shall not be removed from the deed or modified without written approval of the USACE, and conveyance of any interest in the property must be subject to the deed restriction.

12.0 FINANCIAL ASSURANCES

The Permittee shall secure sufficient financial resources, considering inflation, to ensure compliance with the requirements of this document in the event that the Permittee is unable to remain compliant with the provisions of this mitigation plan. This financial assurance must be able to provide for perpetual maintenance of the mitigation plan, monitoring, reporting, and remedial actions that might be necessary. Site-specific considerations, such as the position of the mitigation area within the watershed, normal hydrology, soils, type and extent of site development activities proposed, and expected relative ease or difficulty of achieving the performance standards, may affect the size of the financial assurance. The Permittee shall obtain liability insurance, secure a performance bond, establish an escrow account or trust fund, or obtain some other form of financial assurance that is capable of achieving the above requirements and is suitable to the USACE and the coordinating agencies. As the Permittee achieves the performance standards established by this document, the size of the required financial assurance may be reduced if approved in writing by the USACE.

THIS PAGE INTENTIONALLY LEFT BLANK

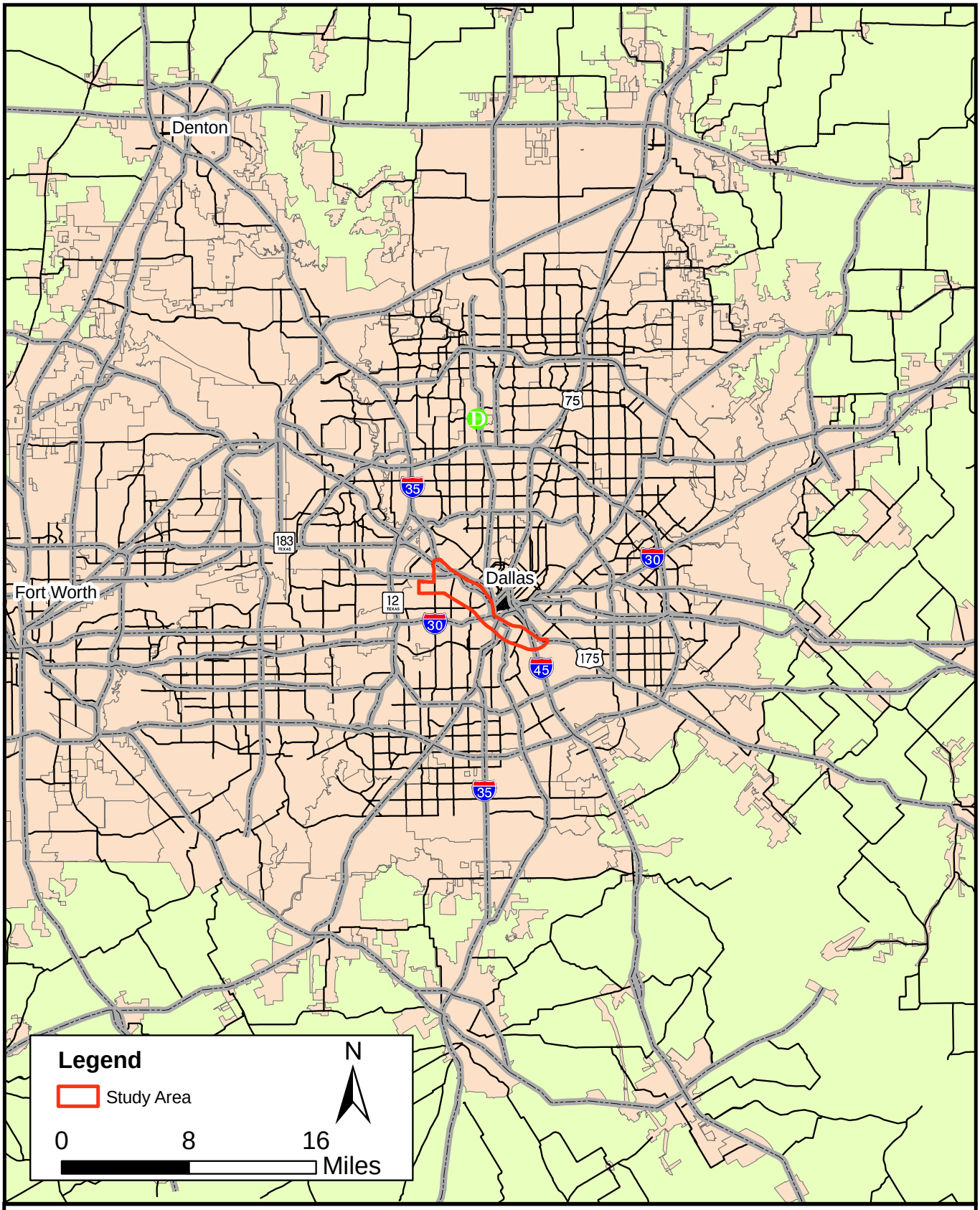

NTTA
NORTH TEXAS TOLLWAY AUTHORITY

Figure 1

Project Vicinity Map

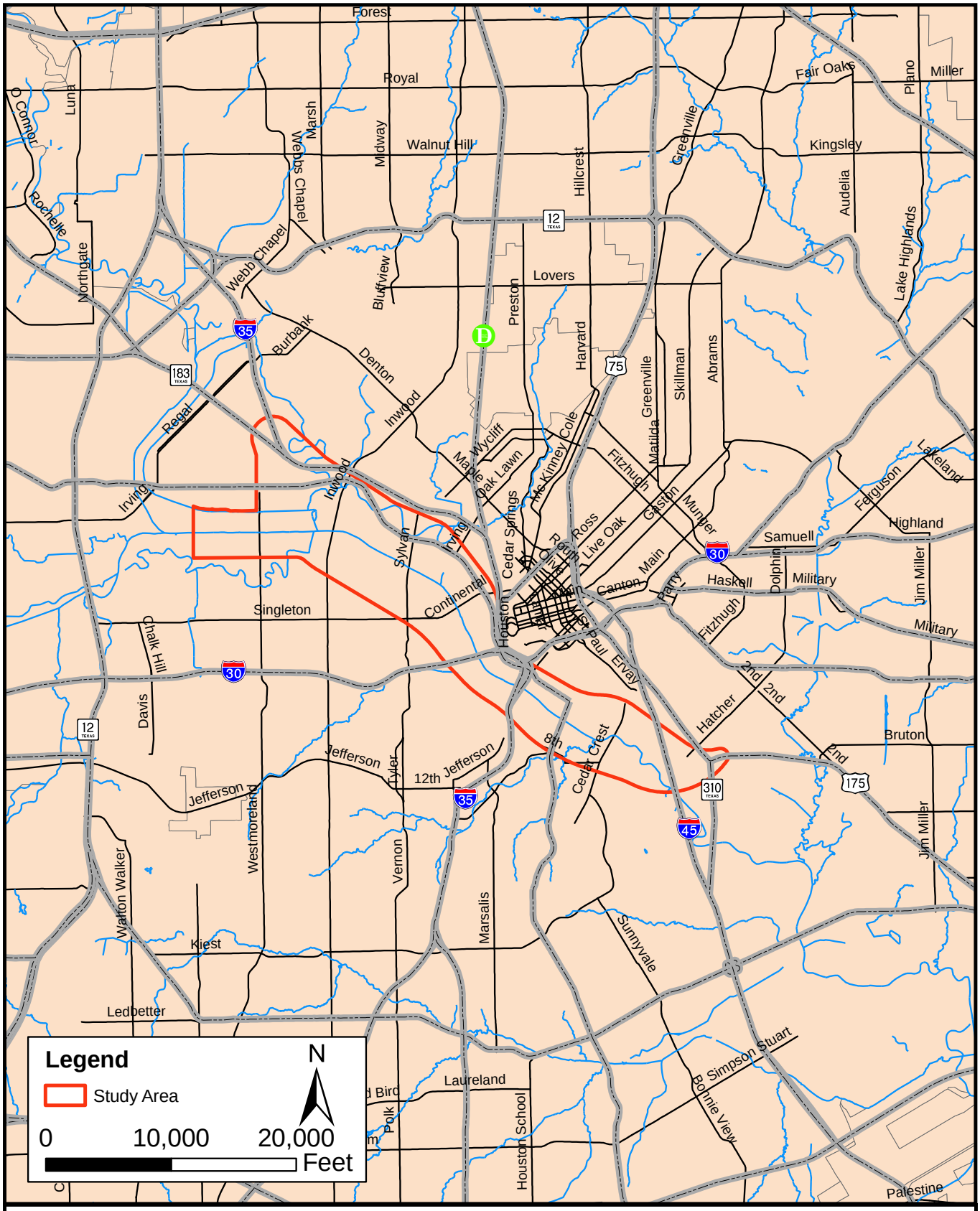

NTTA
NORTH TEXAS TOLLWAY AUTHORITY

Figure 2
Local Area Map

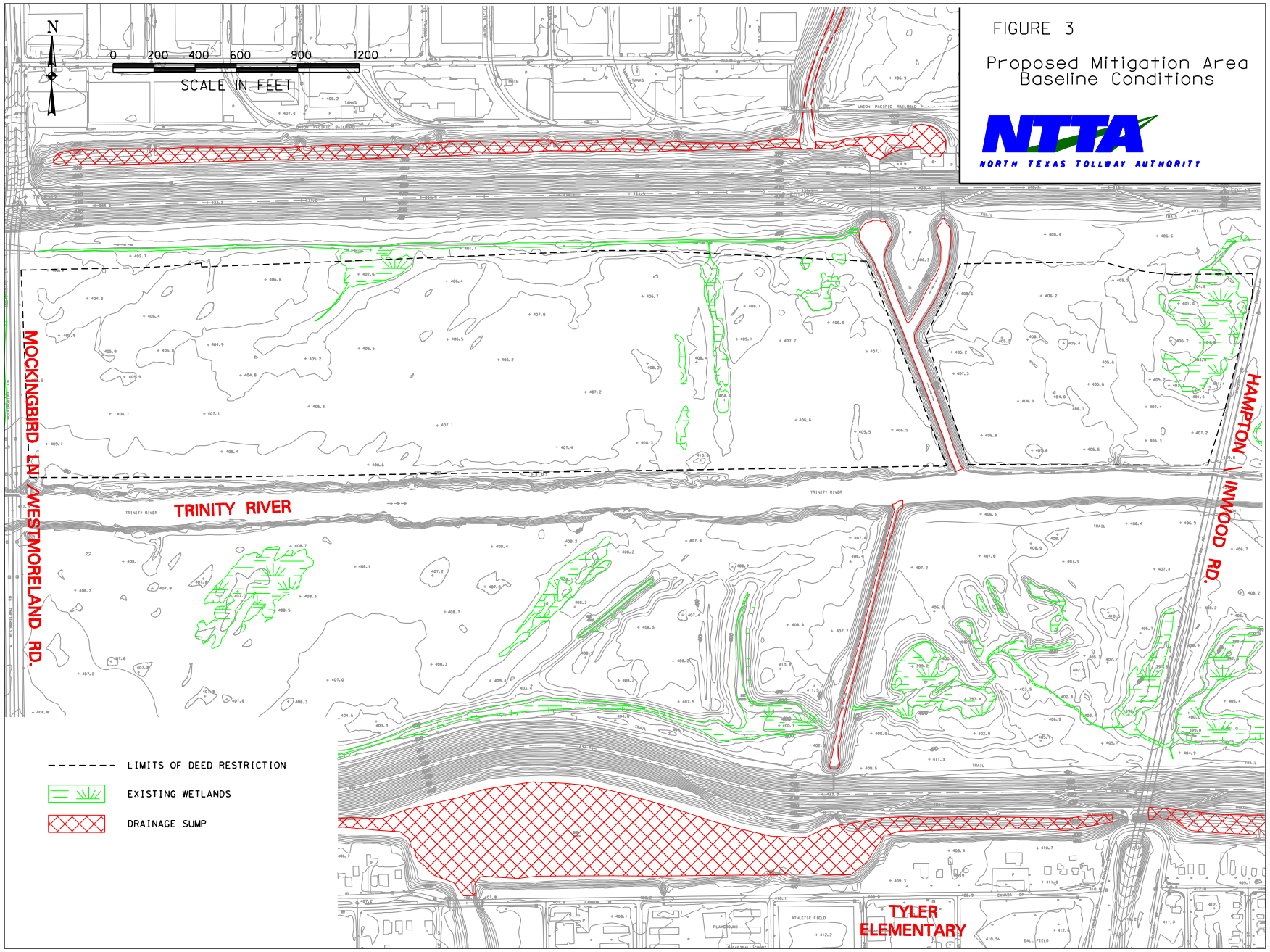
FIGURE 3
Proposed Mitigation Area
Baseline Conditions
NTTA
NORTH TEXAS TOLLWAY AUTHORITY
N
0 200 400 600 900 1200
SCALE IN FEET
MOCKINGBIRD LN / WESTMORELAND RD.
HAMPTON / INWOOD RD.
TRINITY RIVER
TYLER ELEMENTARY
LIMITS OF DEED RESTRICTION
EXISTING WETLANDS
DRAINAGE SUMP

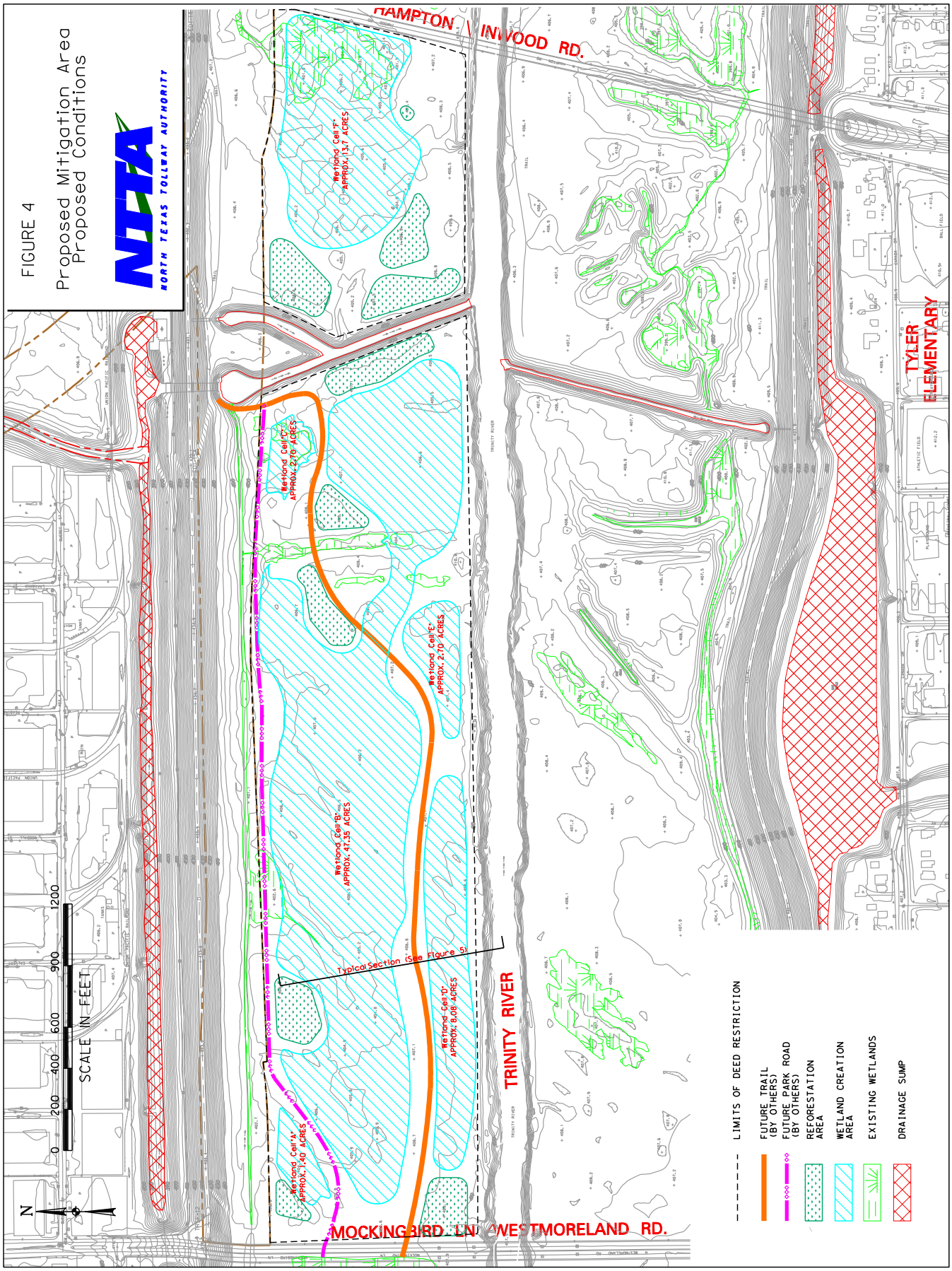
FIGURE 4
Proposed Mitigation Area
Proposed Conditions
NTTA
NORTH TEXAS TOLLWAY AUTHORITY
HAMPTON
INWOOD RD.
TYLER ELEMENTARY
TRINITY RIVER
MOCKINGBIRD LN
WESTMORELAND RD.
Wetland Cell "F" APPROX. 13.7 ACRES
Wetland Cell "C" APPROX. 2.70 ACRES
Wetland Cell "E" APPROX. 2.70 ACRES
Wetland Cell "B" APPROX. 47.35 ACRES
Wetland Cell "D" APPROX. 8.08 ACRES
Wetland Cell "A" APPROX. 1.40 ACRES
Typical Section (See Figure 5)
SCALE IN FEET
0
200
400
600
900
1200
N
LIMITS OF DEED RESTRICTION
FUTURE TRAIL (BY OTHERS)
FUTURE PARK ROAD (BY OTHERS)
REFORESTATION AREA
WETLAND CREATION AREA
EXISTING WETLANDS
DRAINAGE SUMP

FIGURE 5

Typical Cross Section

NTTA
NORTH TEXAS TOLLWAY AUTHORITY

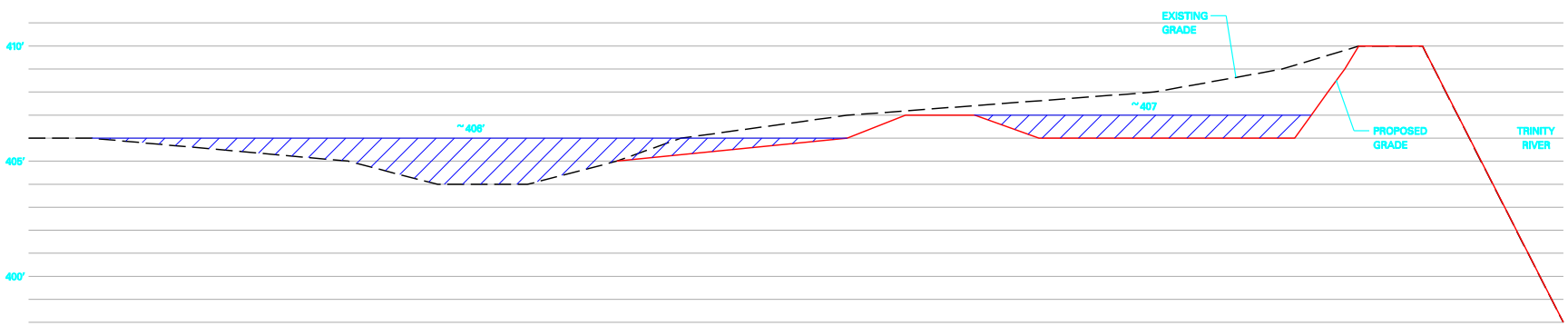

NOTES:

1. REPRESENTS TYPICAL CROSS SECTION. ELEVATIONS MAY VARY 1-2 FEET THROUGHOUT SECTION

2. HATCHED AREA DENOTES ANTICIPATED EXTENTS OF INUNDATION

FIGURE 6

Proposed Planting Plan

NTTA

NORTH TEXAS TOLLWAY AUTHORITY

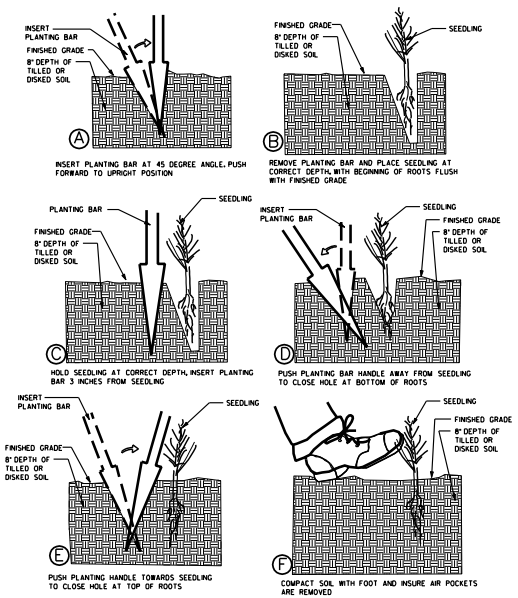

6 / 6.1 SEEDLING PLANTING DETAIL

SCALE: NOT TO SCALE

NOTES FOR DETAIL 1:

1. INSURE SLOT IN WHICH SEEDLING TO BE PLANTED IS DEEPER THEN THE LENGTH OF THE ROOT SYSTEM OF SEEDLING.

2. SEEDLINGS SHOULD BE DORMANT AND ROOTS SHOULD BE MOIST AND FIBROUS. THE ROOTS SHOULD NOT BE ALLOWED TO BECOME DRY.

3. THE FOLLOWING ERRORS SHOULD NOT OCCUR DURING PLANTING: TANGLED ROOTS, PLANTING TOO SHALLOW, PLANTING TOO DEEP, AIR POCKETS, TURNED UP ROOTS (J-ROOTING), AND PLANTING OVER ROCKS.

• INFORMATION FOR SEEDLING PLANTING OBTAINED FROM COARSEGOLD RESOURCE CONSERVATION DISTRICT, THE USDA NATIONAL RESOURCE CONSERVATION SERVICE, AND THE CALIFORNIA DEPARTMENT OF FORESTRY AND FIRE PROTECTION.
www.crcd.org/plantinstruct.html

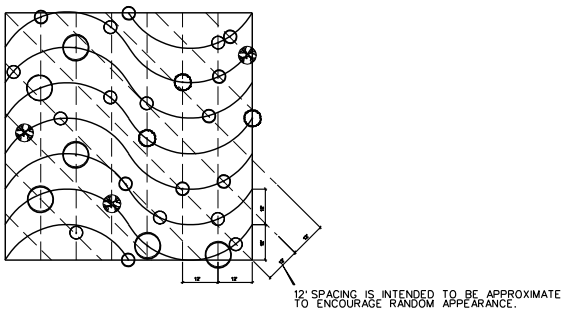

NOTES FOR DETAIL 2:

1. INSTALL TREE ANDD UNDERSTORY SEEDLING SPECIES IN RANDOM PATTERN AS SHOWN. PLANT MATERIALS TO BE PLANTED AT POINTS OF INTERSECTION WHERE LINES AND CURVES INTERSECT.

2. PLANT SPECIES AND QUANTITY TO VARY.

3. CONSTRUCTION CONTRACTOR TO INSTALL SEEDLINGS WITH THIS SPACING IN ZONES THAT CORRESPOND TO THE FOLLOWING PATTERNS.

6 / 6.2 PLANTING SPACING DETAIL

SCALE: NOT TO SCALE

PLANT LIST

QUANTITY	SCIENTIFIC NAME	COMMON NAME	CONDITION	SIZE	HEIGHT	SPACING	REMARKS
BARE ROOT SEEDLING TREES							
825	Quercus shumardii	SHUMARD OAK	BARE ROOT		2' MIN	RANDOM	
825	Quercus macrocarpa	BURR OAK	BARE ROOT		2' MIN	RANDOM	
825	Carya illinoensis	PECAN	BARE ROOT		2' MIN	RANDOM	
198	Platanus occidentalis	SYCAMORE	BARE ROOT		2' MIN	RANDOM	
198	Ulmus crassifolia	CEDAR ELM	BARE ROOT		2' MIN	RANDOM	
BARE ROOT SEEDLING UNDERSTORY							
198	Morus rubra	RED MULBERRY	BARE ROOT		2' MIN	RANDOM	
198	Ilex decidua	DECIDUOUS HOLLY	BARE ROOT		1' MIN	RANDOM	
SHORT GRASS NATIVE SEED MIX							
20.0% per lb.	Andropogon gerardii	BIG BLUESTEM					Disk existing soil to a minimum 4 inches. Apply seed mix at a rate of 45 pounds per acre. Rake seeds into soil. Install seed from Native American Seed or approved equal.
20.0% per lb.	Tripsacum dactyloides	EASTERN GAMAGRASS					
20.0% per lb.	Leptochloa dubia	GREEN SPRANGLETOP					
20.0% per lb.	Elymus canadensis	CANADIAN WILDRYE					
20.0% per lb.	Panicum virgatum	SWITCHGRASS					

APPENDIX K

STRUCTURAL DESIGN WORK RELATED TO NOVEMBER 2006 USACE CONSULTATION/GEOTECHNICAL AND OPERATIONS & MAINTENANCE WORKGROUP DOCUMENTATION

THIS PAGE INTENTIONALLY LEFT BLANK

Appendix K. Structural Design Work Related to November 2006 USACE Consultation/Geotechnical and Operations & Maintenance Workgroup Documentation

TABLE OF CONTENTS

Appendix K1. Structural Design Work Related to November 2006 USACE Consultation
Appendix K2. Geotechnical Workgroup Documentation
Appendix K3. Operations & Maintenance Workgroup Documentation

THIS PAGE INTENTIONALLY LEFT BLANK

APPENDIX K-1

STRUCTURAL DESIGN WORK RELATED TO NOVEMBER 2006 USACE CONSULTATION

THIS PAGE INTENTIONALLY LEFT BLANK

Trinity Parkway Retaining Wall Preliminary Design

Halff Associates, November 2006
Prepared By: Saman A. Aryana

Trinity Parkway is a proposed tollway located generally to the west of downtown Dallas, Texas. Parkway alternative alignments 3A, 3B and 4 are located within the Dallas Floodway and would require construction of retaining walls in some locations to support fill placement associated with the proposed US Army Corps of Engineers (USACE) expansion of the Floodway levees. These walls are on the levee side of the Parkway main lanes in the general vicinity of downtown Dallas, at locations where the lanes underpass existing bridges. The purpose of this design report is to prepare a preliminary structural analysis for the proposed retaining walls in compliance with USACE design manuals and guidance documents. Three representative locations have been chosen for this analysis at the low points of the proposed northbound main lanes of Alts 3A, 3B and 4 under existing bridges at: 1) Woodall Rogers Freeway Extension (proposed), 2) North Corinth Street, and 3) Commerce Street.

All the pertinent design USACE documents were downloaded and used in the analysis. The following is the text of an email sent to Halff Associates by Ms. Anita Branch with USACE that entails the pertinent design documents.

"Per our discussions of this afternoon, attached is a list of design standards used by the Corps. This is not the full list, just some of the most frequently used manuals and regulations associated with flood control projects. Other applicable engineering manuals and engineering regulations cited in the AEIM or these standards are incorporated by reference. "

EM 1110-1-1804. Geotechnical Investigations
EM 1110-1-1904. Settlement Analysis
EM 1110-1-1905. Bearing Capacity of Soils
EM 1110-1-1906. Soil Sampling
EM 1110-1-2908. Rock Foundations
EM 1110-1-3500. Chemical Grouting
EM 1110-2-1901. Seepage Analysis & Control for Dams
EM 1110-2-1902. Stability of Earth & Rockfill Dams
EM 1110-2-1906. Laboratory Soils Testing
EM 1110-2-1908. Instrumentation of Embankment Dams & Levees
EM 1110-2-1911. Construction Control for Earth and Rock-Fill Dams
EM 1110-2-1913. Design and Construction of Levees
EM 1110-2-2000. Concrete for Civil Works Structures
EM 1110-2-2006. Roller Compacted Concrete
EM 1110-2-2007. Concrete Lined Flood Control Channels
EM 1110-2-2200. Gravity Dam Design
EM 1110-2-2302. Construction with Large Stone
EM 1110-2-2502. Retaining and Flood Walls

EM 1110-2-2504. Design of Sheet Pile Walls
EM 1110-2-2906. Design of Pile Foundations
EM 1110-1-2908. Rock Foundations
EM 1110-1-3500. Chemical Grouting
EM 1110-2-6050. Response Spectra & Seismic Analysis - Concrete Structures

ER 1110-1-261. Quality Assurance of Laboratory Testing Procedures
ER 1110-1-1807. Procedures for Drilling in Earth Embankments
ER 1110-1-8100. Laboratory Investigations and Testing
ER 1110-2-1806. EQ Design & Evaluation for Civil Works Projects
ER 1110-2-8152. Temporary Cofferdams & Braced Excavations
ETL 1110-2-569. Design Guidance for Levee Underseepage
SWD-AEIM. Architectural & Engineering Instructions Manual
TM 5-822-5. Pavement Design, Roads, Streets, Walks & Open Storage Areas

Copies of these manuals may be downloaded from the following websites:

http://www.usace.army.mil/inet/usace-docs/
http://www.army.mil/usapa/eng/

The USACE design manuals that are directly relevant to the structural analysis and design of the retaining walls are as follows:

- EM 1110-2-2502. Retaining and Flood Walls
- TM 5-818-1. Soils and Geology Procedures for Foundation Design of Buildings and Other Structures (Except Hydraulic Structures)
- SWD-AEIM. Architectural & Engineering Instructions Manual

The structural integrity of the retaining walls was investigated according to TM 5-818-1. The factors of safety used in the preliminary design for overturning, sliding, and bearing capacity were 1.5, 2, and 3, respectively. Settlement and tilting was not a major concern and would have to be investigated once the design is in its final stage.

Terracon Consulting Engineers were hired to provide Halff Associates with appropriate geotechnical properties of the soil. Terracon was also responsible for the investigation of the Deep-seated failure criterion as outlined in the USACE design manuals. The following is the text of an email sent to Halff Associates by Tim Abrams with Terracon that provides design recommendations.

"The following design parameters are recommended for evaluating the structural design of the wall. At-rest earth pressure for 4H:1V back slope undrained conditions equivalent fluid pressure 125 pcf and for drained conditions a equivalent fluid pressure of 90 pcf. These pressures are based on clay backfill with Plasticity Index (PI) between 25 and 35 and design unfactored friction angle of 24 degrees. Ultimate sliding resistance coefficient on retained side of key for soil on concrete 0.36. Passive resistance

on river side of key ultimate equivalent fluid pressure 72 pcf. Factor of safety respect to sliding 1.5. Allowable bearing pressure 1,700 psf, which includes factor of safety of 3. Force resultant should fall within middle third of foundation to maintain 100 percent of base area in compression. We will evaluate overall stability and check sliding stability once the lengths of the wall bases have been initially sized."

Several different wall geometries were investigated as directed by Martin Molloy (Halff Associates, President). A typical cross section of the retaining wall that satisfied the design requirements and seemed to be geometrically appropriate for the three crossings in question was developed and sent to Tim Abrams with Terracon for further investigation. A typical retaining wall cross section that could be used for the promenade area was similarly developed and sent to Mr. Abrams for further investigation.

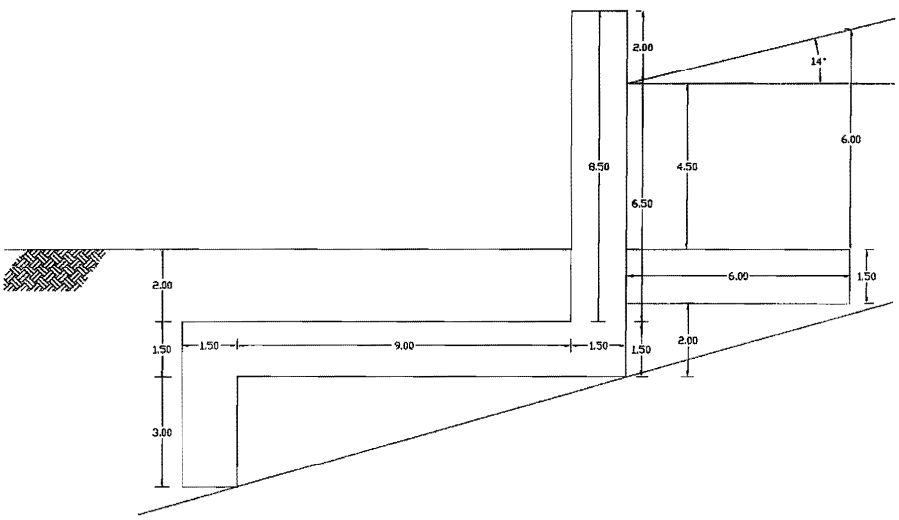

Figure 1: Typical Retaining Wall Cross Section for the Three Crossings

The primary objective of the geometry of the cross sections was to avoid cutting into the existing levee. Thus, the cross section in Figure 1 shows a heel that is offset from the remaining portion of the footing. If cutting into the existing levee is allowed, the cross section shown in Figure 2 can be used. The typical cross section developed for the walkway area is shown in Figure 3. According to Tim Abrams, the retaining walls presented in Figures 1 and 3 meet the deep-seated failure requirement with factors of safety over 1.5.

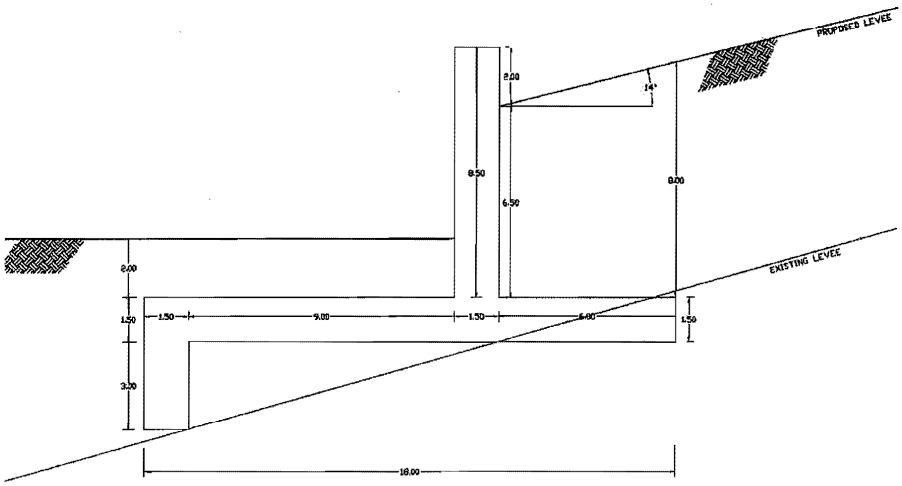

Figure 2: Typical Retaining Wall Cross Section for the Three Crossings

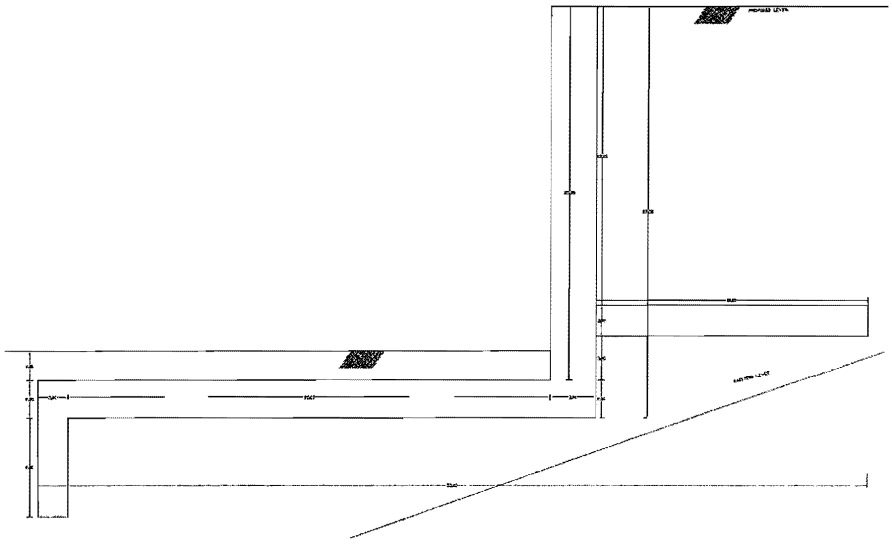

Figure 3: Typical Retaining Wall Cross Section for the Promenade

There was a meeting between USACE, NTTA, City of Dallas, Terracon, and Halff Associates on Friday 11/3/2006 in the Federal Building in Downtown Fort Worth, Texas. The following people attended the meeting:

Table 1: List of Friday 11/3/2003 Meeting Attendees, Extracted from the Sign-In Sheet

Name	Representing
Anita Branch	CESWF-EC-DG
Ching Hang Wong	CESWF-OC
Kevin Craig	CESWF-PM-C
Gene Rice	CESWF-PM-C
Saman Aryana	Halff Associates
Matt Craig	Halff Associates
Chris Anderson	NTTA
Martin Molloy	Halff Associates
Tim Abrams	Terracon
Les Perrin	CESWF-EC-DG
Greg Ajemian	City of Dallas
John Van Leevwen	CESWF-OD-TM
Mark Sissom	CESWF-OD-TM
Billy Colbert	CESWF-PER-EE

During the meeting, the proposed retaining wall cross sections were presented to the attendees. The cross sections as presented are shown in Figure 4. Additionally, an alternative alignment of the roadway was presented that would avoid the existing and the proposed levees by relocating the Parkway main lanes of Alts 3A, 3B and 4 further away from the levee slopes. (i.e. the initial version of Alts 3C and 4B.) Thus, it would eliminate the need for the subject retaining walls. The USACE staff present showed preference for the relocated roadway instead of the current location roadway with fill walls. This report nevertheless documents the design work prior to the meeting.

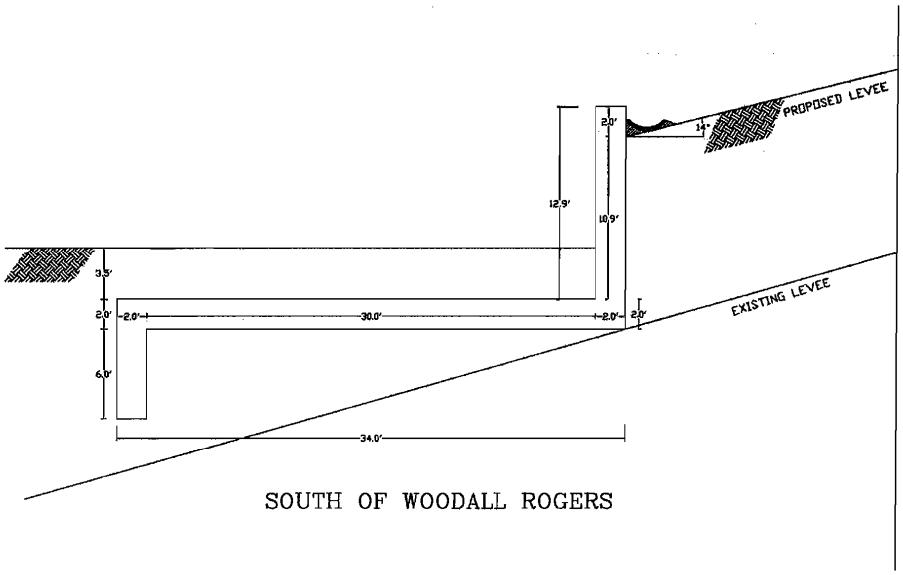

SOUTH OF WOODALL ROGERS

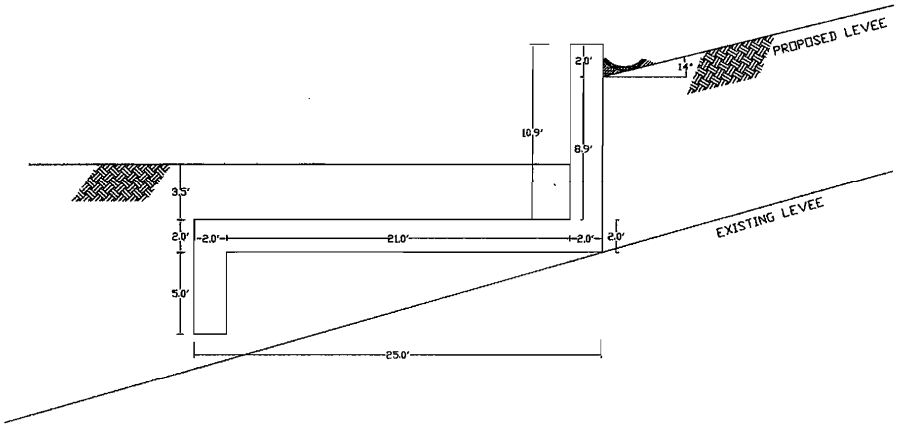

NORTH OF COMMERCE STREET

Figure 4: Retaining Wall Cross Sections Presented In the 11/3/2006 Meeting

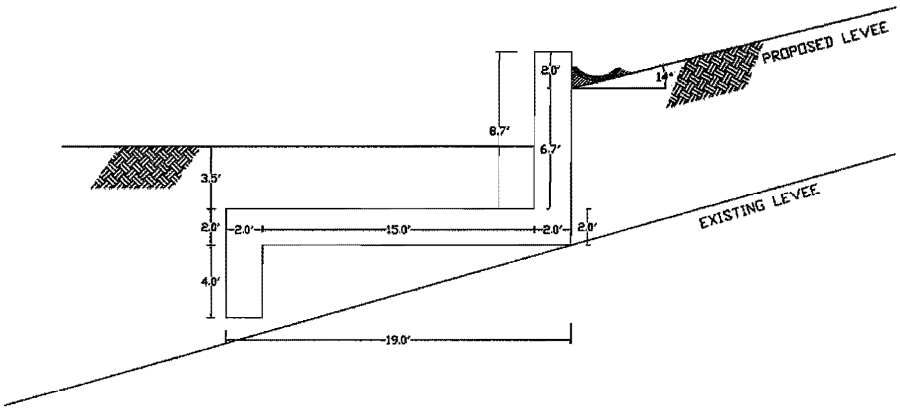

SOUTH OF NORTH CORINTH STREET

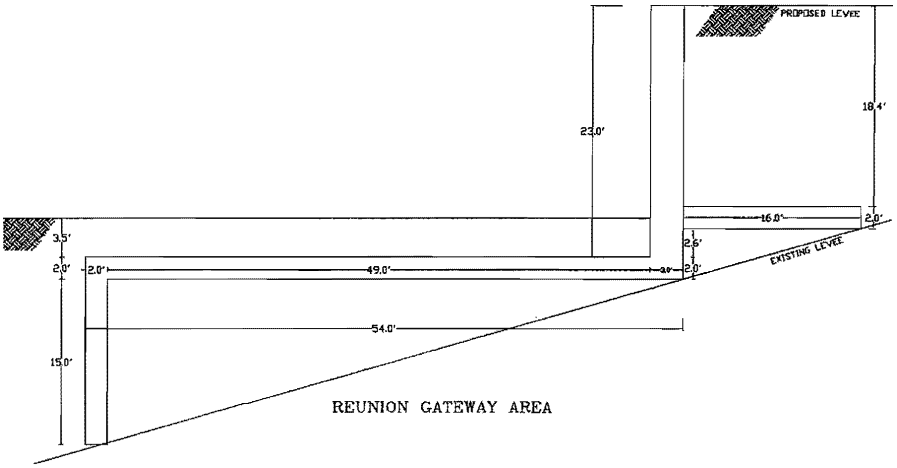

REUNION GATEWAY AREA

Cont. Figure 4: Retaining Wall Cross Sections Presented In the 11/3/2006 Meeting

Terracon
Consulting Engineers & Scientists

Terracon Consultants, Inc.
8901 Carpenter Freeway Suite 100
Dallas, Texas 75247
Phone 214.630.1010
Fax 214.630.7070
www.terracon.com

December 15, 2006

Mr. Stan R. Caldwell, P.E.
Vice President
Halff Associates, Inc.
8616 Northwest Plaza Drive
Dallas, TX 75225-4292

Phn: 214-346-6280
Fax: 214-739-0095

Re: Geotechnical Engineering Report
Preliminary Flood Wall Stability Analyses
Trinity Parkway Project
Dallas, Texas
Terracon Project No. 94065322

Dear Mr. Caldwell:

This report presents our geotechnical recommendations and analyses for preliminary evaluation of retaining walls abuting the Northeast Levee of the Trinity River. The work was completed in general accordance with our proposal dated September 11, 2006.

Project Information

Concrete retaining walls are envisioned to be required to allow construction of the Trinity Parkway where it crosses under a number of bridges. The walls will retain future levee fill that may be placed to raise the existing levees. The wall heights may range from less than 4 feet to 25 feet. The walls will be constructed on new roadway embankment fill. The roadway embankment fill may range from 5 to 10 feet thick. The top of the wall may be below the 100-year flood elevation. The levee will be raised with 4 Horizontal to 1 Vertical (4H:1V) slopes extending from the retaining walls to the crest of the levee.

Three U.S. Army Corps of Engineers engineering manuals were used to develop preliminary geotechnical recommendations for design of cast-in-place concrete retaining walls. These manuals are listed below:

- Retaining and Flood Walls, EM 1110-2-2502, September 29, 1989.
- Design and Construction of Levees, EM 1110-2-1913, April 30, 2000.
- Slope Stability, EM 1110-2-1902, October 31, 2003.

The scope of this study is limited to providing preliminary wall design parameters and estimating the global stability of the levee retaining wall to investigate the feasibility of levee retaining walls.

Delivering Success for Clients and Employees Since 1965
More Than 70 Offices Nationwide

Expected Subsurface Conditions

Boring and Laboratory Data

Lateral earth pressures and global stability analyses for retaining wall design were based on soils data obtained from the Army Corps of Engineers. The Corps of Engineers drilled five borings at the levee crest and toe of the Northeast Levee. The approximate locations of the borings designated 8A4C-629, 84AC-630, 8A2S-631, 8A4C-632, and 8A2S-633 are shown on Figure 1. The results of laboratory tests performed by the Corps of Engineers are presented on Figures 2 through 5. Test results include soil natural moisture contents, Atterberg Limits, dry density, undrained compressive strength, and drained direct shear strength. The variations in soil Liquid Limits and Plasticity Indices (PI) are shown on Figure 6.

Subsurface Conditions

The Corps of Engineers borings indicate that high plasticity clays are present in the levee. The levee clays had Liquid Limits ranging from 55 to 88 percent with PI's ranging from 36 to 62. The average Liquid Limit was 74 percent and the average PI was 51. Strength tests indicate the clays have a very stiff to hard consistency below the crest of the levee.

The clays below the levee to depths on the order of 20 feet below the toe of the levee consisted of high plasticity clays. These foundation clays exhibited Liquid Limits ranging from 50 to 91 percent and PI's ranging from 32 to 65. The average Liquid Limit was 72 and average PI was 49. These clays exhibited a stiff to very stiff consistency.

Lean clays with moderate plasticity and silty to clayey sands underlay the highly plastic natural clays. The lean clays exhibited Liquid Limits ranging from 23 to 43 percent and PI's ranging from 6 to 25. The consistency of the lean clays ranged from medium stiff to stiff.

The Trinity River soil deposits are underlain by shale of the Eagle Ford Formation. The shale was present at depths ranging from 40 to 60 feet below the toe of the levee.

Design Soil Strengths

Soil strengths for lateral earth pressure and global stability analyses were based on Corps of Engineer empirical correlations between effective friction angles and PI. The variation of effective friction angle and soil PI is shown on Figure 7. Direct shear measured values from soil samples obtained from the Northeast Levee are also shown on this plot. The range of effective cohesion values for the Northeast Levee soils are presented on Figure 8.

The soils placed behind the retaining walls to construct the levee to 4H:1V slopes and the roadway fill soils were assumed limited to clays with a PI of 35 or less. For a PI of 35, a design effective angle of friction of 24 degrees was selected from Figure 7.

A design PI of 50 was used to select design values for the levee, foundation, and Trinity Parkway roadway embankment soils. A PI of 50 represents an average value of the tests

performed by the Corps of Engineer. Based on Figure 7, a design effective friction angle of 20 degrees was selected for design. A cohesion value of 50 psf was assigned to the existing levee fill. A cohesion value of 200 psf was assigned to the foundation soils. These cohesion values are lower bounds to the values measured by the Corps of Engineers as can be observed on Figure 8.

The average total unit weight of the levee and foundation soils is about 122 pcf. A design soil total unit weight of 125 pcf is recommended for design.

Lateral Earth Pressures

The Corps of Engineers' Retaining Wall and Flood Wall manual specifies that at-rest earth pressures be used for design. The at-rest earth pressures were computed based on Jaky's relationship for a level back fill and drained conditions. Sliding wedge analyses were performed to calculate at-rest coefficients for undrained conditions and a level back slope. Sliding wedge analyses were used to compute the at-rest earth forces for a sloping wall backfill. A Strength Mobilization Factor of 2/3 was used with a soil friction angle of 24 degrees to compute the at-rest soil forces for a sloping backfill. Recommended lateral earth pressures for preliminary proportioning of the retaining walls are presented in Table 1.

TABLE 1 – AT-REST LATERAL EARTH PRESSURE COEFFICIENTS

Wall Backfill Slope	At-Rest Pressure Coefficient Drained Conditions	At-Rest Pressure Coefficient Undrained Conditions
4H:1V	0.72	1.0
Level	0.59	0.77

Bearing Resistance

The retaining walls will be supported on roadway embankment fill. The fill was assumed to consist of clays with a PI of 35 or less. An undrained shear strength of 1,000 psf was used for bearing capacity design calculations. Experience indicates that this shear strength is typical of clays placed wet of optimum by 2 to 3 percentage points.

An allowable net bearing pressure of 1,700 psf is recommended for preliminary design of the retaining wall foundation. This allowable bearing pressure includes a factor of safety of 3.

Sliding Resistance

The sliding resistance of the wall will be mobilized by shearing resistance along the base of the wall and passive resistance in front of the key wall. An ultimate coefficient of sliding resistance of 0.36 is recommended along the base of the wall on the retained earth side of the wall key.

Terracon

Passive resistance was computed using log spiral solutions by Shields and Tolunay for level ground in front of the retaining wall key wall. The passive resistance was computed assuming no wall soil friction and a soil effective friction angle of 24 degrees. A passive coefficient of 2.3 was obtained from the Shield and Tolunay chart. A passive coefficient of 1.15 is recommended for design to meet the requirements given in the Corps of Engineers Retaining and Flood Wall manual. The manual does not recommend using a passive coefficient greater than ½ half of the computed passive coefficient. Buoyant soil unit weights should be used in the sliding stability analyses. The wall should have a factor of safety of at least 1.5 with respect to sliding.

Global Stability Analyses

Global stability analyses were performed for a 9 foot high retaining wall near the Woodall Rogers Bridge and for a 27.5 foot high wall planned for the Overlook. The wall geometry, soil strengths, and groundwater conditions used for the stability analyses are shown on Figures 9 and 10.

The slope stability analyses were performed using the slope stability analysis program Slide developed by Rocscience. The shearing surfaces with the lowest computed factor of safety using Spencer's method are shown on Figures 9 and 10. The computed factors of safety are greater than 1.5, which is the minimum acceptable factor of safety. These analyses indicate that the retaining walls would have an adequate factor of safety with respect to global stability.

General Comments

The recommended soil design values and global stability analyses are preliminary and intended to allow the feasibility of the retaining walls to be accessed. These recommendations should not be used for final design of the retaining walls. Borings, laboratory tests, and engineering analyses should be performed to develop final wall design recommendations.

Closure

If there are any questions, please contact us.

Sincerely,

Terracon Consultants, Inc.

Ranasinghege (Jay) Jayatilaka, Ph.D., P.E.
Project Manager

Tim G. Abrams, P.E.
Manager, Geotechnical Services

STATE OF TEXAS
TIM G. ABRAMS
40223
REGISTERED PROFESSIONAL ENGINEER

FIGURES

Figures

Corps of Engineers Boring Locations ---------- 1
Corps of Engineers Laboratory Test Results ---------- 2 to 5
Liquid Limits Versus Plasticity Indices ---------- 6
Effective Friction Angle Correlations ---------- 7
Effective Cohesion Correlations ---------- 8
Global Stability Analyses of Wall Near Woodall Rogers ---------- 9
Global Stability Analyses Overlook Wall ---------- 10

Terracon

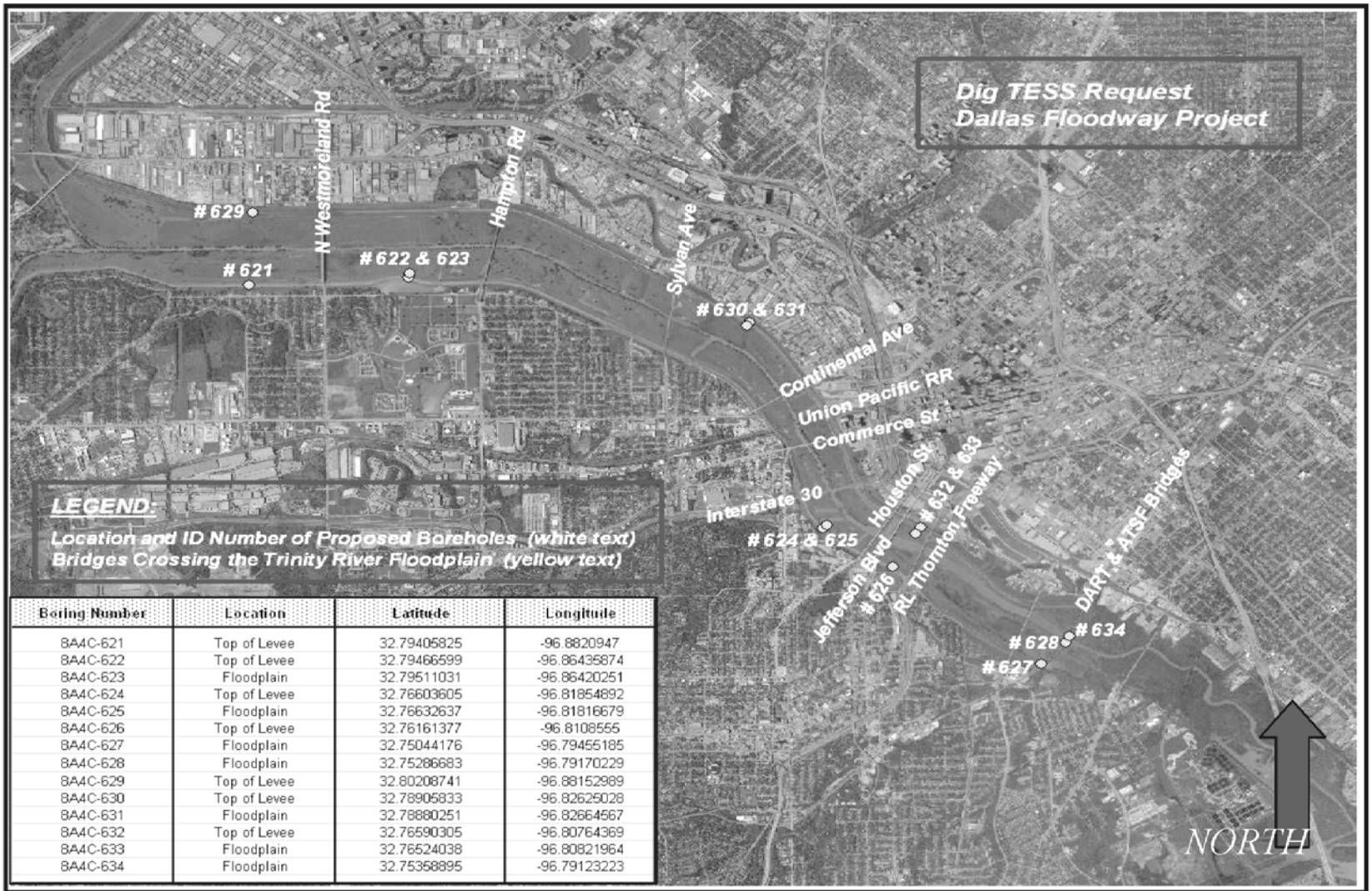

Boring Number	Location	Latitude	Longitude
8A4C-621	Top of Levee	32.79405825	-96.8820947
8A4C-622	Top of Levee	32.79466599	-96.86435874
8A4C-623	Floodplain	32.79511031	-96.86420251
8A4C-624	Top of Levee	32.76603605	-96.81854892
8A4C-625	Floodplain	32.76632637	-96.81816679
8A4C-626	Top of Levee	32.76161377	-96.8108555
8A4C-627	Floodplain	32.75044176	-96.79455185
8A4C-628	Floodplain	32.75286683	-96.79170229
8A4C-629	Top of Levee	32.80208741	-96.88152989
8A4C-630	Top of Levee	32.78905833	-96.82625028
8A4C-631	Floodplain	32.78880251	-96.82664567
8A4C-632	Top of Levee	32.76590305	-96.80764369
8A4C-633	Floodplain	32.76524038	-96.80821964
8A4C-634	Floodplain	32.75358895	-96.79123223

CORPS OF ENGINEERS BORING LOCATIONS
TRINITY PARKWAY LEVEE
DALLAS, TEXAS

Terracon

Terracon Job No. 94065322

FIGURE 1

NORTHEAST LEVEE										
Sample Depth (feet)	Material Type	Natural Moisture Content (W_c)	Atterberg Limits			Dry Density (pcf)	Undrained Strength		Drained Strength (Direct Shear)	
			LL	PL	PI		Q (tsf)	Strain at Failure (%)	c' (tsf)	ϕ'
Borehole 8A4C-629, Approximate Station 372± (Levee Crest, near centerline)										
2 - 4	CH	23.7	71	24	47	-----	-----	-----	-----	-----
7 - 9	CH	23.5	74	22	52	-----	-----	-----	-----	-----
12 - 14	CH	18.2	65	22	43	108.3	6.931	2	-----	-----
17 - 19	CH	22.8	85	26	59	99	8.656	2.2	0.1	20.1
25 - 27	CH	24.5	88	26	62	-----	-----	-----	-----	-----
35 - 37	CH	22	79	22	57	102.8	6.56	8.5	0.52	11.7
45 - 47	CH	28.1	67	21	46	94.6	1.758	4.4	0	20.1
55 - 57	CL-CH	24.2	50	18	32	99.1	1.778	5.5	0.19	18.5
65 - 67	SM	18.7	Non-Plastic			106.4	6.166	4.5	0	35.3
75 - 77	SM	7.1	-----	-----		-----	-----	-----	-----	-----
80 - 82	Shale	18	68	34	34	-----	-----	-----	-----	-----
82 - 88.5	Shale	14.7	78	36	42	113.4	22.15	1.3	-----	-----
88.5 - 93.4	Shale	21.5	72	32	40	105.4	14.89	0.9	-----	-----

Table 1A. Northeast Levee - Summary of Test Results, Embankment and Foundation Materials [USACE, 2004]

FIGURE 2

Sample Depth (feet)	Material Type	Natural Moisture Content (W_c)	Atterberg Limits			Dry Density (pcf)	Undrained Strength		Drained Strength (Direct Shear)	
			LL	PL	PI		Q (tsf)	Strain at Failure (%)	c' (tsf)	ϕ'
Borehole 8A4C-630, Approximate Station 196± (Levee Crest, near centerline)										
2 - 4	CH	20.3	----	----		-----	-----	-----	-----	-----
7 - 9	CH	19.4	75	25	50	-----	-----	-----	-----	-----
12 - 14	CH	22.7	71	23	48	103.9	3.592	5.1	-----	-----
17 - 19	CH	22.7	81	23	58	-----	-----	-----	-----	-----
25 - 27	CH	24.5	78	25	53	-----	-----	-----	-----	-----
35 - 37	CH	29.9	86	23	63	90.4	3.105	3	0.08	17.1
45 - 47	CH	23.4	57	19	38	102	2.319	11.1	0.33	15.9
55 - 57	SM-SC	20.4	23	17	6	-----	-----	-----	-----	-----
65 - 67	Shale	20.3	60	26	34	102.9	-----	-----	-----	-----
67.25 - 71	Shale	18.1	63	24	39	108.5	11.48	3.2	-----	-----
78.5 - 79	Shale	-----	----	----		-----	-----	-----	-----	-----
Borehole 8A2S-631, Approximate Station 196± (Floodplain, near Levee Toe)										
2 - 4	CH	17.7	84	26	58	-----	-----	-----	-----	-----
7 - 9	CH	19.6	77	25	52	-----	-----	-----	-----	-----
12 - 14	CH	25.9	70	26	44	98.2	1.611	4.2	-----	-----
17 - 19	CH	21	68	22	46	-----	-----	-----	-----	-----
24 - 26	CL	16.7	33	14	19	-----	-----	-----	-----	-----
31 - 33	CL	19.6	26	14	12	-----	-----	-----	-----	-----
38 - 40	Shale	17.1	59	24	35	-----	-----	-----	-----	-----

Table 1B. Northeast Levee - Summary of Test Results, Embankment and Foundation Materials [USACE, 2004]

FIGURE 3

Sample Depth (feet)	Material Type	Natural Moisture Content (W_c)	Atterberg Limits			Dry Density (pcf)	Undrained Strength		Drained Strength (Direct Shear)	
			LL	PL	PI		Q (tsf)	Strain at Failure (%)	c' (tsf)	ϕ'
Borehole 8A4C-632, Approximate Station 92± (Levee Crest, near centerline)										
2 - 4	Shale	16.6	69	22	47	-----	-----	-----	-----	-----
7 - 9	CH	18.2	72	22	50	-----	-----	-----	-----	-----
12 - 14	CH	17.9	55	19	36	112.9	4.648	15	-----	-----
17 - 19	CH	24.4	75	23	52	95.6	3.827	1.4	-----	-----
25 - 27	CH	28.9	80	26	54	90.9	3.376	4.5	0.38	15
35 - 37	CH	29.5	82	23	59	89.9	3.097	2.6	0	19.3
45 - 47	CH	26.6	63	21	42	95	2.973	6.6	0.09	19.5
55 - 57	CL	23.7	39	15	24	100.3	1.19	6.1	0.07	22.4
65 - 67	CL	23.9	35	16	19	101	0.597	2	-----	-----
85.6 - 87	Shale	19.2	68	28	40	109.1	12.46	4.6	-----	-----

Table 1C. Northeast Levee - Summary of Test Results, Embankment and Foundation Materials [USACE, 2004]

FIGURE 4

Sample Depth (feet)	Material Type	Natural Moisture Content (W_c)	Atterberg Limits			Dry Density (pcf)	Undrained Strength		Drained Strength (Direct Shear)	
			LL	PL	PI		Q (tsf)	Strain at Failure (%)	c' (tsf)	ϕ'
Borehole 8A2S-633, Approximate Station 92± (Floodplain, near Levee Toe)										
2 - 4	CH	22.7	68	22	46	-----	-----	-----	-----	-----
7 - 9	CH	34.1	91	26	65	-----	-----	-----	-----	-----
12 - 14	CH	30.2	67	21	46	93.3	0.961	3.2	-----	-----
17 - 18.6	CH	25.9	69	23	46	-----	-----	-----	-----	-----
24 - 25.6	CL	20.6	39	15	24	-----	-----	-----	-----	-----
31 - 33	CL	21.7	36	16	20	-----	-----	-----	-----	-----
38 - 40	CL	20.7	43	18	25	-----	-----	-----	-----	-----
43 - 43.6	SP-SM	20.3	Non-Plastic			-----	-----	-----	-----	-----
43.6 - 44.6	CL	20	38	18	20	-----	-----	-----	-----	-----
48 - 49.5	CL	10.9	43	19	24	-----	-----	-----	-----	-----
54 - 55.5	Shale	18.2	66	28		-----	-----	-----	-----	-----

Table 1D. Northeast Levee - Summary of Test Results, Embankment and Foundation Materials [USACE, 2004]

FIGURE 5

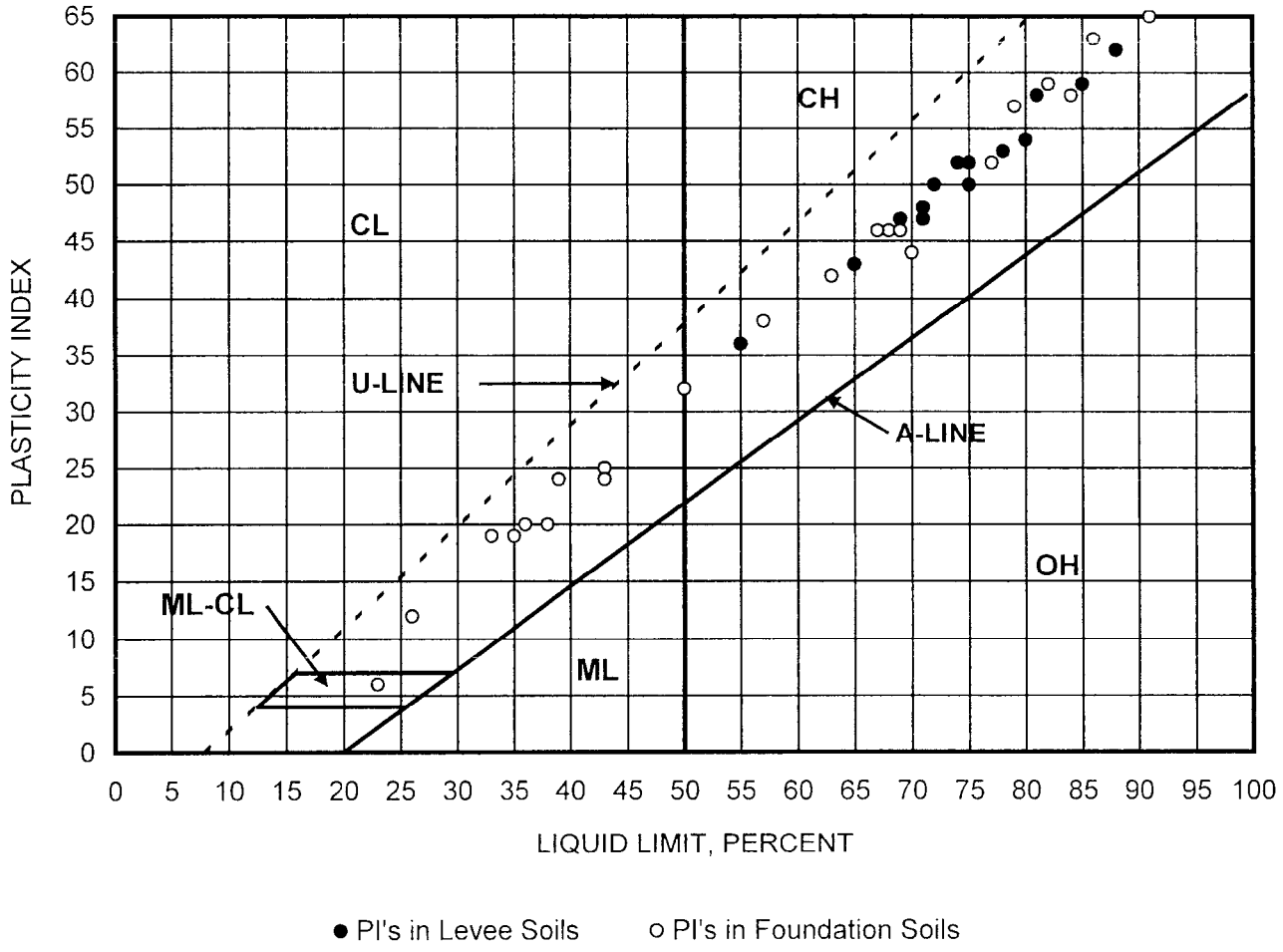

LIQUID LIMITS VS. PLASTICITY INDICES
NORTHEAST LEVEE OF TRINITY RIVER
DALLAS, TEXAS

Terracon
Terracon Job No. 94065322

FIGURE 6

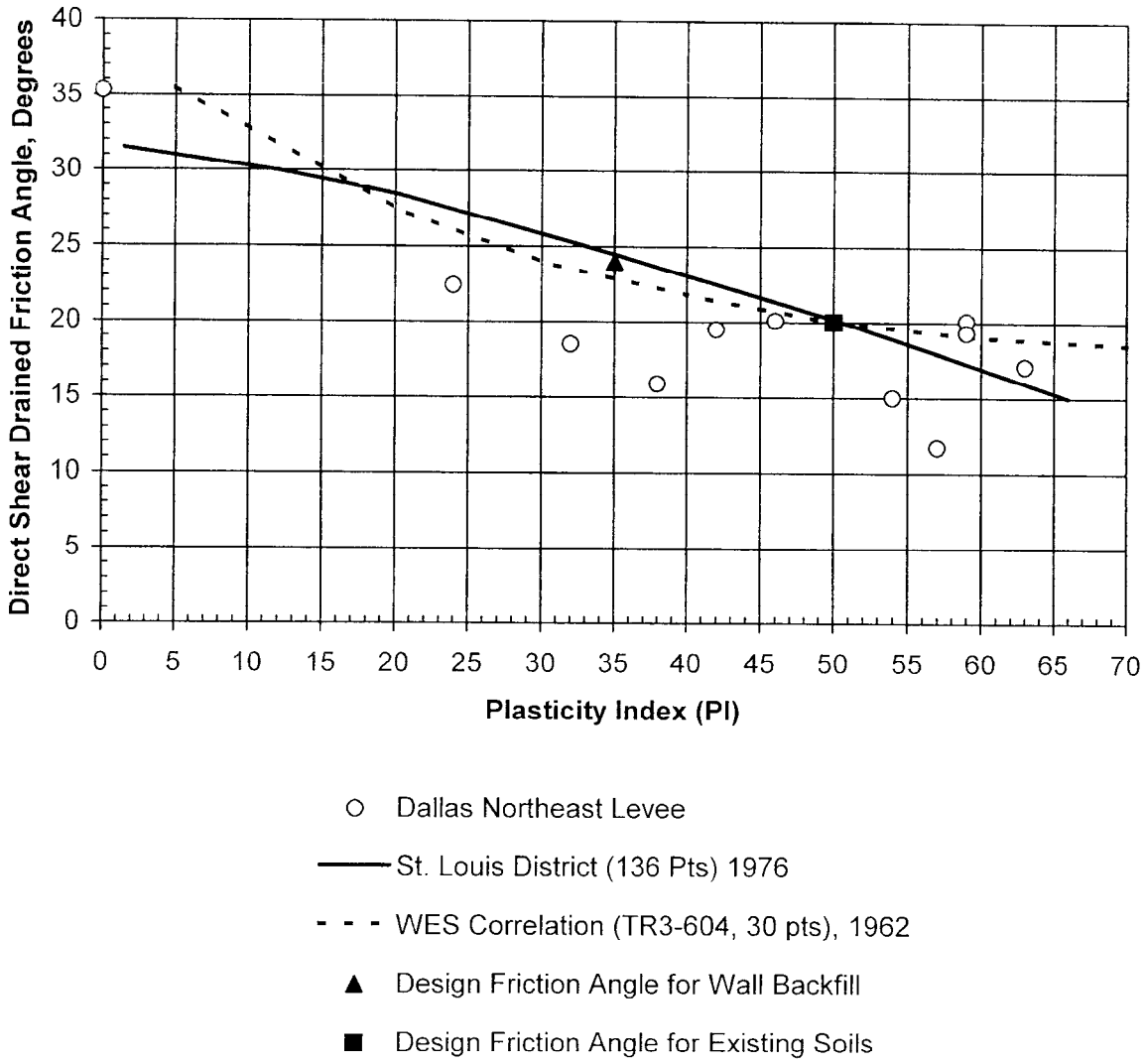

EFFECTIVE FRICTION ANGLE CORRELATIONS
TRINITY PARKWAY NORTHEAST LEVEE
DALLAS, TEXAS

Terracon
Terracon Job No. 94065322

FIGURE 7

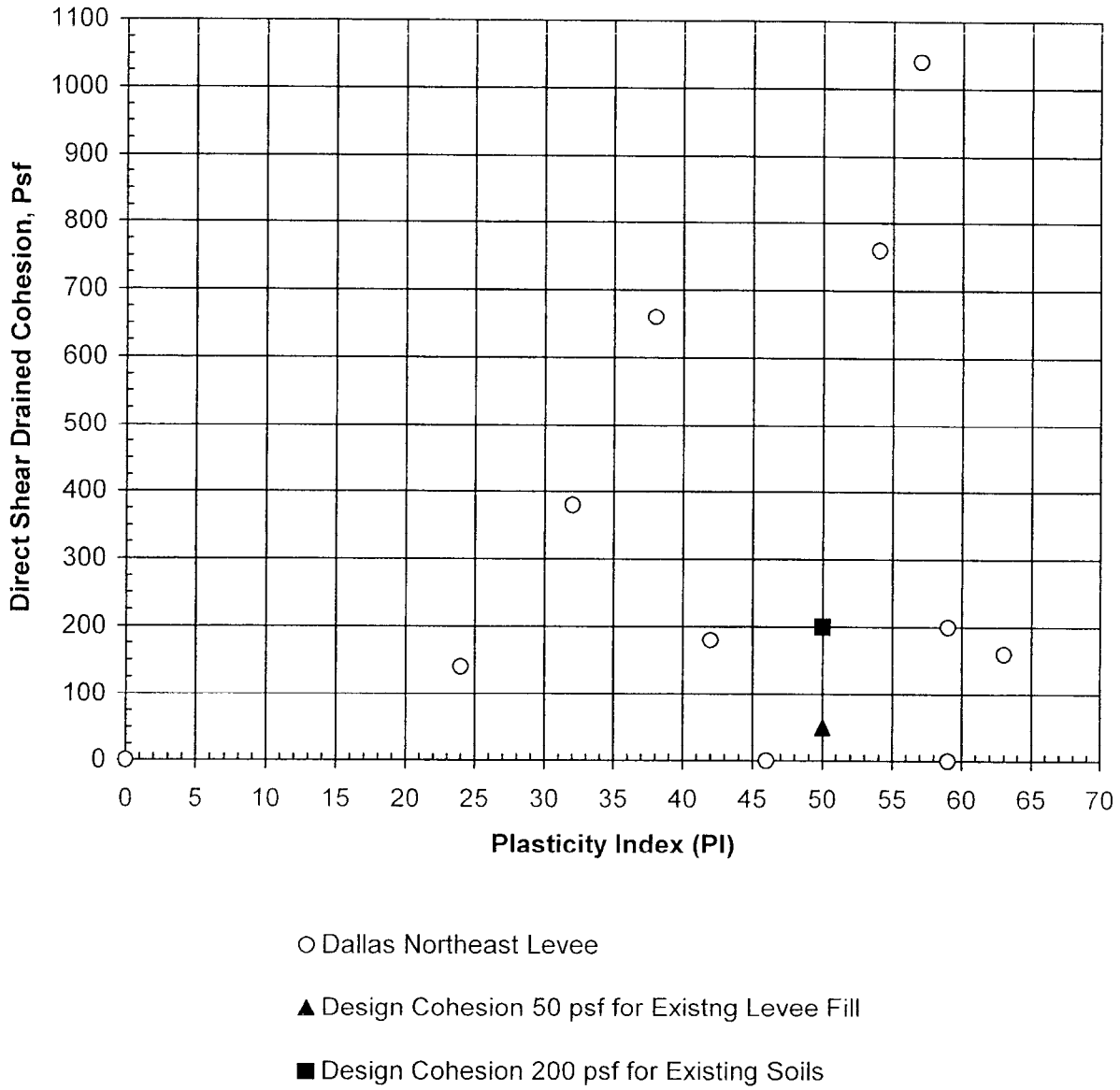

EFFECTIVE COHESION CORRELATIONS
TRINITY PARKWAY NORTHEAST LEVEE
DALLAS, TEXAS

Terracon

Terracon Job No. 94065322

FIGURE 8

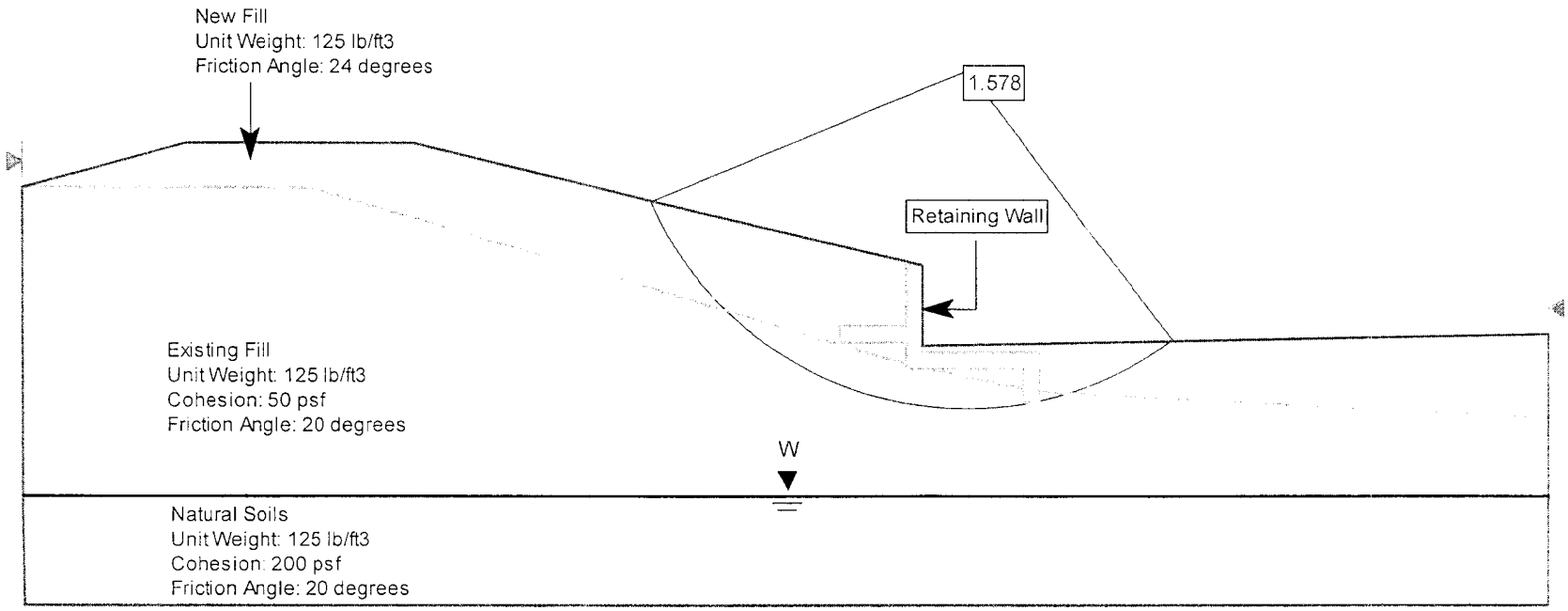

Terracon

Project No. 94065322

GLOBAL STABILITY ANALYSIS OF WALL NEAR WOODALL ROGERS
TRINITY PARKWAY PROJECT
DALLAS, TEXAS

FIGURE 9

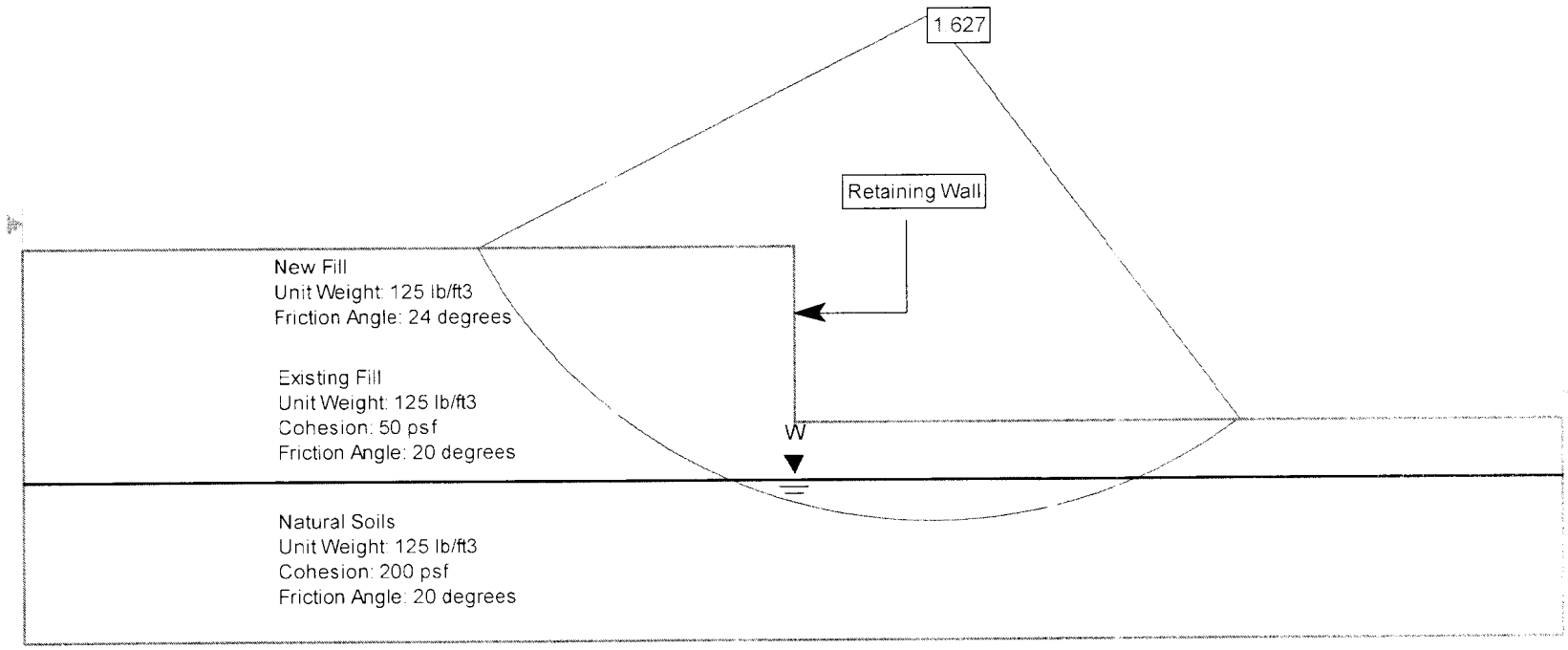

Terracon

Project No. 94065322

GLOBAL STABILITY ANALYSIS OVERLOOK WALL
TRINITY PARKWAY PROJECT
DALLAS, TEXAS

FIGURE 10

APPENDIX K-2

GEOTECHNICAL WORKGROUP DOCUMENTATION

THIS PAGE INTENTIONALLY LEFT BLANK

Halff Associates

8609 Northwest Plaza Drive
Dallas, Texas 75225-4292
(214) 346-6200
Fax (214) 273-1307

MEMORANDUM 2.1

TO:	Mr. Christopher Anderson Planning Director North Texas Tollway Authority	**DATE:**	5/4/07 Revised 7/26/07
		AVO:	17826/WO25
FROM:	Conrad Harrison/ Matt Craig / Todd Milburn *Email:* charrison@halff.com	**PROJECT:**	Trinity Parkway SDEIS

SUBJECT: Preliminary Estimation of Soil Usability within the Dallas Floodway

USACE & NTTA ISSUE: Suitability of Floodway Material for Levee Raise and Roadway Embankment

---

This letter report is prepared in partial response to Comment #2 "Borrow Areas" of the USACE Feb 16, 2007 commentary on the draft Schematic of Trinity Parkway Alt. 3C. The report has been prepared for NTTA by Halff Associates, Inc. and Halff's geotechnical subconsultant, Terracon, Inc.

Study Purpose:

Trinity Parkway Alternatives 3A, 3B, 3C, 4A and 4B, located within the Dallas Floodway, are expected to be constructed on embankments built using material borrowed from proposed lakes and river channel meanders shown in the City of Dallas Balanced Vision Plan. The lake and channel excavation is additionally expected to provide sufficient impervious material for expanding and raising the Floodway levees, a flood damage reduction action proposed by the City and USACE. USACE Comment #2 primarily questions that sufficient suitable material exists in the Floodway to meet the needs of the roadway embankments and levee expansions. The purpose of this study is to provide a preliminary characterization of soil materials in the borrow sites to address this concern.

Geotechnical Data Collection:

This report is based on geotechnical data for available soil borings and exploratory trenches in the Dallas Floodway. The study team has collected, compiled, and catalogued all known reports from public works projects in the Floodway, such as bridges, sewer lines, transmission lines and archaeological studies. The following is the list of collected reports. All the referenced reports are on file at Halff:

- Archaeological Testing for the Trinity Parkway, AR Consultants, Inc. (2006)
- Dallas Trinity River In-Stream Whitewater Park Hydraulic Design – City of Dallas (2007)
- Closure Plan Municipal Sludge Disposal Lagoon E - Halff Associates (1993)
- Closure Plan Municipal Sludge Disposal Lagoon D - Halff Associates (1993)
- Geotechnical Report: Woodall Rodgers Bridge - Terra-Mar, Inc. (2004)
- Geotechnical Report for DWU Cadiz PS Wastewater Pipeline Improvement (2003)
- Upper Trinity Feasibility Project- USACE (Gilles Engineering) (2004)

8609 Northwest Plaza Drive
Dallas, Texas 75225-4292
(214) 346-6200
Fax (214) 273-1307

- Project Report on Dallas Floodway: Volume III – Pavaho Street Pumping Plant – USACE (1952)
- Project Report on Dallas Floodway: Volume IV – Pumping Plant B – USACE (1953)
- Project Report on Dallas Floodway: Volume VI – Pumping Plant C– USACE (1954)
- Project Report on Dallas Floodway: Volume V – Floodway Improvements – USACE (1955)
- Dallas Floodway Extension: General Reevaluation Report and Integrated EIS - USACE (1998)
- Westmoreland Bridge Boring Logs - TETCO (1980)
- Geotechnical Investigation: DWU West Bank Interceptor (1991)
- Preliminary Flood Wall Stability Analyses: Trinity Parkway - Terracon (2006)
- Investigations of the Santa Fe Trestle Trail Borrow Pit – Lopez Garcia (2007)
- DART Light Rail Starter Line/Alignment OC-2 – Terra-Mar (1991)
- DART SOC Line: Trinity River Crossing - Mason-Johnson & Assocs. (1987)
- DWU 120-Inch Interceptor - Rone Engineers (1995)
- Westmoreland Street Bridge Approaches - TEAM Consultants (1999)
- Geotechnical Exploration on Santa Fe Trestle Trail - ALPHA Testing (2006)
- Hampton Road: Trinity River Bridge –TxDOT (2004)
- Dallas Floodway Levee: Sediment Sampling - Maxim Technologies (1995)
- Westmoreland Bridge Profile at North and South Levees – Dallas County Public Works
- IH-30 Bridge Widening Over Trinity River - MTE, Inc. (2005)
- Geotech and Environ Investigation: Trinity River Implementation Plan – Terra-Mar (1999)

The study team collected a total of 407 usable soil borings and trenches from the listed reports. Each boring and trench site was located in ARCGIS using the UTM 1983 14N coordinate system, and was plotted on an orthophotograph of the study corridor. **(See Map 1)** The bore log and trench descriptions were provided to Terracon for input into gINT (a geotechnical integrator program) to create a formatted database allowing geotechnical review.

Aerial Photograph Review:

The Floodway area is known to be heavily disturbed over the last century by activities such as gravel mining and filling. Based on anecdotal reports in the corridor, there are areas affected by burial of waste materials, as well as some clean fills apparently generated from excess spoils from downtown building sites. Other areas have been filled and leveled using on-site materials as part of Floodway improvement projects. To ascertain the affected areas, the study team obtained and mapped features from aerial photographs and other applicable reports in the study corridor from 1929 to present. The following resources were reviewed:

- Aerial Photographs from 1929 to present, Metropolitan Aerial Surveys.
- USACE reports from 1952 to 1955 regarding the levee strengthening.
- Closure Plans Lagoons D and E at the Central Wastewater Treatment Plant, Halff Associates.
- A Bureau of Economic Geology report titled "Mineral Lands in the City of Dallas."

Based on the collected information, outlines of former gravel mining sites, borrow areas, fill areas, and other disturbed sites were transferred into the ARCGIS system. The resulting map is shown in **Map 2.**

8609 Northwest Plaza Drive
Dallas, Texas 75225-4292
(214) 346-6200
Fax (214) 273-1307

This information is useful in determining the horizontal extents of fill materials encountered in specific boreholes.

Borrow Sites:

On May 10, 2005, NTTA provided USACE with a letter showing draft locations of borrow sites and associated mitigation areas associated with the Trinity Parkway Floodway routes (Alts 3A, 3B and 4.) NTTA's intent at the time was to excavate approximately five to six million cubic yards of material from proposed lakes and channels associated with the 2004 Dallas Balanced Vision Plan. (BVP) The current letter report is based on essentially the same locations, except the road embankments and lake and channel outlines have been shifted somewhat as a result of USACE consultation in 2006-2007, and the associated development of Trinity Parkway Alternative 3C.

This letter report is also based on an updated (Feb 20, 2007) version of the Balanced Vision Plan provided by the City of Dallas. The lake and channel outlines in this Plan were input into ARCGIS (see Map 3) to allow calculation of borrow volumes. Seven proposed borrow areas are separately analyzed in this report:

1. Wetlands Cell – Proposed east overbank cell between Hampton and Westmoreland Roads
2. West Dallas Lake - Proposed west overbank lake, upstream of Hampton Road
3. Urban Lake – Proposed 82 acre lake near downtown Dallas
4. Natural Lake - Proposed 58 acre lake south of downtown Dallas
5. Upper-Reach Meander - Relocation of river channel (U/S of Westmoreland)
6. Middle-Reach Meander - Relocation of river channel (U/S of Continental to Hampton)
7. Lower-Reach Meander - Relocation of the Trinity River channel (DART to U/S of Continental)

On July 2, 2007 NTTA, USACE, FHWA and the City of Dallas reached an Interagency Agreement that for permitting purposes and to show project independent utility the borrow sites for the Trinity Parkway fill would be confined to the wetland cells and the dry lake excavation of the West Dallas, Urban and Natural Lakes. Additional borrow material from the lakes, wetland cells, river channel meanders and areas outside the Trinity Parkway Project will be used for the improvements to the levees and the proposed Trinity Floodway Park Project.

Soil Characterization:

USACE has indicated that impermeable clay materials, identified as either "CH" or "CL" in the Unified Soil Classification System, would be acceptable as levee fill material. Other materials would not be acceptable. To aid in characterizing the available material from the borrow sites, the detailed soil strata information from the available borings was simplified into four designations as follows. Guidance was provided by Terracon in applying these designations to the material logged in the available soil borings:

1. Levee-Usable Material – CH and CL clays suitable for levee expansions.
2. Roadway-Usable Material – materials suitable for roadway embankments, such as soils with clay (that were not CH or CL), silt, sand, gravel, limestone, and shale.

8609 Northwest Plaza Drive
Dallas, Texas 75225-4292
(214) 346-6200
Fax (214) 273-1307

3. Unusable Material – Materials judged unsuitable for either levee or road fill, such as construction debris, metal-containing fill, or miscellaneous trash.
4. Unknown Material – This designation was typically applied to locations where the adjacent bore-log data was not deep enough to provide information. Also, in one case, this designation was applied to a specific log that only listed "fill".

Borrow Site Characterization:

Appendix A contains detailed information for each of the seven borrow sites listed above. This includes a site map of each site, cross-sections showing the bore-logs in the area, and calculations of the expected volumes of soil by type. The bore-logs have been simplified into the four soil designations shown under "Soil Characterization" above. Where applicable, borrow sites were broken into sub-areas assumed to have similar underlying soil characteristics. Generally break lines were drawn at expected discontinuities in the soil strata, such as the edges of historic fill sites or at physical boundaries such as the river channels. Where adjacent borings showed significantly different materials (such as a sand lens) that did not correlate with historic data, a break line was drawn generally half way in between the borings to approximate the extent of the different zones. Within each sub-area, the expected material is broken up into percentages of levee-usable, roadway-usable, unusable and unknown based on visual inspection of the applicable bore-logs.

It was determined during workgroup meetings between NTTA, USACE, FHWA and the City of Dallas that additional soil borings would be taken in areas of the Trinity Floodway where no or insufficient data was currently available (see Memorandum 2.1a). Terracon was contracted to conduct a total of 29 borings to supplement the existing data to further clarify the borrow site characterizations and assist in identifying areas for potential seepage under the levees. (See Terracon Proposal and Additional Borings Map attached.) As of this writing, borings X-1 through X-5 (see attached bore logs) have been completed and additional work has been postponed due to weather.

Required Fill Volumes

An estimate of the required fill volume for Alt 3C has been prepared to guide the determination of the borrow volume. Halff has prepared GEOPAK sections of the east and west levee improvements in the Floodway, as well as the roadway embankment for Alt 3C. To generate the levee geometry, Halff has assumed all the affected levees are raised to Standard Project Flood (SPF) plus 3.0 feet, the top levee widths are increased to 20-feet, and the levee slopes are thickened towards the river using 4:1 side slopes. The levee improvements are all assumed to be built with CL or CH clay. In addition, USACE has requested in locations where the tollway embankment is adjacent to the levee, an additional zone of CL or CH clay be placed above the new levee toe. (See section on next page.)

8609 Northwest Plaza Drive
Dallas, Texas 75225-4292
(214) 346-6200
Fax (214) 273-1307

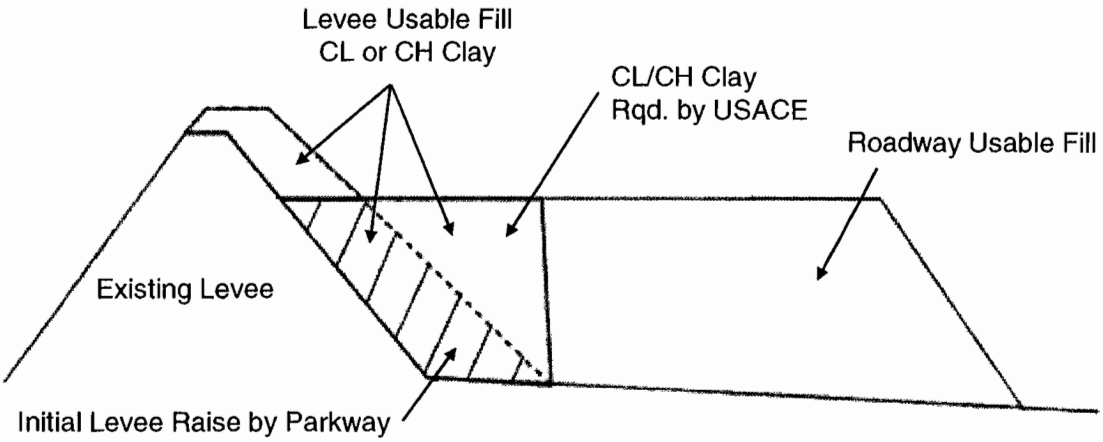

Based on these assumptions, the following is the calculated volume of fill (excluding shrinkage) in the Floodway segment from the DART Bridge to the Elm Fork/West Fork Confluence of the Trinity River.

Item	Levee Usable Fill (CY)	Roadway Embankment Fill (CY)
East Levee Raise and Sideslopes (Hampton to DART)	1.13 Million	0.00 Million
Extra Fill over East Levee Toe	1.00 Million	-1.00 Million
Alt 3C Roadway Embankment	0.00 Million	3.41 Million
West Levee Raise and Sideslopes (Hampton to DART)	0.84 Million	0.0 Million
Levee Raise and Sideslopes (Upstream of Hampton - Approx – Prorated to River Confluence)	1.30 Million	0.0 Million
Totals	**4.27 Million**	**2.41 Million**

Assuming a 10% shrinkage allowance, the target required borrow volume is therefore estimated to be:

- Levee Usable Fill: 4.27 million CY plus 10% = 4.70 million CY
- Roadway Embankment Fill: 2.41 million CY plus 10% = 2.65 million CY
- **Total Fill: = 7.35 million CY**

Since Memo 2.1, 2.1a and 2.1b the following adjustments have been made to the proposed Trinity Parkway Alignment 3C. The embankment along the proposed flood wall of the Trinity Parkway from Continental to Corinth Streets has been removed and the north bound ramps to Jefferson and from Houston streets have been placed on structure eliminating the high retaining walls and reducing the required amount of borrow material needed. The profiles of the north bound and south bound main lanes

8609 Northwest Plaza Drive
Dallas, Texas 75225-4292
(214) 346-6200
Fax (214) 273-1307

were refined to reduce the amount of borrow material needed. The estimate for total fill required by project is described in the table below.

Project	Levee Usable Fill	Roadway Usable Fill	Total Fill
Levee Raise Only (Confluence to DART)	3.60 Million CY	-	3.60 Million CY
Parkway Only (Hampton Rd to DART)	1.70 Million CY	2.65 Million CY	4.35 Million CY
Combined Projects (Confluence to DART)	4.70 Million CY	2.65 Million CY	7.35 Million CY
Levee Raise After Parkway (Confluence to DART)	3.00 Million CY	-	3.00 Million CY
Parkway After Levee Raise (Hampton Rd to DART)	1.10 Million CY	2.65 Million CY	3.75 Million CY

Borrow Site Volumes:

The initial analysis for borrow volumes excavated within the Trinity Floodway were calculated assuming all lakes, wetlands and river channel meanders would be available for use as borrow sites. Since each project shall be able to show Independent Utility and to simplify the permitting process an Interagency agreement was reached. In this agreement, the borrow material for the Trinity Parkway project would only be excavated from the wetland cells, the West Dallas Lake, and the Natural and Urban Lakes. The fill material needed for the levee improvements and Trinity Park improvements are to be taken from the Trinity River channel relocation and other areas.

A Geopak model was generated for the Natural and Urban Lakes based on design plans provided by the City of Dallas. Geopak models were also developed for a modified West Dallas Lake and the Hampton Wetland cells. The West Dallas Lake was redesigned to increase the volume of borrow material by increasing the surface area and depth. The banks of the new West Dallas Lake design were held 200 feet from the toe of the existing west levee and 200 feet from the bank of the existing Trinity River channel. The base of the West Dallas Lake was modeled to an elevation of 390, approximately 18 feet below the average existing ground surface. The Hampton Wetland cells are part of the Trinity Parkway wetland mitigation as proposed in the SDEIS and are modeled to a depth of at least 3 feet below the average existing ground surface for each wetland cell. These models were used to calculate a more accurate volume of borrow material for the earthwork balance.

The soil borings collected by Terracon were analyzed to more clearly define the soils types in the proposed borrow locations. Borings X3 and X4 showed CH / CL type clays to at least a depth of 30 feet. Boring X5 shows CH and CL clays to a depth of 23 feet where it became sand down to 30 feet. Boring X5 is in a location previously identified as unknown that is now classified as suitable for Levee Fill. Boring X-6 showed Levee Usable Fill to a depth of 17.5 feet and then Shale to a depth of 30 feet.

8609 Northwest Plaza Drive
Dallas, Texas 75225-4292
(214) 346-6200
Fax (214) 273-1307

Borrow Site	Levee Usable Fill (CY)	Roadway Usable (CY)	Unusable Fill (CY)	Unknown Fill (CY)
1. Wetlands Cell	0.64 Million	0.00 Million	0.00 Million	0.01 Million
2. West Dallas Lake	2.62 Million	0.02 Million	0.00 Million	0.00 Million
3. Urban Lake	0.99 Million	0.38 Million	0.01 Million	0.02 Million
4. Natural Lake	0.38 Million	0.00 Million	0.03 Million	0.00 Million
Sub Total	**4.63 Million**	**0.40 Million**	**0.04 Million**	**0.03 Million**
5. Upper-Reach Meander	0.75 Million	0.00 Million	0.00 Million	0.00 Million
6. Middle-Reach Meander	0.16 Million	0.22 Million	0.00 Million	0.40 Million
7. Lower-Reach Meander	1.32 Million	0.74 Million	0.00 Million	0.01 Million
Sub Total	**2.23 Million**	**0.96 Million**	**0.00 Million**	**0.41 Million**
Totals	**6.86 Million**	**1.36 Million**	**0.03 Million**	**0.44 Million**

Initial Conclusions:

- The required fill volume in the Floodway (DART to Westmoreland) totals 7.35 million CY, comprised of 4.70 million CY of levee usable fill and 2.65 million CY of roadway usable fill.
- The assumed borrow sites for the Excavation Only Plan generate more than a sufficient amount of material for the roadway embankment.
- The assumed borrow sites generate sufficient material for the levee improvements, but fall short of all the needed roadway fill. The "Levee Usable" and "Roadway Usable" material totals 8.2 million CY, compared to the needed 8.0 million CY of levee and road embankments.
- The excess levee-usable material can be used in the roadway embankments. The study team needs to identify additional borrow sites or increase the depths of the current sites in order to make up the 2.9 million CY shortfall.
  As discussed at the May 7, 2007 meeting of the Geotech Work Group, the shortage of materials may be made up through enlargement of the West Dallas Lake, and potentially through reduction in the fill needed for the Trinity Parkway. The West Dallas Lake would need to be enlarged by approximately 150 acres (assuming a 12' depth).
- The May 10, 2005 NTTA letter to USACE anticipated an earthworks balance for Alt 3B. The current imbalance is largely due to the geometric changes made in Alt 3C to address USACE concerns, particularly the larger embankments near downtown due to the movement of the road towards the river. The 2005 letter also did not account for any west levee improvements or levee improvements upstream of Hampton Road.

THIS PAGE INTENTIONALLY LEFT BLANK

Halff Associates

8609 Northwest Plaza Drive
Dallas, Texas 75225-4292
(214) 346-6200
Fax (214) 273-1307

MEMORANDUM 2.1a

TO: Mr. Christopher Anderson
Planning Director
North Texas Tollway Authority

DATE: 5/23/07

AVO: 17826/WO25

FROM: Conrad Harrison
Email: charrison@halff.com

PROJECT: Trinity Parkway SDEIS

SUBJECT: Compilation of Bore Log and Trench Data in the Dallas Floodway

USACE & NTTA ISSUE: Suitability of Floodway Material for Levee Raise and Roadway Embankment

---

Additional geotechnical investigations for preparation of the Trinity Parkway Supplemental Draft Environmental Impact Statement (SDEIS) were recommended by the Trinity Parkway's Geotechnical Work Group during their May 18, 2007 meeting. This investigation would supplement the compilation of previous geotechnical investigations prepared for NTTA by Halff Associates, Inc. and Halff's geotechnical subconsultant, Terracon, Inc. The previous work was documented in Technical Memorandum 2.1 dated May 4, 2007 and distributed to the Geotech Work Group at their May 7, 2007 meeting.

Memorandum 2.1 documented a total of 407 usable soil borings and trenches from previous reports. Each boring and trench site was located in ARCGIS, and was plotted on an orthophotograph of the study corridor. The bore log and trench descriptions were compiled by Terracon into gINT (a geotechnical integrator program) to create a formatted database allowing geotechnical review. Electronic versions of the gINT database and .pdf versions of the bore logs were provided to the USACE at the May 18, 2007 meeting of the Geotech Group, with copies given to the City of Dallas on May 24, 2007.

To better characterize the soils within the excavation areas with limited information, an additional 15 borings are suggested to be taken, as shown on the attached map. These borings will be used to identify if the soils are suitable for levee embankment and/or roadway embankment. They will also be used to assist in identifying areas for potential seepage under the levees toward the excavated areas.

The City of Dallas' Lakes Design Team will also be undertaking additional geotechnical investigations. The locations have yet to be determined.

Note that this geotechnical investigation is only being undertaken for clarification of information to be used in the SDEIS. Further investigations will be performed for use in the Final EIS and design of the various features in the river corridor. The determination of the scope of those investigations is on-going.

Halff Associates

8609 Northwest Plaza Drive
Dallas, Texas 75225-4292
(214) 346-6200
Fax (214) 273-1307

MEMORANDUM 2.1b

TO: Mr. Christopher Anderson
Planning Director
North Texas Tollway Authority

DATE: 5/23/07

AVO: 17826/WO25

FROM: Conrad Harrison
Email: charrison@halff.com

PROJECT: Trinity Parkway SDEIS

SUBJECT: Compilation of Bore Log and Trench Data in the Dallas Floodway

USACE & NTTA ISSUE: Suitability of Floodway Material for Levee Raise and Roadway Embankment

---

A compilation of previous geotechnical investigations has been prepared for NTTA by Halff's geotechnical subconsultant, Terracon, Inc. This work was used for the preparation of Technical Memorandum 2.1 dated May 4, 2007 (attached) and distributed to the Geotech Work Group at their May 7, 2007 meeting.

Memorandum 2.1 documented a total of 407 usable soil borings and trenches from previous reports. Each boring and trench site was located by Halff in ARCGIS, and was plotted on an orthophotograph of the study corridor as shown in Maps 1 through 4. The bore log and trench descriptions were compiled by Terracon into gINT (a geotechnical integrator program) to create a formatted database allowing geotechnical review, per their March 23, 2007 agreement with Halff (attached). Electronic versions of the gINT database and .pdf versions of the bore logs were provided to the USACE at the May 18, 2007 meeting of the Geotech Group, with copies given to the City of Dallas on May 24, 2007.

Note that this geotechnical investigation was undertaken for clarification of information to be used in the SDEIS. Further investigations will be performed for use in the Final EIS and design of the various features in the river corridor. The determination of the scope of those investigations is on-going.

Halff Associates

8609 Northwest Plaza Drive
Dallas, Texas 75225-4292
(214) 346-6200
Fax (214) 273-1307

MEMORANDUM 3.1

TO: Mr. Christopher Anderson
Planning Director
North Texas Tollway Authority

DATE: 5/4/07 Revised 5/18/07

AVO: 17826/WO25

FROM: Matt Craig
Email: mcraig@halff.com

PROJECT: Trinity Parkway SDEIS

SUBJECT: Conceptual Design Regarding Trinity Parkway Crossings of the Dallas Floodway Levees

USACE ISSUE: Penetration or Alteration of USACE Project, Flood Fighting, O&M Access

---

The guidance regarding the development of the Trinity Parkway Alternative 3C was reiterated by the USACE on February 16, 2007. These comments addressed the February 1, 2007 preliminary draft of the Trinity Parkway Alt. 3C plan, profile and cross sections. The USACE asked for strict compliance to their guidelines, including:

1. No penetration of the levee
2. No excavations into the levee template
3. Maintain a minimum of 15 feet clearance between the levee and the lowest member of any structure passing over the levees
4. Maintain a minimum distance of 50 feet between the toe of the modified levee and any non-earthen structures

Alternative 3C requires that the existing levee be crossed at two locations and that the proposed Lamar levee extension be crossed at three locations. In an effort to meet the four criteria above, the NTTA developed an initial Trinity Parkway alignment alternative, designated Alt. 3C1, that spanned the entire levee (see attached strip map Tab 3.2). The following table shows the required span length for a bridge spanning over the entire levee with column lines 50 feet outside of the riverside and landside toes. This assumes a levee 35 ft. in height, a 20 ft. top width, and bridge skews as shown.

Bridge Skew (deg)	Levee Width incl. 50' offsets (ft)	Span Length (ft)
0	400	400
10	400	406
20	400	426
30	400	462
40	400	522

For a highway bridge, the longest available span for standard prestressed concrete beams is around 120 ft., and the longest available span with conventional rolled steel beams is around 250 ft. All of the bridge spans shown in the table above would require an exotic bridge design, such as arch, cable-stayed

8609 Northwest Plaza Drive
Dallas, Texas 75225-4292
(214) 346-6200
Fax (214) 273-1307

or fabricated steel section. Alternative 3C1 was aligned to keep the crossing skew within 30 degrees. NTTA's preliminary estimates for the needed spans on Alt 3C1 show an increase in overall project cost of around $22 million using spans appropriate for conventional rolled steel beams, and $190 million for the exotic bridge spans.

As an alternative, the NTTA proposes that the levees be widened at the roadway crossings and that a column be allowed in the area of the widened levee top at all crossing points to reduce the needed span lengths to less than 250 feet as shown in attached strip map Tab 3.3. The concept for allowing bridge columns near the levee top has been permitted on other bridges in the Floodway including the recently-approved Margaret Hunt Hill bridge (Woodall Rodgers Extension.) Using this approach, the table above changes as follows:

Bridge Skew (deg)	Levee Width incl. 50' offsets (ft)	Span Length (ft)
0	200	200
10	200	203
20	200	213
30	200	231
40	200	261

Assuming a column line at the levee top, the crossings could be achieved with conventional rolled steel spans (250' max) with a skew of up to ~ 37 degrees. NTTA recommends this approach, and proposes to use this design as shown in Alternative 3C2 (see attached strip map Tab 3.3). The proposed areas for reinforced levees with landside widening are highlighted in green on the map. Bridge bent (column) locations are also shown in the plan and profile sections of the 3C2 map. Cross sections of Alternative 3C2 at 200 feet increments are provided as Tab 3.4.

The reinforced levees consist of a substantial widening of the levee in the area of the Trinity Parkway crossings. The following responds to concerns of this concept on a previous draft:

- From a hydraulic perspective, the realignment will make no change on the river hydraulics since the riverside face of the levee is unchanged.
- From the geotechnical perspective, the levee top width is increased from its normal 20 feet up to a maximum in excess of 200 feet, and levee sides slopes are unchanged from the Corps design. We would welcome further specific guidance on this issue.
- From an economic perspective, NTTA would participate in any additional costs for the levee reinforcement.
- From an environmental perspective, any additional environmental impacts would be accounted for in the Trinity Parkway SDEIS and FEIS.
- Any impact on the Corps sump design would be addressed and mitigated as part of the Trinity Parkway.
- Required additional ROW for 'project lands,' necessary for this widening, would be acquired and deeded back to USACE.

8609 Northwest Plaza Drive
Dallas, Texas 75225-4292
(214) 346-6200
Fax (214) 273-1307

Large scale plans of all five proposed levee crossings are attached for discussion:

3.5 Trinity Pky Levee Crossing Detail at Hampton / Inwood Rd. (Section A-A)
3.6 Trinity Pky Levee Crossing Detail at Continental/Woodall Rodgers Fwy (Section B-B)
3.7 Trinity Pky Levee Crossing Detail at Industrial Blvd./DART (Section C-C)
3.8 Trinity Pky Levee Crossing Detail at MLK Blvd. / BNSF Railroad (Section D-D)
3.9 Trinity Pky Levee Crossing Detail at IH 45 (Section E-E)

The Geotech/Structures Work Group is asked to discuss this concept and suggest the methodology for evaluation of the structural integrity of the levee reinforcement.

The May 7, 2007 meeting of the Geotech Work Group suggested that a diaphragm wall using reinforced concrete in the center of the levees be considered as an alternative to the earthen levee reinforcement. The diaphragm wall would be required to sustain the full loading of the flood waters without consideration of the support from surrounding levee embankment.

Following the meeting, Halff prepared a new Trinity Parkway levee crossing detail at Hampton/Inwood Road using the diaphragm wall (attached). Bridge spans of a typical 120' length were developed, and centered over the diaphragm wall. With the 28 degree skew of the Parkway over the levee, the 120' bridge spans result in the nearest bridge pier being approximately 19 feet from the wall.

Depth to shale in this location is approximately 60 feet below the floodway surface. Using a 35' depth of levee and 5' penetration of the wall into shale, an approximate 100' deep diaphragm wall is needed. The diaphragm wall, bridges and soil/shale depths are depicted on the attached cross sections. The wall was considered to extend along the levee laterally along the roadway crossing to a point where the bridge piers no longer penetrate the levee footprint. For Hampton Road, this requires about 900 linear feet of diaphragm wall.

THIS PAGE INTENTIONALLY LEFT BLANK

Halff Associates

8616 Northwest Plaza Drive
Dallas, Texas 75225-4292
(214) 346-6200
Fax (214) 739-0095

MEETING MINUTES

To: All Attendees

From: Matt Craig, Halff Associates, Inc.

Subject: Trinity Parkway: GeoTech/Structures Workgroup Coordination Meeting

Meeting Date: May 7, 2007

Location: Halff Associates, Inc. 8617 Northwest Plaza, Dallas, TX

Minutes Date: May 17, 2007

AVO No. 17826, WO25

Attendees:

See attached signup sheet

Item	Description
1.	This meeting was held to review the geotechnical issues of concern with regards to the proposed Trinity Parkway, City of Dallas Lakes and USACE's flood fighting capabilities. NTTA opened the meeting. After self introductions,,a review of past meetings and the Goals and Objectives of this Geotechnical Workgroup were discussed as follows: • Review geotechnical analysis to date, • Review borrow material characterization and earthwork balances, • Review impacts to the levee template at the Trinity Parkway crossings, • Review northbound ramps to cross street bridges and their impacts to the levee template and the new IH 35E ramp.
2.	Halff provided an overview of the analysis of the Borrow Material Characterization and Earthwork Balance as presented in Memorandum 2.1 of the handout. Issue: 2.9 million CY shortfall Assumptions: See discussion and conceptual levee cross-section, under Handout Materials, Tab 2 Characterization of Borrow Materials, page 4 of 6. In brief, the following assumptions were used: Levee raise SPF + 3.0'; 4:1 SS, Top of Levee 20.0' wide. Discussion of the topic identified the following points: • USACE noted that current policy (33 CFR. 408) does not allow excavation of material from within the floodway. USACE Headquarters would need to review the Environmental Impact Statements (E.I.S.) Record of Decision (R.O.D.) and 35% complete construction plans before issuing a decision to allow excavation of material from the floodway. • CH2M Hill noted that allowance for compression of existing soil under new

8616 Northwest Plaza Drive
Dallas, Texas 75225-4292
(214) 346-6200
Fax (214) 739-0095

embankment needs to be added to the earthwork balance calculations.

- USACE noted that an allowance for unusable materials encountered from borrow sites needs to be considered, specifically questioned assumption that 100% of the material characterized as 'Usable' is reasonable.
- USACE noted their concern for potential shortening of seepage paths under the levees both during and after construction. They requested that excavation needs to be at least 200 feet from the toe of the levee. (See EM 11-1-1906)
- USACE noted their concern for the location and seasonal fluctuation of the Ground Water Table and potential allowance for loss of material to dewatering needs to be added to analysis. Terracon noted that material dewatering could be addressed during construction so that dried material could still be used.
- USACE would need to see plans for segregation, processing and stockpiling of materials as well as locations for waste material disposal.
- All accepted the assumption of 10% loss of fill volume due to shrinkage is acceptable.
- Assumption of 4:1 slopes for the raised levee improvements is acceptable. USACE has not made any height or volume calculations for the raised levee at this time.

Discussion: USACE has published standards for boring quantities/ frequency to determine the adequacy of borrow sites and seepage analysis that are not met with the current data. The City of Dallas has plans to acquire more borings and will use GINT for analysis. NTTA recognized the need for additional data collection but, given the current stage of project development, asked whether it would be possible to balance this need to the extent that USACE was satisfied, ie., that the data collected could be considered representative. Further, a request for USACE concurrence was made regarding the proposed plans for earthwork,,, contingent on future plan development and the USACE's approval of 408. USACE responded that pending the results of additional analyses, investigations and risk management measures for the various proposals, it would not be possible for them to offer tentative concurrence, relative to the adequacy of the data collected. The Fort Worth District is able to conduct technical reviews. To address the 2.9 million CY short fall, the City stated that the boundaries for the west Dallas lake can be expanded if more fill is needed, or the north overbank toward the river confluence could be considered as an alternative source. NTTA and USACE agreed to this.

3. Halff continued with a review of the additional Alternatives Analysis for the Trinity Parkway conducted since the February 2007 meeting. Halff presented **Alternative ALN 3C1** (exhibit 3.2) which incorporates long span (>500') bridges at the 5 levee crossings. Halff noted that this alternative:

   - Could eliminate bridge pier penetrations into the levee template.
   - Increases the cost of the project by approximately $190 million, as five such crossing would be required.
   - Between approx 2000 feet north of Continental to the DART bridge, requires the parkway alignment to be located farther into the floodway to minimize the length of the roadway crossing the levees and to eliminate penetration of the levee template with piers, and requires additional bridge structure, as noted above. The visual impacts associated with this spanning option negatively impacts the City of Dallas' Balanced Vision Plan.

   The Corps indicated their preference for ALN 3C1 because it minimized impacts to the levee and reduces the quantity of fill needed for embankment. The Corps questioned whether the

8616 Northwest Plaza Drive
Dallas, Texas 75225-4292
(214) 346-6200
Fax (214) 739-0095

entire roadway could be put on structure within the floodway – had this been considered? Could this be considered?

New Alternative, ALN 2C was presented, which follows the Irving / Industrial Blvd alignments (2A and 2B), but is in a tunnel. Halff noted that the construction cost alone could exceed $3 to 5 billion based on unit rates calculated for the proposed IH 635 tunnel at Dallas North Tollway. NTTA noted that this option would not meet the Trinity Parkway project's Purpose and Need given the elimination of access to and from the roadway, as well as its ability to be constructed in time to function as a reliever route for Project Pegasus. The Corps was appreciative that the tunnel option was explored, and then asked whether an alternative that parallels the floodway on the west-side of the floodway had ever been explored, similar in concept to the way ALN 2A and 2B do to the east . NTTA / Halff stated that there is not a suitable alignment to the west of the floodway similar to Irving / Industrial Blvd due to the residential land uses in West Dallas and the need to cross the river floodway twice. An alignment through west Dallas could displace more residences, could have more traffic noise impacts to residences and have negative environmental justice impacts in addition to still having four levee crossings.

Halff presented **Alternative ALN 3C2** (exhibit 3.3) which had the following modifications since the February 1, 2007 submittal to USACE:

- Moved the south end of the proposed Trinity Parkway at least 50 feet from the toe of the proposed Lamar Levee Extension in the area between the DART Rail Bridge and IH 45.
- Modified the northbound Parkway ramps that connect to cross street bridges by replacing bridge structures with embankment and walls to reduce penetrations into the levee template.
- Added additional fill to the land side of the east levee at roadway crossings to reinforce the levee.
- Increased bridge spans up to 250 feet to reduce the number and location of penetrations into the levee template.

Halff also presented 5 drawings (exhibits 3.5 – 3.9) that focus on the areas of levee crossings and asked for comment from USACE for alternative ways to reinforce the levees in areas where the roadway is crossing.

Gene Rice presented the idea of placing a reinforced concrete wall longitudinally through the center of the levee that would structurally support a Standard Project Flood independent of the earth embankment (a reinforced concrete slurry wall, termed a diaphragm wall). The Parkway and Lakes Teams agreed to investigate this concept to reinforce the levees at the roadway crossings.

4. Items 4 and 5 on the agenda were postponed until the next meeting of the Geotech Committee. Chris Anderson closed the meeting.

After the meeting, the group has scheduled to meet again on May 18, 2007 at 9:00 A.M. at the USACE.

This concludes the Meeting Minutes. Our goal is to provide a complete and accurate summary of the proceedings of the subject meeting in these minutes. If you feel that any of the items listed above are not correct, or that any information is missing or incomplete, please contact Halff Associates so that the matter can be resolved, and a correction issued if necessary. These minutes will be assumed to be correct and accepted if we do not hear from you within ten (10) calendar days from your receipt.

M7-0507 - GeoTech Group Mtg at Halff.doc

THIS PAGE INTENTIONALLY LEFT BLANK

NORTH TEXAS TOLLWAY AUTHORITY

GEOTECH / STRUCTURES WORK GROUP - TRINITY PARKWAY
MAY 7, 2007 MEETING SIGN-IN

INITIAL	NAME	ADDRESS	AGENCY	PHONE	E-MAIL
CA	Chris Anderson	5900 W. Plano Pkwy, PO Box 260729 Plano, TX 75026	NTTA	(214) 461-2021	canderson@ntta.org
	Ghaleb Sunna	5900 W. Plano Pkwy, PO Box 260729 Plano, TX 75026	NTTA (Alternate)	(214) 461.2060	gsunna@ntta.org
	Anita Branch	819 Taylor St., Room 3A28 Fort Worth, TX 76102	USACE		Anita.Branch@swf02.usace.army.mil
GR	Gene Rice	819 Taylor St., Room 3A28 Fort Worth, TX 76102	USACE (Alternate)	(817) 886-1374	Gene.T.Rice@swf02.usace.army.mil
	Anita Wilson	300 East 8th St. # 826 Austin, TX 78701	FHWA	(512) 536.5951	Anita.Wilson@fhwa.dot.gov
phone	Jerry DiMaggio	Washington D.C.	FHWA	202-366-1569	Jerry.dimaggio@dot.gov
	Jorge Pagan	Washington D.C.	FHWA (Alternate)	202-366-4604	jorge.pagan@dot.gov
GA	Greg Ajemian	1500 Marilla Room 6B South Dallas, Texas 75201	City of Dallas	(214) 671-9504	gregory.ajemian@dallascityhall.com
	Rebecca Dugger	1500 Marilla Room 6BS Dallas TX 75201	City of Dallas (Alternate)	(214) 671-9501	rebecca.dugger@dallascityhall.com
TGA	Tim Abrams	8901 Carpenter Fwy, Ste 100 Dallas, TX 75247	Terracon	(214) 630-1010	tgabrams@terracon.com
MC	Matt Craig	8616 Northwest Plaza Dr. Dallas, TX 75225	Halff Associates	214.346.6375	mcraig@halff.com
	Stan Caldwell	8616 Northwest Plaza Dr. Dallas, TX 75225	Halff Associates (Alternate)	214.346.6280	scaldwell@halff.com
CH	Conrad Harrison	8616 Northwest Plaza Dr. Dallas, TX 75225	Halff Associates (Alternate)	214.346.6657	charrison@halff.com
DSM	David Morgan	8616 Northwest Plaza Dr. Dallas, TX 75225	Halff Associates (Alternate)	214.346.6390	dmorgan@halff.com
JS	Jim Schneider	9193 South Jamaica Street Englewood, CO 80112-5946	CH2M HILL	(720) 286-5243	jim.schneider@ch2m.com
	Jim Parrish	12377 Merit Dr. Suite 1000 Dallas, TX 75251	CH2M HILL (Alternate)	(972) 663-2322	jparrish@ch2m.com

NTTA

NORTH TEXAS TOLLWAY AUTHORITY

GEOTECH / STRUCTURES WORK GROUP - TRINITY PARKWAY
MAY 7, 2007 MEETING SIGN-IN

NAME	ADDRESS	AGENCY	PHONE	E-MAIL
Terry Coomes	1115 San Juan ct Arlington, Tx. 76012	CH2M Hill	817-469 8315	tcoomes2@RR.Tx.com
LES PERRIN	819 TAYLOR ST. COE FT-WORTH, TX	COE	817-886-1694	les.Perrin@swfoe.usace.army.mil
RUTH Rentch	~~[illegible]~~	FHWA-HQ	2023662034	
Todd Milburn	8616 Northwest Pl. Dallas, TX 75225	Halff Assoc.	214.346.6352	tmilburn@halff.com

Halff Associates

8616 Northwest Plaza Drive
Dallas, Texas 75225-4292
(214) 346-6200
Fax (214) 739-0095

MEETING MINUTES

To: All Attendees

From: Todd Milburn, Halff Associates, Inc.

Subject: Trinity Parkway: GeoTech/Structures Workgroup Coordination Meeting

Meeting Date: May 18, 2007

Location: USACE
819 Taylor St., Fort Worth, TX

Minutes Date: May 31, 2007

AVO No. 17826, WO25

Attendees:

See attached signup sheet

Item	Description
1.	This meeting was held to review the geotechnical issues of concern with regards to the proposed Trinity Parkway, City of Dallas Lakes and USACE's flood fighting capabilities. NTTA opened the meeting. After self introductions and a review of past meetings' topics, the Goals and Objectives of this Geotechnical Workgroup were discussed as follows: • Review borrow material characterization and earthwork balances, • Review impacts to the levee template at the Trinity Parkway crossings, • Review northbound ramps to cross street bridges and their impacts to the levee template, plus the at-grade IH 35E ramp. NTTA requests input from other attendee's about their goals for the meeting, and would request agency goals at subsequent meetings, based on the proposed agenda. NTTA's May 18th meeting goal: Reach consensus on whether additional borings are needed, and if so, where. This need is critical as it impacts whether the study limits of the SDEIS need to be expanded. If so, the data collection and additional analysis needed to bring this expanded area into the study should commence immediately. NTTA requests comments from attendees about the material and information presented at the May 7, 2007 meeting of this workgroup now that all have had an opportunity to review the material.
2.	Halff began the discussion of the Borrow Material Characterization and Earthwork Balance as presented in Revised Memorandum 2.1 Handout. ISSUE: 2.9 million CY borrow shortfall. Halff suggested that in addition to adjusting the proposed Trinity Parkway profile to minimize required embankment, any additional embankment could be provided by increasing the size of the proposed West Dallas Lake. City of Dallas commented that it had planned to allow the

8616 Northwest Plaza Drive
Dallas, Texas 75225-4292
(214) 346-6200
Fax (214) 739-0095

West Dallas Lake to be as deep as 25' which could help with the borrow shortfall; it was commented that where excavation depths met or exceeded 25' or more, additional borings would be required. City of Dallas requested other areas be considered, such as the Pavajo Wetlands project and that all possibilities include coordinating with the landscape architecture group to be consistent with the Dallas Balanced Vision Plan. Terracon stated that deepening the West Dallas Lake could use additional core borings in the area since the existing bore log information does not extend very deep.

TO DO: Update mapping to indicate areas and volumes that could be used for additional borrow, including the West Dallas Lake, river meander and Pavajo Wetlands.

ISSUE: Soil Characterization / Groundwater Table.

Discussion followed from the above topic into soil characterization. USACE noted that most of the existing bore log information that had been collected to this point was to establish 'top of rock' depths for future foundation work; the log information does not include all the testing that would be required by USACE to make determinations relative to fluctuating ground water table, seepage, permeable layers, sand lenses, seams, etc. It was noted that the majority of the borings provided at the first Geo-tech Team meeting lacked this comprehensive subsurface information. This information would be required to determine the design, stability and structural integrity parameters for the Trinity Parkway, proposed lakes and levee designs for construction plan preparation. NTTA asked the City of Dallas about its proposed boring plan and how quickly boring could start after a scope of services had been finalized. The City of Dallas responded it has one, through its current Price Agreement, but stated it will change now that it has the information that has been collected from past projects along the floodway. Additional discussion ensued concerning what level of subsurface information would be required for the SDEIS, FEIS and 35% construction plans. FHWA suggested using the Cone Penetrometer as an inexpensive alternative for core boring to collect subsurface data. With respect to sampling, USACE suggested taking borings within 150' of the levee toe, in a Zig-zag pattern.

Groundwater Table: Discussed 1st encounter at the W. Dallas Lake (10' to 15'), Urban Lake (10' to 20'), Natural Lake (5' to 9') and the Meander (variable). USACE expressed concern as to where and how raw excavated material would be prepared for use as embankment material.

TO DO: Tim Abrams, Anita Branch and Greg Ajemian: Develop a scope of services of what information needs to be collected at each stage of study (specifically for the SDEIS, FEIS, and 35% Plans for 404 Permit) and how it will be collected (sampling method and spacing). Draft is due for the next meeting of this workgroup.

3. Halff then moved to the topic of the Trinity Parkway levee crossings.

ISSUE: How to have the proposed Trinity Parkway and ramps cross the levee without negatively impacting the levee or the USACE's ability to fight floods and perform maintenance.

At the May 7, 2007 meeting of this workgroup USACE introduced the concept of constructing diaphragm walls within the levee at each of the 5 locations where the levee is crossed by roadway. These diaphragm walls extend from the top of the levee and extend down into the bedrock and be structurally sound enough to be able to contain a SPF if the river-side levee embankment were removed. Halff consulted with Bencor Construction who has extensive experience constructing slurry walls and diaphragm walls for USACE. Halff presented plan and profile exhibits showing the diaphragm wall and bridge piers at the Hampton Road crossing. Halff drew the concept of constructing the walls on a whiteboard. USACE noted the wall should be placed towards the top of the river side of the levees. Halff estimated the locations and lengths of diaphragm walls as:

- Hampton Rd crossing: 900 LF

8616 Northwest Plaza Drive
Dallas, Texas 75225-4292
(214) 346-6200
Fax (214) 739-0095

- Woodall Rodger's Ramps: 1400 LF
- Industrial Blvd. Ramps: 600 LF
- MLK Blvd. crossing: 900 LF
- IH 45 ramps: 450 LF and 300 LF

USACE emphasized that the diaphragm wall would not replace the flood prevention function of the levee, but would be a redundant, secondary system; key issues of concern for this redundant flood prevention system would be seepage control and structural integrity. USACE also stated that the diaphragm walls only address structural concerns and the criteria for O&M Access and other flood fighting activities would still have to be considered.

Because of the Team's apparent consensus to pursue the diaphragm wall solution, the group decided that the levee reinforcement concept which used extra embankment at the levee crossing (as presented at the May 7, 2007 meeting of this workgroup) would be tabled.

TO DO: Everyone review the diaphragm wall exhibits and submit comments to Halff. Halff develop exhibits for the other four levee crossings.

4. Halff began discussion concerning the northbound ramps to cross streets along the levee.

   ISSUE: Coordination with USACE on Levee Penetration, Flood Fighting, and O&M Access.

   Halff presented an alternative design for the northbound ramps to cross streets along the levee. Plans and cross sections were distributed at the May 7, 2007 Geotech Workgroup Meeting. The February 2007 design had the ramps on bridge structure with piers penetrating the levee template. The revised design places the ramps on earthen fill with retaining walls. Halff provided select cross sections for the ramps at Hampton, Sylvan, Houston/Jefferson, Corinth and MLK. Halff also presented the IH35E ramp which had not been shown previously, and briefly reiterated the importance of maintaining this ramp to south Dallas and southern Dallas County in order to maintain key political support for the project. Due to geometrics, the 35E ramp could not bridge over the levee with a 15 foot clearance so it has been designed as an at-grade ramp, benched on extra embankment as it passes over the levee. The ramp will include removable barriers that will allow USACE O&M vehicles to close off the ramp and have access across the levee. USACE noted the drainage for the IH35E ramp embankment needs to be changed to drain away from the levee. No further comments were made concerning these ramps.

5. The meeting adjourned at 11:30 a.m.

   The workgroup plans to meet again the morning of June 5, 2007 at Dallas City Hall.

This concludes the Meeting Minutes. Our goal is to provide a complete and accurate summary of the proceedings of the subject meeting in these minutes. If you feel that any of the items listed above are not correct, or that any information is missing or incomplete, please contact Halff Associates so that the matter can be resolved, and a correction issued if necessary. These minutes will be assumed to be correct and accepted if we do not hear from you within ten (10) calendar days from your receipt.

THIS PAGE INTENTIONALLY LEFT BLANK

NORTH TEXAS TOLLWAY AUTHORITY

GEOTECH / STRUCTURES WORK GROUP - TRINITY PARKWAY
MAY 18, 2007 MEETING SIGN-IN

INITIAL	NAME	ADDRESS	AGENCY	PHONE	E-MAIL
CG	Chris Anderson	5900 W. Plano Pkwy, Plano, TX 75026	NTTA	(214) 461-2021	canderson@ntta.org
	Ghaleb Sunna	PO Box 260729 Plano, TX 75026	NTTA (Alternate)	(214) 461.2060	gsunna@ntta.org
AB	Anita Branch	819 Taylor St. Fort Worth, TX 76102	USACE		Anita.Branch@swf02.usace.army.mil
GTR	Gene Rice	819 Taylor St., Room 3A28 Fort Worth, TX 76102	USACE (Alternate)	(817) 886-1374	Gene.T.Rice@swf02.usace.army.mil
	Les Perrin	819 Taylor St Fort Worth, TX 76102	USACE (Alternate)	(817) 886-1694	Les.Perrin@swf02.usace.army.mil
[illegible]	Anita Wilson	300 East 8th St. # 826 Austin, TX 78701	FHWA	(512) 536.5951	Anita.Wilson@fhwa.dot.gov
BY PHONE	Jerry DiMaggio	Washington D.C.	FHWA	202-366-1569	Jerry.dimaggio@dot.gov
	Jorge Pagan	Washington D.C.	FHWA (Alternate)	202-366-4604	jorge.pagan@dot.gov
	Ruth Rentch	Washington D.C.	FHWA (Alternate)	202-366-2034	Ruth.rentch@dot.gov
GA	Greg Ajemian	1500 Marilla,Room 6B South Dallas, Texas 75201	City of Dallas	(214) 671-9504	gregory.ajemian@dallascityhall.com
RD	Rebecca Dugger	1500 Marilla Room 6BS Dallas TX 75201	City of Dallas (Alt)	(214) 671-9501	rebecca.dugger@dallascityhall.com
TGA	Tim Abrams	8901 Carpenter Fwy,Ste 100 Dallas, TX 75247	Terracon	(214) 630-1010	tgabrams@terracon.com
MC	Matt Craig	8616 Northwest Plaza Dr. Dallas, TX 75225	Halff Associates	214.346.6375	mcraig@halff.com
SRC	Stan Caldwell	8616 Northwest Plaza Dr. Dallas, TX 75225	Halff Assoc (Alternate)	214.346.6280	scaldwell@halff.com
CH	Conrad Harrison	8616 Northwest Plaza Dr. Dallas, TX 75225	Halff Assoc (Alternate)	214.346.6657	charrison@halff.com
	David Morgan	8616 Northwest Plaza Dr. Dallas, TX 75225	Halff Assoc (Alternate)	214.346.6390	dmorgan@halff.com
[illegible]	Todd Milburn	8616 Northwest Plaza Dr. Dallas, TX 75225	Halff Assoc (Alternate)	214.346.66352	tmilburn@halff.com
[illegible]	Jim Schneider	9193 South Jamaica Street Englewood, CO 80112-5946	CH2M HILL	(720) 286-5243	jim.schneider@ch2m.com
RC	Terry Coomes	12377 Merit Dr., Suite 1000 ~~Arlington~~, TX ~~76012~~ Dallas 75251	CH2M HILL (Alternate)	(817) 469-8315	Tcoomes2@rr.tx.com
	Jim Parrish	12377 Merit Dr., Suite 1000 Dallas, TX 75251	CH2M HILL (Alternate)	(972) 663-2322	jparrish@ch2m.com

NTTA

NORTH TEXAS TOLLWAY AUTHORITY

GEOTECH / STRUCTURES WORK GROUP - TRINITY PARKWAY
MAY 18, 2007 MEETING SIGN-IN

NAME	ADDRESS	AGENCY	PHONE	E-MAIL
G. Santarelli	2315 Southwell Road Dallas	Bencor Corp.	972-247 6767	GSantarelli @ Bencorconstruction.com
Lawrence Piccagli	2315 Southwell Rd Dallas Tx 75229	BENCOR CORP.	972 247-6767	lpiccagli@bencor construction.com
JOE NOVOA	~~[illegible]~~ 8616 NW. Plaza Dr	HALFF	214-346-6250	JNOVOA@HALFF.COM
Guy Benedet	2315 Southwell Rd Dallas Tx 15229	BENCOR CORP	972 247 6767	benedet@bencorconstruction.com
Kevin Craig	819 Taylor St. Ft. Worth, Tx.	USACE	817-886-1473	Kevin.l.craig@swf02-usace.army.mil
Jill Jordan	1500 Marilla 4DN Dallas 75201	City of Dallas	214-670-5299	jill.jordan@dallascityhall.com

Halff Associates

8616 Northwest Plaza Drive
Dallas, Texas 75225-4292
(214) 346-6200
Fax (214) 739-0095

MEETING MINUTES

To: All Attendees

From: Matt Craig, Halff Associates, Inc.

Subject: Trinity Parkway: GeoTech/Structures Workgroup Coordination Meeting

Meeting Date: June 5, 2007

Location: Dallas City Hall
1500 Marilla, Dallas, TX

Minutes Date: June 27, 2007

AVO No. 17826, WO25

Attendees:

See attached signup sheet

Item	Description
1.	This meeting was held to review the geotechnical issues of concern with regards to the proposed Trinity Parkway, City of Dallas Lakes and USACE's flood fighting capabilities. NTTA opened the meeting. After self introductions, Halff requested comments or changes to the minutes of the May 18, 2007 meeting of the Geotech Work Group. None were offered at the meeting, but comments on the minutes should be forwarded to Matt Craig at Halff Associates prior to the next meeting.
2.	The Work Group next discussed the Borrow Material Characterization and Earthwork Balance. ISSUE: Soil Characterization / Groundwater Table. Discussion followed into soil characterization requirements for the Supplemental Draft Environmental Impact Statement (SDEIS), Final EIS and final construction plans. Based on discussions at the previous Geotech Work Group meetings, and follow-on correspondence between Group members, the City of Dallas developed a scope of work for additional soil borings to further characterize the borrow materials. Dallas will issue a work authorization contract to Terracon for 29 additional borings for use in the SDEIS. Terracon then explained the purpose of the borings was to resolve questions for the SDEIS, and that additional investigations would be required for the FEIS and construction plan preparation. They distributed a copy of the scope with a table and map for the borings, which included twenty borings for the lake and river meander characterization for borrow classification and under seepage analysis of the levees, and nine borings for the Pavaho wetlands area's borrow classification and wetland design. Borings would extend from 15' to 35' below grade, and groundwater elevations will be noted. Testing to determine soil classifications will include liquid and plastic limits, moisture content, and percent passing the #200 sieve. Dallas expected to issue the notice to proceed within a day or two, with the work expected to be completed in four weeks, weather permitting. USACE noted that additional geotechnical investigation would be needed for the diaphragm

8616 Northwest Plaza Drive
Dallas, Texas 75225-4292
(214) 346-6200
Fax (214) 739-0095

wall design, but the current investigation was adequate for the SDEIS evaluation of the walls. USACE will evaluate the boring plan for adequacy and respond within a week if more borings are required for the SDEIS. Extent of the excavation was also noted by USACE as a concern for seepage. LopezGarcia Group noted that they are evaluating the proximity of the lake and river relocation excavation to the levees to maintain 200' of separation to avoid seepage. The work group then discussed the possibility of installing groundwater monitoring wells as part of the boring plan, but noted concerns with meeting TCEQ requirements and potential for floodwater entering the wells.

TO DO: Tim Abrams, Anita Branch and Greg Ajemian: Develop a scope of work for information needed at the FEIS, 35% Plans, and 404 Permit stages, and note how it will be collected. Draft plan will be produced for review by this workgroup.

ISSUE: Earthwork balance and borrow shortfall.

As discussed at the previous work group meeting, Halff suggested that in addition to adjusting the proposed Trinity Parkway profile to minimize required embankment, any additional embankment could be provided by increasing the size and/or depth of the proposed West Dallas Lake (near Westmoreland Road). City of Dallas noted that previous planning could allow the West Dallas Lake to be as deep as 25', but the area of the lake would be constrained by planned ball fields, Pavajo wetlands, river meanders and existing levees.

Halff next presented a draft revised profile of the Trinity Parkway. The roadway had been lowered as much as possible, lowering the road north of Continental as close to the 100 year flood elevation, and lowering the section behind the floodwall from Continental to Corinth as low a permissible without causing any fill walls or excavation into the levees. Dallas noted that they wanted the Parkway profile as low as possible to hide the traffic and let the floodwall work as a noise barrier. Halff expects to finish the profile effort and then calculate the updated embankment volume.

TO DO: Halff to recalculate earthwork balance with new design and use results of the SDEIS geotechnical investigation results to estimate the amount of suitable material available in the west Dallas lake.

3. Work Group next discussed the Trinity Parkway levee crossings.

ISSUE: How to have the proposed Trinity Parkway and ramps cross the levee without negatively impacting the levee or the USACE's ability to fight floods and perform maintenance.

At the May 7, 2007 meeting of this workgroup, USACE introduced the concept of constructing diaphragm walls within the levee at each of the 5 locations where the levee is crossed by roadway. These diaphragm walls extend from the top of the levee and extend down into the bedrock and are structurally sound enough to be able to contain a SPF if the river-side levee embankment were removed. USACE noted that the soil of the levee remained the primary structure, with the diaphragm wall acting as a back-up for redundancy.

Halff provided updated location maps for diaphragm walls at:

- Hampton Rd main lane crossing
- Woodall Rodgers Ramps
- Industrial Blvd. Ramps
- MLK Blvd. main lane crossing

8616 Northwest Plaza Drive
Dallas, Texas 75225-4292
(214) 346-6200
Fax (214) 739-0095

- IH 45 ramps

The maps also showed proposed bridge pier locations. USACE questioned the amount of space needed between the diaphragm wall and the bridge piers to avoid an arching interaction. Halff will investigate this concern. Dallas then questioned why this project needs 15' of clearance over the levee when other bridges don't have that much clearance. USACE stated that the diaphragm walls only address structural concerns and the criteria for O&M Access and other flood fighting activities would still have to be considered for the clearances. They also noted that the USACE design pamphlet for the southwest district was being updated to reflect this standard. The clearance requirement will be discussed further at the O&M Work Group.

The group next discussed the IH 35E ramp crossing the levee north of Houston St. bridge. The at-grade crossing of the ramp will also be considered through the O&M work group.

The team concluded the levee crossing discussion with the proposed Reunion palza crossing. Dallas asked that the Reunion plaza cross the levee at-grade with a retaining wall and fill along the edge of the Parkway, instead of a structure. LGG noted that the Lake Design team was meeting later in the week to discuss the overall design. O&M vehicles and pedestrians would have access across the plaza. The O&M Work Group will also discuss this issue.

TO DO: Everyone review the updated diaphragm wall exhibits and submit comments to Halff within one week. O&M Work Group will consider clearances at Hampton crossing, and at-grade crossings of the IH35 ramp and the Reunion Plaza.

4. The meeting adjourned at 11:45 a.m.

The workgroup plans to meet again the morning of June 28, 2007 at Dallas City Hall.

[Now to be rescheduled for the week of July 9]

This concludes the Meeting Minutes. Our goal is to provide a complete and accurate summary of the proceedings of the subject meeting in these minutes. If you feel that any of the items listed above are not correct, or that any information is missing or incomplete, please contact Halff Associates so that the matter can be resolved, and a correction issued if necessary. These minutes will be assumed to be correct and accepted if we do not hear from you within ten (10) calendar days from your receipt.

THIS PAGE INTENTIONALLY LEFT BLANK

NORTH TEXAS TOLLWAY AUTHORITY

1. Geotech/Structures Work Group Members

INITIAL	NAME	ADDRESS	AGENCY	PHONE	E-MAIL
	Chris Anderson	5900 W. Plano Pkwy, Plano, TX 75026	NTTA	(214) 461-2021	canderson@ntta.org
	Ghaleb Sunna	PO Box 260729 Plano, TX 75026	NTTA (Alternate)	(214) 461.2060	gsunna@ntta.org
	Anita Branch	819 Taylor St. Fort Worth, TX 76102	USACE		Anita.Branch@swf02.usace.army.mil
	Gene Rice	819 Taylor St., Room 3A28 Fort Worth, TX 76102	USACE (Alternate)	(817) 886-1374	Gene.T.Rice@swf02.usace.army.mil
	Les Perrin	819 Taylor St Fort Worth, TX 76102	USACE (Alternate)	(817) 886-1694	Les.Perrin@swf02.usace.army.mil
	Kevin Craig	819 Taylor St. Fort Worth, TX 76102	USACE		Kevin.I.Craig@swf02.usace.army.mil
	Anita Wilson	300 East 8th St. # 826 Austin, TX 78701	FHWA	(512) 536.5951	Anita.Wilson@fhwa.dot.gov
	Jerry DiMaggio	Washington D.C.	FHWA	202-366-1569	Jerry.dimaggio@dot.gov
	Jorge Pagan	Washington D.C.	FHWA (Alternate)	202-366-4604	jorge.pagan@dot.gov
By Phone	Ruth Rentch	Washington D.C.	FHWA (Alternate)	202-366-2034	Ruth.rentch@dot.gov
GA	Greg Ajemian	1500 Marilla,Room 6B South Dallas, Texas 75201	City of Dallas	(214) 671-9504	gregory.ajemian@dallascityhall.com
	Rebecca Dugger	1500 Marilla Room 6BS Dallas TX 75201	City of Dallas (Alt)	(214) 671-9501	rebecca.dugger@dallascityhall.com
	Jill Jordan	1500 Marilla Room 6BS Dallas TX 75201	City of Dallas (Alt)	(214) 670-5299	Jill.jordan@dallascityhall.com
	Tim Abrams	8901 Carpenter Fwy,Ste 100 Dallas, TX 75247	Terracon	(214) 630-1010	tgabrams@terracon.com
MC	Matt Craig	8616 Northwest Plaza Dr. Dallas, TX 75225	Halff Associates	214.346.6375	mcraig@halff.com
	Stan Caldwell	8616 Northwest Plaza Dr. Dallas, TX 75225	Halff Assoc (Alternate)	214.346.6280	scaldwell@halff.com
CH	Conrad Harrison	8616 Northwest Plaza Dr. Dallas, TX 75225	Halff Assoc (Alternate)	214.346.6657	charrison@halff.com
	David Morgan	8616 Northwest Plaza Dr. Dallas, TX 75225	Halff Assoc (Alternate)	214.346.6390	dmorgan@halff.com
TM	Todd Milburn	8616 Northwest Plaza Dr. Dallas, TX 75225	Halff Assoc (Alternate)	214.346.66352	tmilburn@halff.com
	Jim Schneider	9193 South Jamaica Street Englewood, CO 80112-5946	CH2M HILL	(720) 286-5243	jim.schneider@ch2m.com
	Terry Coomes	12377 Merit Dr., Suite 1000 Dallas, TX 75251	CH2M HILL (Alternate)	(817) 469-8315	Tcoomes2@rr.tx.com
	Jim Parrish	12377 Merit Dr., Suite 1000 Dallas, TX 75251	CH2M HILL (Alternate)	(972) 663-2322	jparrish@ch2m.com

JOE NOVOA 8616 NORTHWEST PLAZA DR HALFF 214-346-6250 JNOVOA@HALFF.COM
Dalay TX

Trinity Parkway EIS 1500 MARILLA, #6BS Page 3 CITY of DALLAS 214.671.8983 PAUL.LEHNER@DALLASCITYHALL.COM 6/5/2007
PAUL LEHNER DALLAS, TX 75201

NORTH TEXAS TOLLWAY AUTHORITY

GEOTECH / STRUCTURES WORK GROUP - TRINITY PARKWAY
JUNE 5, 2007 MEETING SIGN-IN

NAME	ADDRESS	AGENCY	PHONE	E-MAIL
Bernie Hietbrink	1950 Stemmons Fwy #6000 Dallas, TX 75207	LopezGarcia Group	214-744-7777	bhietbrink@lggroup.com

APPENDIX K-3

OPERATIONS & MAINTENANCE WORKGROUP DOCUMENTATION

THIS PAGE INTENTIONALLY LEFT BLANK

DRAFT

EMERGENCY ACTION PLAN
FOR
TRINITY PARKWAY
DALLAS, TEXAS

NORTH TEXAS TOLLWAY AUTHORITY
Draft Subject to Revision
April 2006

TABLE OF CONTENTS

I. Statement of Purpose
II. Notification Flowchart
III. Emergency Detection, Evaluation and Classification
IV. Responsibilities under the EAP
  A. NTTA Responsibilities
  B. Responsibilities for Notification
  C. Responsibility for Evacuation
  D. Responsibility for Termination and Follow Up
V. Phases of Management
VI. Concept of Operations
VII. Appendices
  A. Plates
  B. Plans for Training, Exercising, Updating and Posting of the EAP
  C. Site Specific Concerns
  D. Approval of the EAP

Emergency Action Plan
for Trinity Parkway
Dallas, Texas

I. Statement of Purpose

The Trinity Parkway has approximately 6.2 miles or around 70 percent of its total length located on a raised embankment riverside of the levees within the Dallas Floodway. Within the Floodway, the road surface is typically set above the 100-year water surface elevation. The road is depressed below the 100-year level at bridge underpasses, where floodwalls and pump stations maintain the 100-year flood protection. Plate 1 shows the locations and names of the Floodwalls and Pump Stations. The 100-year flood protection standard is commensurate with the designs of other roadways on the NTTA system, and meets or exceeds FHWA design standards. Nevertheless, because of the sensitive Dallas Floodway location, a specific Emergency Action Plan (EAP) is established for Trinity Parkway.

The Trinity Parkway EAP establishes procedures to evaluate and react to hazardous river flooding events along Trinity Parkway, both as the event is being forecast and as the event occurs. The Plan also includes maintenance and repair actions in the event of overtopping of the depressed segments of the roadway or other damage to the roads. The EAP is implemented based on river flood stage data, supplemented by flood level gauges and alarms in the field.

II. Notification Flowchart

The Trinity Parkway Emergency Action Plan identifies a sequence of actions to be taken prior to, during, and after a major river flood event. The incident classification system uses the following four levels of severity in which the NTTA Maintenance may classify situations:

- Green- Low Condition: There is no significant rain/flood event in progress or expected. Condition is normal. Routine maintenance, training and preparedness activities are carried out.

- Yellow - Internal alert – A significant rain/flood event is in progress or expected. NTTA Maintenance is monitoring the situation, and has contacted on-site staff to assist in monitoring. However, no adverse impacts are anticipated, and no external assistance is needed to manage the situation.

- Orange - Developing situation – A significant rain/flood event is in progress or expected. There is potential for overtopping of the roadway or floodwalls, and/or flood warning devices indicate high water. The situation is progressing, but some time is available for analyses, decision-making, and mitigation efforts. NTTA Maintenance is closely monitoring, and is in close contact with Dallas Street Services Flood Control Division.

- Red - Imminent situation – There is an immediate or inevitable threat of overtopping the roadway or floodwalls, and closure/evacuation of the Trinity Parkway is required. NTTA Maintenance has activated all plans of action. With DPS and local police assistance, NTTA closes down the Parkway and evacuates motorists and personnel from threatened segments. (See Plate 2 for a roadway closure plan.) NTTA assists Dallas Street Services Flood Control Division, acting as the City of Dallas Flood Control District, in their activities related to the Floodway.

The flowchart for notification of involved persons and agencies follows the Alert Status color codes described above. Figure 1 below shows the flowchart.

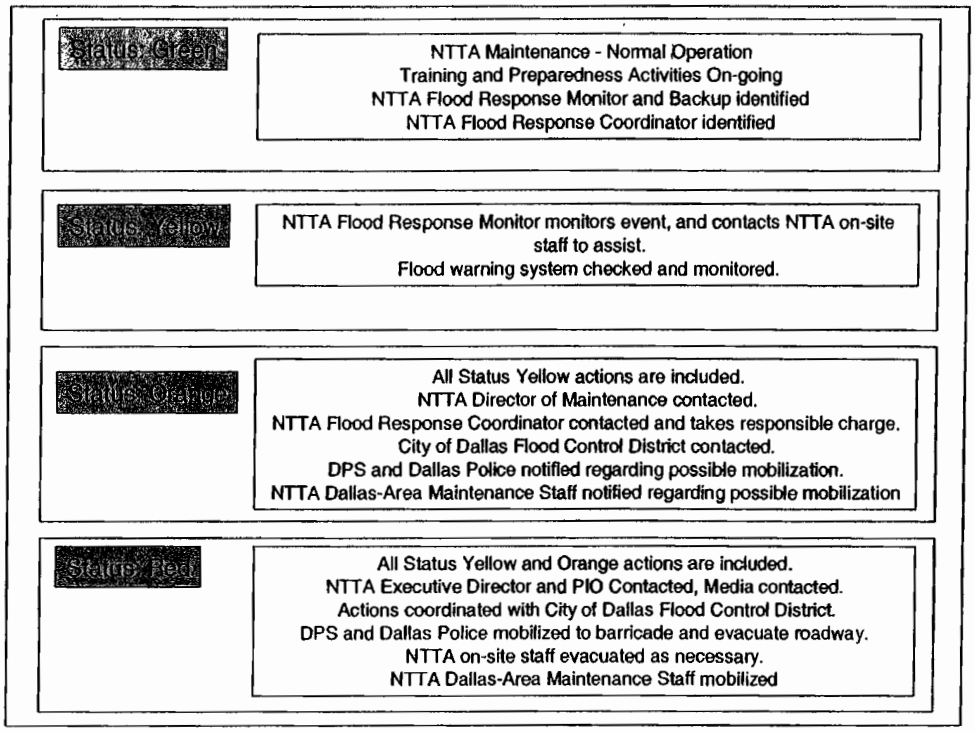

Figure 1 – Notification Flowchart

III. Emergency Detection, Evaluation and Classification

Severe weather in the City of Dallas, usually in the form of thunderstorms, occasionally causes high waters and wind damage in the city. These conditions usually unfold in a predictable sequence in the city: initial high wind, heavy rain, street and underpass flooding and stream flooding. However, the Trinity River watershed stretches up to 180 miles to the west of Dallas into Archer County, and the contributing drainage area at Commerce Street is 6,120 square miles. Because of the size of the watershed, flooding on the Dallas Floodway Levee System may occur during a local rain event, or could occur some time after a rain event as a flood peak reaches Dallas from the west. Accordingly, the NTTA Flood Monitor should closely monitor media resources and river flood stage data during and after periods of significant rainfall in the North Texas region to properly assess threat levels.

Major flooding within the Dallas Floodway is a potential threat to Trinity Parkway. At approximate elevation XXX.XX or about XX.X feet above flood stage water will begin to overtop the floodwalls along the riverside of the Parkway, and will rapidly flood the road. However, the Trinity River will take some time to reach this elevation. For instance, the 500-year flood hydrologic model used by the Fort Worth District of the US Army Corps of Engineers predicts about a 24-hour elapsed time between the first overtopping of the pilot channel banks in the Dallas Floodway (i.e. "flood stage"), and the water surface reaching the top of the floodwalls for Trinity Parkway. It is critical that NTTA staff use this time judiciously to fully assess the extent of predicted flooding and to initiate emergency response actions if needed.

Trinity River flood stage data and predictions are available from the Advanced Hydrologic Prediction Service of the Fort Worth Office of the National Weather Service. The Trinity River

Gauge at Dallas (located on the west end of the Commerce St. Bridge) is recommended as a useful source of flood stage information and predictions for the Parkway. Additionally, flood gages and warning devices are installed alongside Trinity Parkway and maintained by NTTA, as follows:

Gauge No.	Location	Purpose	Flood Stage at Gauge Base	Flood Stage at Top of Adjacent TP Floodwall
1	Adjacent to Hampton Pump Station	Flood Elevation Gauge		
2	Adjacent to Hampton Pump Station	High Water Alarm		
3	Adjacent to Commerce Pump Station	Flood Elevation Gauge		
4	Adjacent to Commerce Pump Station	High Water Alarm		
5	Adjacent to Houston Pump Station	Flood Elevation Gauge		
6	Adjacent to Houston Pump Station	High Water Alarm		
7	Adjacent to Corinth Pump Station	Flood Elevation Gauge		
8	Adjacent to Corinth Pump Station	High Water Alarm		

Once the river overtops the floodwalls, the low points of the Parkway could flood to depths exceeding five (5) feet in less than one hour. It is critical that the road be closed before the floodwalls are overtopped. Localized flooding could also occur on segments of the Parkway, if excessive rainfall in a short period of time overloads the capabilities of the pump system or if pump failure occurs. Barricading and closure of individual segments of the road may be warranted in these events.

IV. Responsibilities Under the EAP

A. NTTA Responsibilities

The NTTA Director of Maintenance is responsible for management and implementation of the EAP, including staffing, resource allocation, training, annual reviews, and updates. The EAP will include a detail schedule for implementation, annual reviews, and updates. The Director will designate the following staff members related to the EAP:

- A Flood Event Monitor (FEM), plus a second person acting as a backup. The FEM is responsible for closely monitoring media resources, river flood stage data, on-site sensors and gauges, and other available information during and after periods of significant rainfall in the North Texas region to properly assess flood threat levels.
- A Flood Response Coordinator (FRC), plus a second person acting as a backup. The FRC will take command of NTTA's response once the EAP is activated.
- The NTTA Director of Maintenance, plus a second person acting as a backup, will be responsible for activating the EAP.

B. Responsibilities for Notification

The Dallas Floodway is a federal flood control project, and is critical to the protection of a major portion of the City of Dallas. **The City of Dallas Street Services, Flood Control Division is to be given primary authority with respect to actions during flood events which may affect the levees or the overall operation of the flood conveyance system.**

The Division Manager of the City of Dallas Street Services, Flood Control Division should be consulted before and during any implementation of the Trinity Parkway EAP. The FRC is responsible for such notification. The NTTA staff is nevertheless authorized to proceed with implementing the Parkway EAP even if they are temporarily unable to contact the Dallas Flood Control Division representatives.

The following representative of the Street Services Department is NTTA's primary contact with the city on all matters related to the EAP. The contact information should be kept current at all times.

Ron Shindoll, Division Manager
City of Dallas
Street Services, Flood Control Division
2710 Municipal Street
Dallas, Texas 75215
Phone: (214) 670-6005
Mobile: (214) 957-5066
Email: Ron.Shindoll@DallasCityHall.com

The City of Dallas Department of Street Services has an Emergency Response Plan, produced and published in cooperation with the US Department of Homeland Security. The plan identifies the Department of Street Services as the lead city agency in the event of emergencies resulting from storm damage, tornadoes and flooding. The Street Services Department also maintains an Incident Command System and a mobile Street Command Van, which would be an important resource to NTTA during a major flood event.

C. Responsibility for Evacuation

Once the EAP is activated, the Texas Department of Public Safety (TDPS), in consultation with the FRC, will take initial command at the site, and will implement road closures and evacuation of motorists and personnel. TDPS will call in assistance, as needed, from Dallas Police Department (DPD), Dallas Fire Department (DFD), and NTTA Maintenance Division.

D. Responsibility for Termination and Follow Up

The FRC will be responsible for termination of the EAP. The FRC will authorize removal of road closures, if necessary preceded by pump-out and cleanup of flooded segments of the road. The FRC will also be responsible for preparation of a complete written report of actions taken and resources utilized. The FRC, in consultation with the Director of Maintenance, will make recommendations regarding follow-up activities, or improvements to facilities and procedures used in the EAP.

V. Phases of Management

1. Mitigation

   a. The NTTA Maintenance Department shall maintain storm drainage pumps, trash filters, natural drainage courses and the storm water collection system in a manner that will assure the most expedient removal of the maximum amount of storm water. Pumps will be periodically maintained and tested in accordance with manufacturers recommendations.

2. Preparedness

   a. Prepare and maintain a resource list of equipment and personnel, including the "base" location of equipment that can be utilized for flooding response and recovery.

   b. Maintain adequate supply of barricades and/or other traffic control devices.

   c. Maintain the Trinity Parkway gauge system and high water alarm system in good working order.

   d. Train personnel in response actions.

   e. The FEM will monitor weather conditions to be alert for any storm watches or warnings affecting Trinity Parkway.

   f. The FRC will maintain periodic contact with City of Dallas, Street Services, Flood Control Division.

3. Response

   a. The NTTA Ohio Drive Service Center will be the Emergency Operations Center (EOC), and the Trinity Parkway North Main Toll Plaza will be the Incident Command Post (ICP).

   b. As soon as possible the FRC or his/her designated representative shall report to the ICP and assume command of NTTA response operations. In the absence of the FRC, the highest ranking NTTA Maintenance Department personnel on site (HRMP) shall assume command of response operations. He/she shall establish contact with Texas Department of Public Safety (TDPS).

   c. The scope of the incident shall determine if the EAP is activated. If conditions warrant, the FRC (or the HRMP) will declare a flood emergency and order closure of Trinity Parkway by TDPS.

   d. TDPS will take initial command at the site, and will call in assistance, as needed, from Dallas Police Department (DPD), Dallas Fire Department (DFD), and NTTA Maintenance staff and contractors. TDPS, DPD and DFD will proceed with barricading (See Plate 2) and evacuation of the threatened segments of the Parkway, as well as providing personnel at critical points to detour traffic and prevent further entry.

   e. Until such time as search and rescue operations are complete and the flood threat has abated, TPDS shall have incident command and the FRC shall report to the TPDS incident command post and shall direct Maintenance Department response operations in accordance with the Incident Action Plan established by TDPS.

f. During the search and rescue phase, the FRC shall evaluate the scope of the incident and determine the resources and personnel needed for the recovery phase of operations and shall begin the process of summoning those resources to the scene.

g. Upon completion of search and rescue operations, TDPS shall relinquish Incident Command to the FRC or other proper NTTA Maintenance Department representative.

h. Upon assuming command the FRC shall establish an Incident Plan of Action (IPA).

4. Recovery

a. Account for all personnel and equipment.

b. Implement the IPA, including restoring pump stations to operational condition; pumping out low points; clearing mud and debris in preparation for reopening; restoring lighting, signage and toll collection equipment as needed.

c. Reopen road. Pick up all barricades and traffic control devices utilized

d. Complete a written report of actions taken and resources utilized.

e. If required, make recommendations for needed modifications to the EAP in the next annual update.

VI. Concept of Operations

Under FRC direction, NTTA personnel will assist TDPS in any required road closures and evacuations. NTTA will assist TPDS in rescue operations involving searches of debris and other tasks requiring departmental resources and heavy equipment. NTTA will assist TDPS in sealing off emergency areas, clearing obstructions to emergency traffic access and other tasks requiring departmental resources and heavy equipment. NTTA will mobilize sufficient forces and equipment to clear debris in order to return roadways and storm drainage systems to pre-incident conditions.

During an emergency incident, NTTA Maintenance Department and TPDS shall provide full cooperation with City of Dallas, Street Services, Flood Control Division (FCD) in their flood fighting operations. NTTA Maintenance will avoid any actions which may interfere with the FCD flood fighting operations, and will remove/mitigate any interference immediately that it comes to the attention of NTTA or is directed by the FCD. Assuming first priority allocation of NTTA staff and equipment to the EAP, additional staff and resources should be made available to serve under the direction of the Flood Control Division to support flood fighting operations.

VII. Appendices

A. Plates

- Plate 1 (North) - Trinity Parkway Roadway Closures in the Event of Threatened Flooding from the Trinity River.
- Plate 1 (South) - Trinity Parkway Roadway Closures in the Event of Threatened Flooding from the Trinity River.
- Plate 1 (North) - Trinity Parkway Pump Station and Floodwall Locations
- Plate 1 (South) - Trinity Parkway Pump Station and Floodwall Locations

B. Plans for Training, Exercising, Updating and Posting of the EAP

C. Site Specific Concerns

D. Approval of the EAP

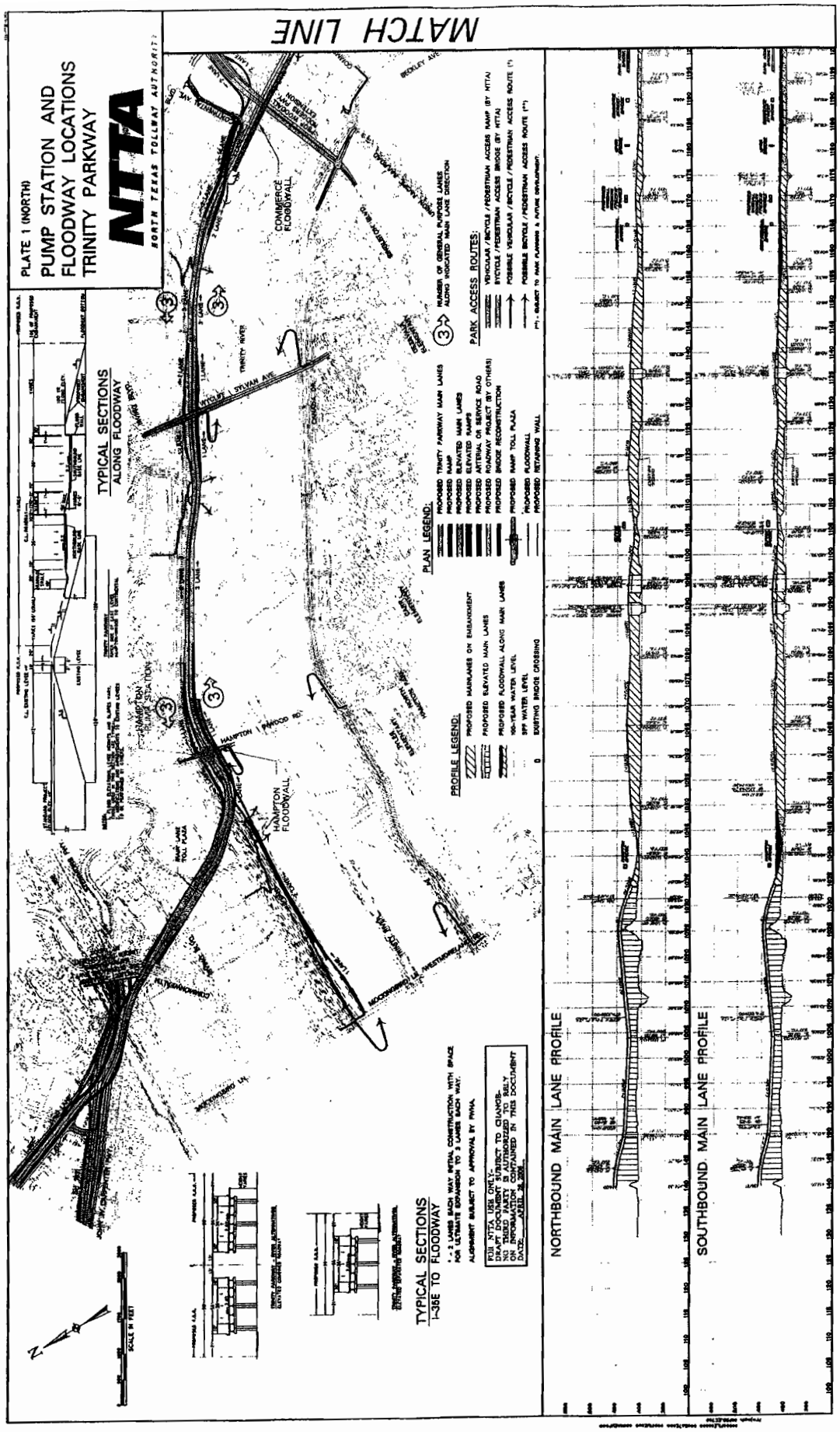
PLATE 1 (NORTH)
PUMP STATION AND FLOODWAY LOCATIONS
TRINITY PARKWAY
NTTA
NORTH TEXAS TOLLWAY AUTHORITY
MATCH LINE
TYPICAL SECTIONS
ALONG FLOODWAY
TYPICAL SECTIONS
I-35E TO FLOODWAY
PLAN LEGEND:
PROFILE LEGEND:
PARK ACCESS ROUTES:
COMMERCE FLOODWALL
HAMPTON FLOODWALL
HAMPTON PUMP STATION
TRINITY RIVER
NORTHBOUND MAIN LANE PROFILE
SOUTHBOUND MAIN LANE PROFILE

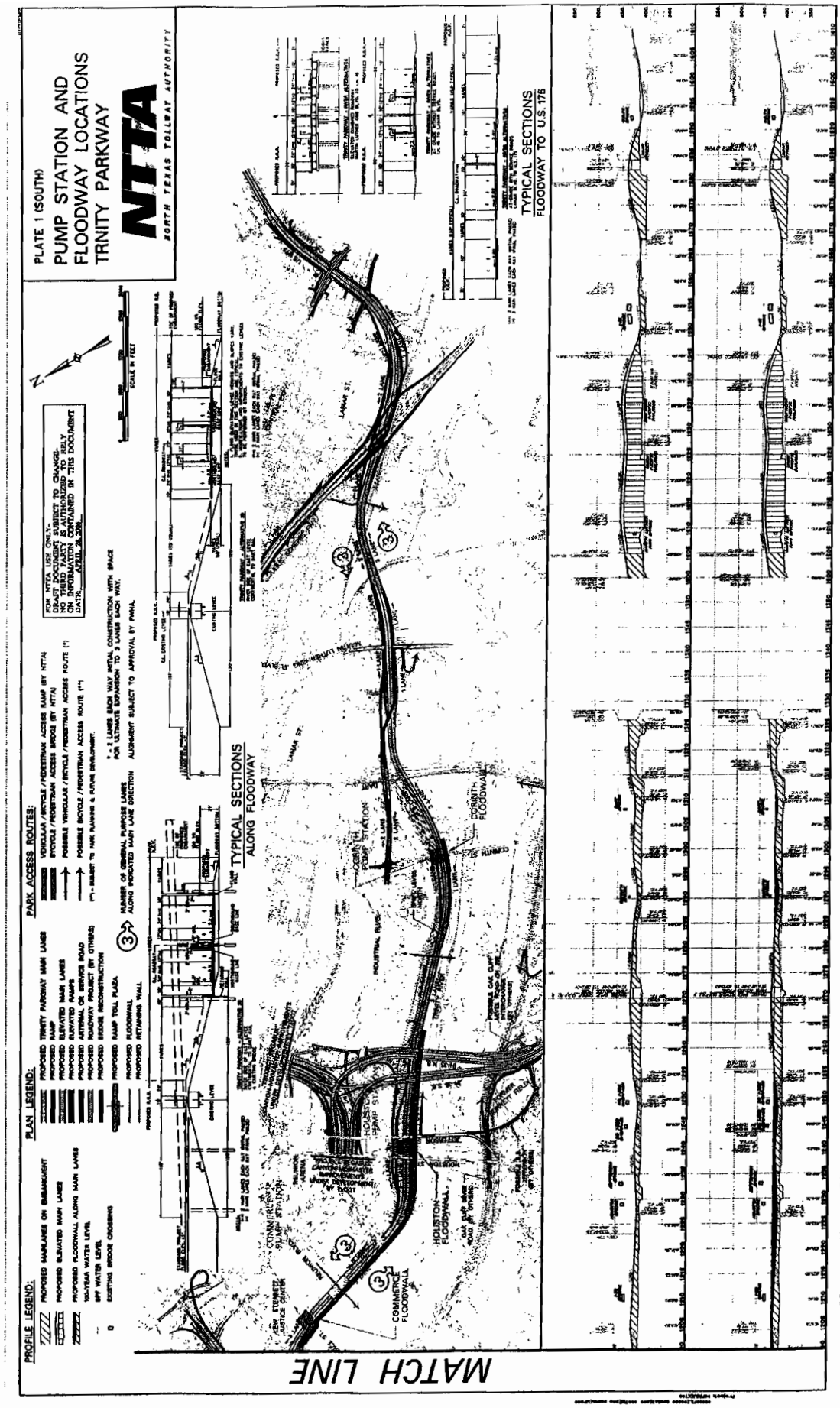
PLATE 1 (SOUTH)
PUMP STATION AND
FLOODWAY LOCATIONS
TRINITY PARKWAY
NTTA
NORTH TEXAS TOLLWAY AUTHORITY
PROFILE LEGEND:
PLAN LEGEND:
PARK ACCESS ROUTES:
TYPICAL SECTIONS
ALONG FLOODWAY
TYPICAL SECTIONS
FLOODWAY TO U.S. 175
COMMERCE FLOODWALL
HOUSTON FLOODWALL
CORINTH FLOODWALL
CORINTH PUMP STATION
LAMAR ST.
MATCH LINE

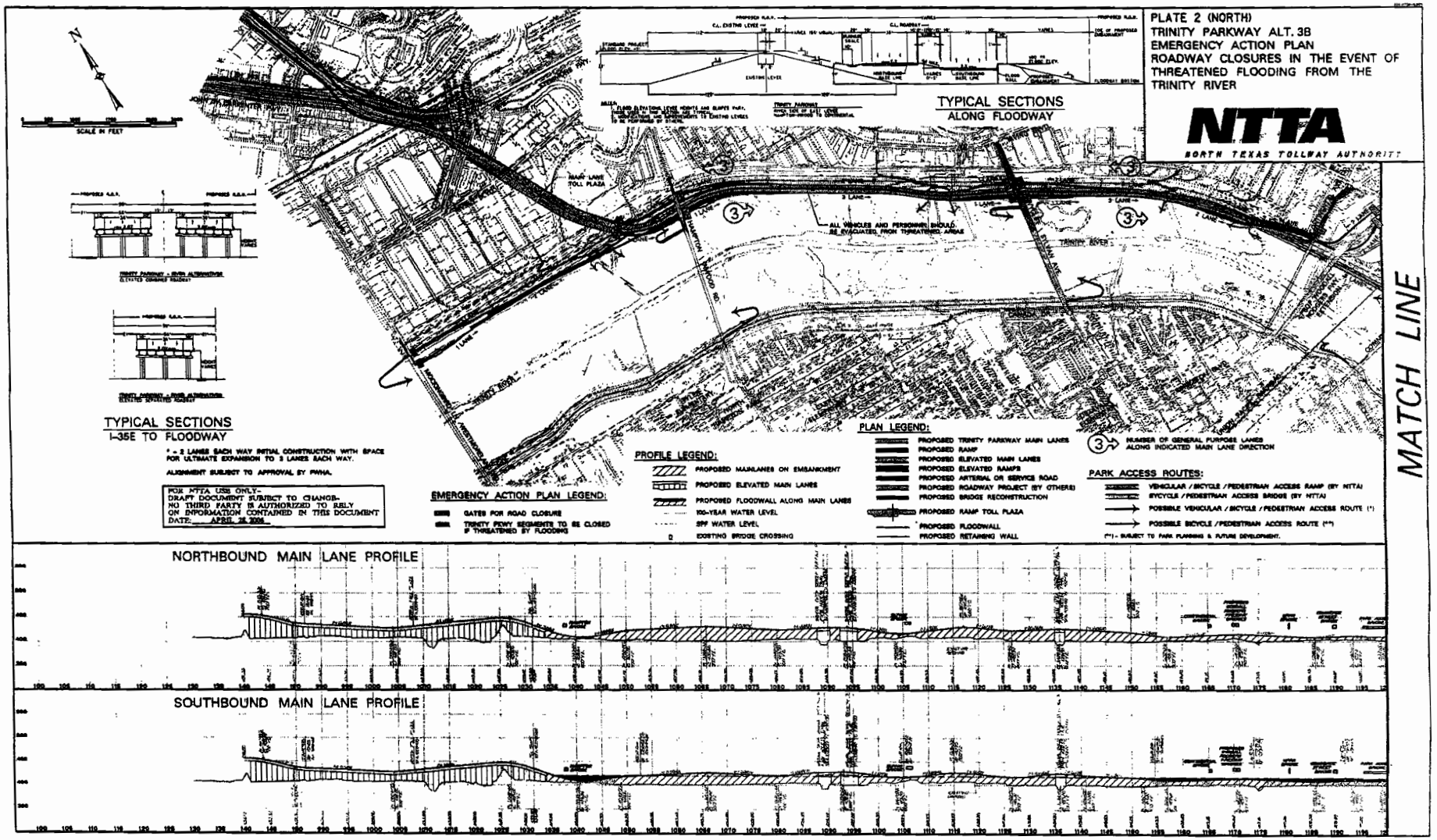
PLATE 2 (NORTH)
TRINITY PARKWAY ALT. 3B
EMERGENCY ACTION PLAN
ROADWAY CLOSURES IN THE EVENT OF THREATENED FLOODING FROM THE TRINITY RIVER
NTTA
NORTH TEXAS TOLLWAY AUTHORITY
TYPICAL SECTIONS
ALONG FLOODWAY
TYPICAL SECTIONS
I-35E TO FLOODWAY
MAIN LANE TOLL PLAZA
ALL VEHICLES AND PERSONNEL SHOULD BE EVACUATED FROM THREATENED AREAS
TRINITY RIVER
MATCH LINE
PROFILE LEGEND:
PROPOSED MAINLANES ON EMBANKMENT
PROPOSED ELEVATED MAIN LANES
PROPOSED FLOODWALL ALONG MAIN LANES
EMERGENCY ACTION PLAN LEGEND:
GATES FOR ROAD CLOSURE
TRINITY PKWY. SEGMENTS TO BE CLOSED IF THREATENED BY FLOODING
100-YEAR WATER LEVEL
25YR WATER LEVEL
EXISTING BRIDGE CROSSING
PLAN LEGEND:
PROPOSED TRINITY PARKWAY MAIN LANES
PROPOSED RAMP
PROPOSED ELEVATED MAIN LANES
PROPOSED ELEVATED RAMPS
PROPOSED ARTERIAL OR SERVICE ROAD
PROPOSED ROADWAY PROJECT (BY OTHERS)
PROPOSED BRIDGE RECONSTRUCTION
PROPOSED RAMP TOLL PLAZA
PROPOSED FLOODWALL
PROPOSED RETAINING WALL
NUMBER OF GENERAL PURPOSE LANES ALONG INDICATED MAIN LANE DIRECTION
PARK ACCESS ROUTES:
VEHICULAR / BICYCLE / PEDESTRIAN ACCESS RAMP (BY NTTA)
BICYCLE / PEDESTRIAN ACCESS BRIDGE (BY NTTA)
POSSIBLE VEHICULAR / BICYCLE / PEDESTRIAN ACCESS ROUTE (*)
POSSIBLE BICYCLE / PEDESTRIAN ACCESS ROUTE (**)
(**) - SUBJECT TO PARK PLANNING & FUTURE DEVELOPMENT.
NORTHBOUND MAIN LANE PROFILE
SOUTHBOUND MAIN LANE PROFILE

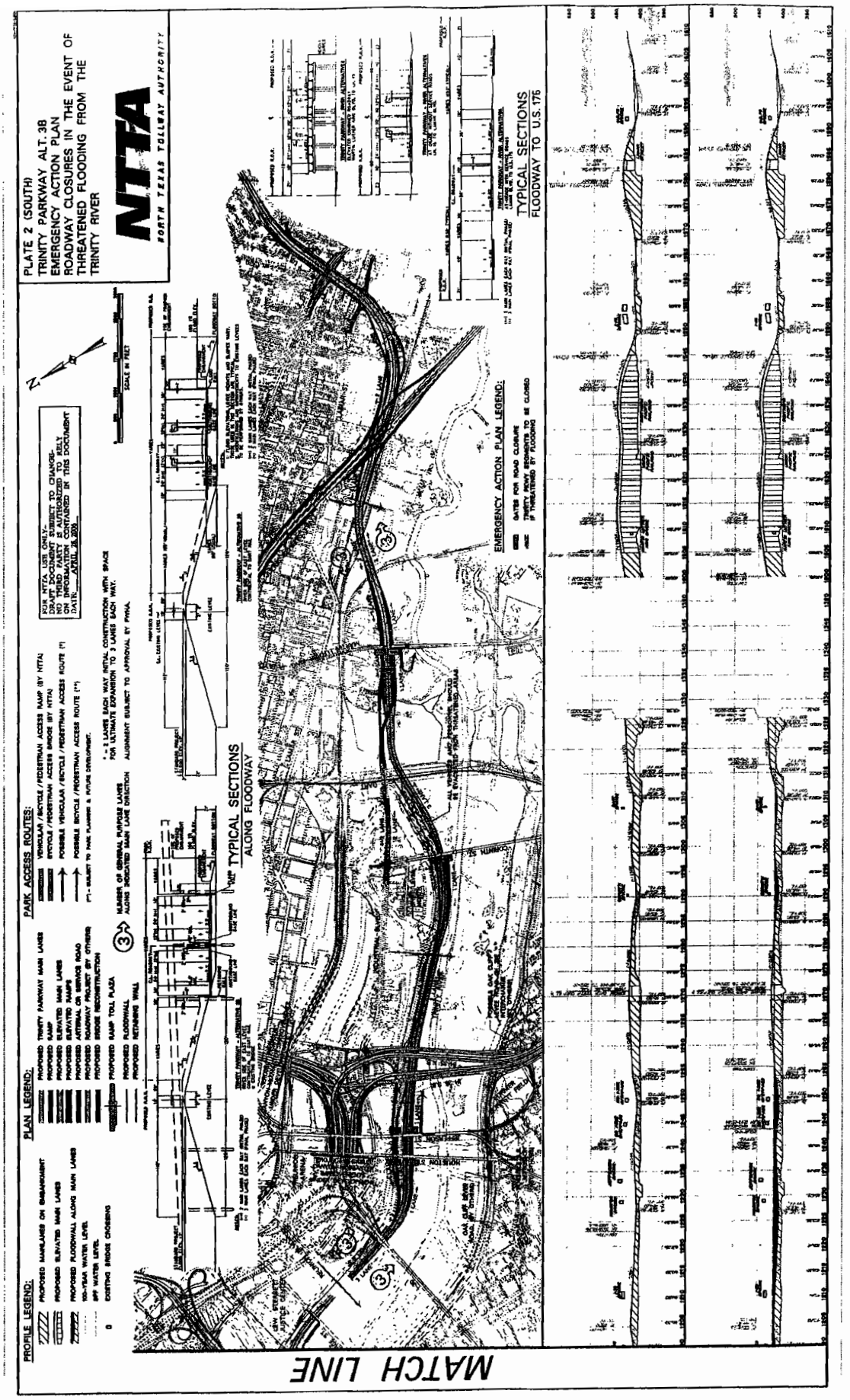
PLATE 2 (SOUTH)
TRINITY PARKWAY ALT. 3B
EMERGENCY ACTION PLAN
ROADWAY CLOSURES IN THE EVENT OF THREATENED FLOODING FROM THE TRINITY RIVER
NTTA
NORTH TEXAS TOLLWAY AUTHORITY
PROFILE LEGEND:
PLAN LEGEND:
PARK ACCESS ROUTES:
TYPICAL SECTIONS
ALONG FLOODWAY
TYPICAL SECTIONS
FLOODWAY TO U.S. 175
EMERGENCY ACTION PLAN LEGEND:
MATCH LINE

THIS PAGE INTENTIONALLY LEFT BLANK

Trinity Parkway EIS O&M Workgroup

6/6/2007
1:00-3:00 PM
Dallas City Hall, Rm 4CN#3

Meeting called by:	Greg Ajemian, City of Dallas	**Type of meeting:**	Progress Meeting
Facilitator:	Greg Ajemian	**Note taker:**	Doug Guinn

Attendees:

Chris Anderson, NTTA; Mark Sissom, USACE; *Anita Wilson, FHWA; *Ruth Rentch, FHWA; Greg Ajemian, COD; Kelly High, COD; David Garcia, COD; Ron Shindoll, FCS; Matt Craig, Halff Assoc; Paul Lehner, COD; Doug Guinn, LOPEZGARCIA (*These individuals joined the meeting by phone)

Minutes

Agenda item: 1. Introductions & Goals **Presenter:** Greg Ajemian

Discussion:

Everyone introduced themselves, who they were with and their role in the Trinity Parkway and/or Trinity Lakes projects. Matt passed out 7 Exhibits to be referenced for the following Agenda items and briefly explained what each was. Greg passed out a copy of an e-mail he sent summarizing points of the 11/8/2006 meeting of the O&M Workgroup. (Copies are attached.)

Action items	Person responsible	Deadline
✓ N/A	N/A	N/A

Agenda item: 2. Maintenance Responsibility Limits/ Roadways **Presenter:** Matt Craig

Discussion:

Reviewed SDEIS Plate 2-13 showing a typical Parkway section with limits of maintenance responsibility. Kelly wanted to clarify Note 3. so that it was clear that City of Dallas Flood Control District is ultimately responsible for all levee maintenance. He requested that the word 'minor' in this Note be deleted. He also requested that Item 3. in Greg's 11/8/2006 be used to add a Note 5. related to interlocal agreement between City, NTTA and possibly TxDOT to share in maintenance/repair costs along the portion of the east levee directly serving the Parkway and to allow NTTA to move ahead when necessary with Parkway priority maintenance/repair, with City oversight.

A question was asked as to whether the levee maintenance roads were of a standard width and construction. Ron indicated that he thought they were originally 10 feet wide and flexible base, but now vary from 10-20 feet in width. Greg mentioned that future roads within the Trinity Lakes park would need to be considered for the dual purpose of park and maintenance access. Access roads around the pump stations will need to be concrete to handle heavier maintenance vehicles.

David noticed that the Parkway structure piers as shown where the Parkway crosses the levee north of Hampton Road, fall within the existing maintenance roads on both the river and lake sides of the levee. It was agreed that the maintenance roadways could be relocated by NTTA to 'weave around' these Parkway piers.

Greg noted that slope maintenance for on-grade Parkway ramps will be NTTA's responsibility. The 'NTTA Mowing' areas indicated on Plate 2-13 are also areas for which NTTA will be required to provide litter cleanup.

Both desirable and undesirable ingress/egress between the Parkway and levee was discussed. No fence will be placed on the levee side of the Parkway. However Concrete Traffic Barrier's (CTB's) will be placed along the outside shoulder. It was agreed that further discussion should occur to determine whether CTB's should be continuous and if so, how to provide maintenance/emergency access points to/from the Levee to/from the Parkway.

A brief discussion occurred regarding location of new maintenance roads along the Levee extension. COD agreed to provide NTTA with locations for these new maintenance roads.

Action items	Person responsible	Deadline
✓ Modify Note 3. to delete the word 'minor'	Matt Craig	ASAP
✓ Add Note 5. based on item 3 in 11/8/2006 Greg Ajemian e-mail	Matt Craig	ASAP

Agenda item: 3. Major Levee Crossings **Presenter:** Matt Craig & Greg A.

Discussion:

Reviewed and discussed 5 levee crossing exhibits showing diaphragm walls. Matt explained that diaphragm walls would be located on the River side of the top of the levee and extend from shale or rock to flush with the top surface of the levee. In some cases the wall will be 100 +/- feet in depth. This wall will be considered as secondary flood protection with the levees stilled considered the primary means of flood protection. New bridge piers will straddle the diaphragm wall and are currently designed to be 10-15 feet clear of the wall.

It was indicated that the USACE desires a floodgate be constructed at the end of the current east levee near the DART bridge.

Discussed IH-35E connecting ramp At-grade levee crossing. Anita expressed concern with connection to IH-35E off-ramp. David and Kelly expressed concern of Able pump station access road crossing this ramp. This access road is used frequently for pump station maintenance and an at grade crossing is not desirable. Matt said that he would look at placing a hump in the profile between IH-35E and Jefferson to allow for the acces road to cross under this ramp. A new Able pump station and possibly new site is planned, but the exact location is not know at this time. Carter + Burgess will establish this in their new Design project scheduled to start later this month. Greg suggested shifting ramp alignment to cross under 90' Houston span. There may be a conflict with the future Industrial Boulevard realignment. Matt said they would confirm if this is accurate or not.

Doug passed out and described an exhibit showing a Conceptual Reunion Overlook Section (attached). There was general acceptance of the section with the following comments:

1) David stated that a landside levee maintenance road in this area would be desirable for flood-fighting purposes. It was requested that LOPEZGARCIA review this scenario and include a 'tunnel' access through the landside Overlook embankment. This access roadway would need to be above the 393.00 elevation required for the Able pump station.
2) Mark, David and Kelly stated that the river side levee slope beneath the Overlook structure should be armored with concrete rip-rap or similar system. Rock rip-rap is not desired.
3) Greg requested that the pedestrian connector bridge span the entire width of the Overlook vs. multiple narrower bridges.
4) LOPEZGARCIA shall also review headwall structures at each end of the Overlook 'tunnel'. Retaining walls are discouraged in lieu of sloped embankments where possible. The headwall solution should be 'Geotech-friendly'.

With changes to maintenance road alignments and access points in the vicinity of the Parkway levee crossing north of Hampton Road, an exception can be made to the 15 foot vertical clearance requirement. A 3 foot clearance is acceptable at this location.

Action items	Person responsible	Deadline
✓ Review IH-35E ramp connection and Horiz/Vert alignment	Matt Craig	ASAP
✓ Review 'tunnel' maintenance access through Overlook embankment	Doug Guinn	ASAP
✓ Review Overlook 'tunnel' headwall structures	Doug Guinn	ASAP

Special notes:

Please notify the Note Taker within five (5) calendar days if there are any revisions or additions to these notes.

APPENDIX L

DETAILED SUPPORTING DATA

THIS PAGE INTENTIONALLY LEFT BLANK

Appendix L. Detailed Supporting Data

TABLE OF CONTENTS

APPENDIX L-1. Historical Context as it Relates to Cultural Resources

APPENDIX L-2. Planned Parks / Recreational Development within the Study Area

APPENDIX L-3. Surface Water Quality Monitoring Data

APPENDIX L-4. Reasonable Foreseeable Future Actions Considered in the Cumulative Effects Analysis

APPENDIX L-5. Indirect Land Use Analysis

APPENDIX L-6. Traffic Redistribution Analysis

APPENDIX L-7 Project Specific MTP and TIP Pages

THIS PAGE INTENTIONALLY LEFT BLANK

APPENDIX L-1

HISTORICAL CONTEXT AS IT RELATES TO CULTURAL RESOURCES

THIS PAGE INTENTIONALLY LEFT BLANK

Historical Context

The City of Dallas has a long and interesting history that has developed due to the vast expanses of land available to farmers, real estate speculators, and developers, as well as its location at the "Three Forks" of the Trinity River. The area was first visited by the Spanish as early as 1542 and was visited by other European explorers and trappers in the 17th, 18th, and early 19th centuries. Mexico governed Texas from the early 1820s to the mid-1830s. Texas declared independence from Mexico in 1836. Soon thereafter, settlers who were primarily from the southern U.S. began to come to Texas.

In 1839, settler John Neely Bryan followed the faint Indian trail from Arkansas to the "Three Forks" area of the Trinity River. Seeking fortune from speculative land sales, Bryan chose the area because of the confluence of the rivers' forks, a natural rock ford for crossing the river, and the intersection of two major Indian traces. He envisioned a town on a river with a navigable waterway giving access to the sea. Bryan laid out the 10-block town site now known as Dallas and began selling lots to settlers. He also established Bryan's Ferry to help the settlers and immigrants cross the river during high water events.

The construction of the National Central Road in 1844 created an overland connection from St. Louis to San Antonio that followed the old Indian Trail through Dallas. This positioned Dallas as an important landmark for settlers and immigrants. That same year, J.P. Dumas surveyed the town of Dallas in a one-half square mile pattern of blocks and lots to the east of the Trinity River, which further defined the town. In 1849, local efforts were begun to use the Trinity River for navigation and as a transportation channel to the sea. The first steamboat, *Job Boat No. 1*, arrived in Dallas on May 5, 1868 from Galveston. The boat sank on its second voyage to Dallas. However, it so enthused the citizens of Dallas that they built their own, the *Sallie Haynes*, and launched it on December 17, 1868. The boat sank about 40 miles down river a short time after.

The "iron horse" was beginning to make its way across the landscape of Texas in the late 1840s. The Galveston and Red River Railroad was incorporated in 1848 and efforts were underway to bring the railroad to Dallas. It would eventually be the first railroad to come to Dallas, but it would take another 24 years. The Galveston and Red River Railroad name was changed in 1856 to The Houston and Texas Central Railway.

In 1855, Alexander Cockrell and the Dallas Bridge and Causeway Company built Dallas' first permanent wooden bridge across the Trinity River, thereby further linking Dallas and Hoard's Ridge. The bridge was located approximately at the same site as the location of the current-day Commerce Street Viaduct. In 1856, Dallas was officially incorporated and the population had grown to 350.

By the 1860s and 1870s, Dallas was no longer a peaceful antebellum settlement, but rather had become a booming western frontier town. In 1872, an iron bridge replaced the wooden bridge across the Trinity, and the Houston and Texas Central Railway finally reached Dallas, establishing a direct connection to the sea. Dallas had become a sprawling railhead village and market for buffalo hides with a population of less than 3,000. In 1882, the County of Dallas purchased the iron bridge over the Trinity River for $42,000, and it became the first free bridge across the Trinity.

HOUSTON STREET VIADUCT ENTERING DALLAS (CIRCA 1920)

In 1884, Dallas' most famous architect, James E. Flanders, opened the first residential development west of the Trinity River, the Flanders Heights addition. It was situated near the current intersection of Sylvan Avenue and IH-30, but proved unsuccessful. Three years later, in 1887, Thomas Marsalis developed Oak Cliff as a residential suburb. It was reportedly named for the forested "cliffs" on the western edge of Trinity River bottoms. To connect this development with Dallas, Marsalis developed "The First Elevated Railway in the South," a railroad transit service over the Trinity River to connect Oak Cliff and Dallas. Oak Cliff was organized as a separate township in 1891 and was considered a part of greater Dallas by 1903, and the Winnetka Heights subdivision was platted in 1908 by Miller-Stemmons. Winnetka Heights was the last major subdivision platted in Oak Cliff. The Winnetka Heights subdivision is now a National Register Historic District.

The Cedars, one of the most exclusive and fashionable residential sections in the state, was established just south of the central business district in the early 1880s. The Colonial Hill subdivision, a NRHP Historic District, was established shortly after the City of Dallas expanded its city limits in 1890. By the decade between 1890 and 1900, the fashionable Cedars area had begun to turn to industrial development because the land was closer to the railroads and less prone to flooding.

In an effort to promote Dallas, The Trinity River Navigation and Improvement Company, incorporated in 1871, had the steamboat *Dallas* (the second to bear the name of the city) built in Galveston in 1892. On March 8, 1893, the company purchased the steam paddle wheeler *H.A. Harvey, Jr.* Once in Dallas, the boats' route ran from the Commerce Street tie-up 13 miles downstream to a dam. The public's interest in navigating the Trinity continued well into the 20th century. There were congressional committees and

appropriations toward the navigation of the Trinity in 1902 and 1904, and locks and dams were built downstream between 1905 and 1921. One of the last efforts was the formation of the Trinity River Canal Association in 1930, later named the Trinity Improvement Association. Another survey of the river was financed by a Public Works Administration grant. A report was made to Congress in 1940, but nothing came of it. Little has been done toward the Trinity River navigation effort since that time.

Things changed forever for Dallas in 1908. The Great Flood of 1908 left 4,000 people homeless, and the entire city was left without water, telephones and telegraph, and power, and all rail services were cancelled due to damaged bridges and tracks. The Trinity River Bridge was swept away, severing Dallas from Oak Cliff for over a week, and property damage was in the millions of dollars. Soon thereafter, George Kessler, a well-known city planner from Kansas City and native of Dallas, was hired by the Dallas City Plan and Improvement League to initiate a comprehensive plan that would include a way to vanquish the flooding of the Trinity River. The Kessler Plan, completed in 1911, was a massive scope of work in which he suggested that the river channel be straightened and that levees are built for flood protection. Elements of this plan are still being considered to this day, including a provision for a town lake and city harbor.

To reestablish the connection between Dallas and Oak Cliff, the Houston Street Viaduct was designed by Hedrick and Cochrane of Kansas City. Construction on the bridge was started on October 24, 1910, and it was completed on February 22, 1912 at a cost of $675,000. The bridge is listed on the NRHP. Its later sister bridges, crossing Corinth, Commerce, Continental, and Cadiz (now, northbound IH-35E) Streets, were constructed during a 3-year period from 1929 to 1931 with the intent to relieve congestion on the Houston Street Viaduct. The Southern Pacific, Santa Fe, and MKT Railroad Bridges that spanned the Trinity River were rebuilt after the 1908 flood, and they are also eligible for listing on the NRHP.

Dallas survived another devastating flood in 1913, which was not as destructive as the 1908 flood. However, the need for the Kessler Plan was all the more evident after the 1913 flood, and Dallas finally saw many of the recommendations of George Kessler come to fruition 13 years later. The City and County of Dallas Levee Improvement District approved the Ulrickson Bond Issue on July 26, 1926. Improvements for the Trinity River included $6,500,000 in bonds for constructing levees and straightening and moving the river channel; $3,339,500 for the construction of viaducts and other improvements; $5,000,000 by railroads and utilities in the district; and $3,500,000 by the City of Dallas bonds. On December 15, 1927, the City of Dallas voters approved the $23,900,000 Ulrickson Bond Issue, and on April 3, 1928, Dallas County voters approved the bond issue. The realization of these improvements came between 1928 and 1933, and the improvements remain an important factor in Dallas' success.

Another benefit of the Ulrickson Bond Issue was the construction of the Cadiz and Corinth Street Viaducts and the reclamation of the marshy bottomlands of the Trinity. The Cadiz Street Viaduct (now IH-35E northbound) was completed in 1932, and the Corinth Street Viaduct was completed in 1933. In 1933, the city-county improvement program reclaimed nearly 10,000 acres of bottomland for industrial uses.

The years of the Great Depression, between the approval of the Ulrickson Bond Issue and the beginning of World War II, were not as devastating to the Dallas economy as perhaps to the rest of the country. Between 1933 and 1940, Industrial Boulevard was built in the reclaimed valley to the east of the newly completed levees of the Trinity River. The location of Industrial Boulevard and the existence of hundreds of businesses that are so vital to Dallas' economy would not have been possible without the passage of the Ulrickson Bond Issue in the 1920s and the implementation of that portion of the Kessler Plan in the 1930s. The reclamation of that land made it possible to develop the industrial area that has held a major stronghold in the Dallas economy for seven decades. Land that was virtually unusable prior to the construction of the levees is now one of the most important manufacturing and distribution centers in the country and will likely be a vital part of the Dallas economy for decades to come.

To meet the growing needs of Dallas, Harland Bartholemew, a nationally recognized planner, was hired in 1943 to develop a new master plan for Dallas. The result was a $40 million bond package being developed to meet the plan's proposals. However, Dallas developed faster than the plan could be implemented. The end of World War II and the post-war boom that followed outdated the plan.

In the 1950s, Oak Cliff's prosperity reached its peak, and the post-war housing boom spawned multiple large housing developments and thousands of new businesses through the city. To meet the urban sprawl, a freeway system was designed and built during the mid-1950s. In 1952, Central Expressway (US-75) was built to the south near the old Colonial Hill Subdivision and to the north in 1954-56 along the old Houston and Texas Central Railway right-of-way. The Dallas freeway system was greatly expanded with the additions of the DFW Turnpike (IH-30 west of the Trinity River) and IH-35E (US-77 and IH-35E) in 1957. The addition of these freeways secured the future of industrial developments like the Brookhollow Industrial District for the remainder of the 20th century and well into the 21st century. The building of R.L. Thornton Freeway (IH-30 east of the Trinity River) began in 1959. This controversial freeway was badly needed, but its construction was responsible for dividing many of the city's older neighborhoods and destroying many of Dallas' historic homes and buildings that remained from the late 19th and early 20th centuries. The 1960s through the 1980s also saw many of Dallas' historic commercial buildings fall to the wrecking ball in favor of the construction of skyscrapers and new commercial developments.

APPENDIX L-2

PLANNED PARKS/RECREATIONAL DEVELOPMENT WITHIN THE STUDY AREA

THIS PAGE INTENTIONALLY LEFT BLANK

Planned Parks/Recreational Development within the Study Area

1959 Parks and Open Spaces Plan

This plan was published in 1959 and has served as the basic guide to the Dallas PARD ever since. The plan followed a long line of previous park plans, which include the Kessler Plan (1910), Urlickson Plan (1927), Woodruff Plans (1934), Hare and Hare Plans (1942), and Bartholomew, Hare, and Hare in 1944. Included in the various plans were proposals for a large park along the Trinity River in Dallas. The Parks and Open Spaces Plan of 1959 consolidated and expanded the previous proposals in light of the growing population and recreational needs of Dallas (City of Dallas, 1959).

1969 Coordinated Plan for Open Space Development of the Trinity River System

This plan (also known as the "Springer Plan") was published in 1969 by the Dallas Park Board. The plan presented concepts for recreational and open space development of the Dallas Floodway and adjacent floodplain areas. The developments proposed were in general conformance with the 1959 Parks and Open Spaces Plan. These included a proposed Trinity Park and open space system and "Town Lake" concept for the Dallas Floodway. Proposed recreational and related uses included golf, a model and motor area, athletics, tennis, two lake pools or "Town Lakes," a marina, and a system of trails (Dallas Parks Board, 1969).

As described in **Chapter 1 Need and Purpose for Action**, two major non-recreational uses were included in the Springer Plan for the Dallas Floodway. One was the proposed Trinity River Freeway, which was projected along the east levee in the vicinity of the Continental Avenue Viaduct, upstream to the Elm Fork, and then along the West Fork. The second important use of the Dallas Floodway was a navigation channel.

1980 Dallas County Open Space Plan

In 1980, the Dallas County Commissioners Court adopted its first Open Space Plan to evaluate and preserve naturally-significant and environmentally-sensitive open landscape. This plan identified two major landscape features as the basic components of the recommended Open Space Program. The 1980 plan resulted in the acquisition of 12 preserves in the County (Marvin Springer and Associates and Schrickel, Rollins, and Associates, 1980).

1991 Dallas County Open Space Plan

This plan was prepared to review and update the 1980 Dallas County Open Space Plan, which was the first official open space planning effort completed to evaluate and preserve the remaining landscape features in Dallas County. It is a comprehensive plan, consisting of both short-term, early implementation elements and long-term, broad-ranging actions that the county may consider and phase-in over time.

Dallas County has acquired land for open space preservation since 1977 through a series of funding mechanisms, including bond elections, state and federal grants, and private contributions. The long-term implementation of this open space plan proposes the additional acquisition of 60,000 to 65,000 acres of land for an approximate total of 95,000 to 100,000 acres of open space, which represents 16 to 17 percent of the Dallas County landscape. This plan includes the following key components within and/or adjacent to the study area:

- **Dallas Floodway/Greenbelt Park (Trinity Park).** This existing open space is the largest green space in central Dallas and encompasses a major portion of the study area. The plan proposes various types of potential recreational improvements, such as lakes, trails, and various recreational amenities. Also recommended are tree plantings, wetland enhancement areas, as well as active/passive recreational facilities. The plan indicates its nominal status as a greenbelt park and the existence of Trammell Crow Lake (Crow Lake) could be significantly augmented through the introduction of new landscape features consistent with flood and drainage management requirements of the USACE and City of Dallas. The plan suggests these improvements would significantly enhance the value of the Dallas Floodway corridor as a central feature for the elements of the city and county open space systems that radiate from it.

- **Old Trinity River Meanders.** The area is located in the northeast portion of the study area roughly between IH-35E and Irving Boulevard. Currently, the old river meanders serve as a network of flood control storage sumps. Their banks are bordered by warehouse and industrial facilities common to the area. The plan indicates the county's open space system as a whole, in particular downtown Dallas, could benefit from the salvaging and rehabilitation of the old channel as a river and corridor landscape. The Old Trinity Meanders would also serve as a connecting greenbelt between the Trinity River Greenbelt Park (Trinity Park), downtown Dallas, and other existing/planned parks and recreational areas within the study area and beyond. In addition, a habitat restoration component is being evaluated by the City of Dallas/USACE for this area.

- **West Dallas River Meanders Conservation Area.** This area is located in west Dallas in the northwest portion of the study area. This proposed conservation area is planned for lands adjacent to the old river meanders of the West Fork. The plan suggests these areas be replanted with floodplain trees, re-landscaped, and refitted with trails and natural water features compatible with the flood management functions of its drainage system. The intent is for the meanders and their adjacent re-naturalized lands to play a key role in the revitalization of the West Dallas neighborhood. The meanders conservation area would also serve as a central node in the planned trail systems by linking to other parks and trail systems through Dallas.

The USACE is currently designing an ecosystem restoration project for West Dallas River Meanders Conservation Area (i.e., Old Trinity River Channel Wildlife Restoration Project) (see **Section 3.5.7 Flood Plains and Flood Control Features**). This project may restore riparian and wetland vegetation along remnants of the West Fork channel. It would restore approximately 18.5 acres of wetlands and 82.9 acres of riparian forest. In addition, the USACE is designing a trail component compatible with planned trail systems described throughout this section of the SDEIS.

As currently proposed, this project would restore riparian and wetland vegetation along remnants of the West Fork channel adjacent to the existing Dallas Floodway. These areas along with interconnected small, excavated areas serve as the interior drainage system for the Dallas Floodway. The specific objective of the restoration project is to reestablish the bottomland hardwood, riparian forest, and emergent wetlands that originally existed in the project area. This would be accomplished through modification of the Pavaho (formerly Bickers Street) sump; construction of a water surface elevation control structure at the Westmoreland Road crossing; restoration of the lower Shadrack Creek channel by construction of an overbank wetland; planting of trees and shrubs along the old West Fork channel that are conducive to enhancing wildlife values; and regeneration of the littoral zone along the developed and modified wetlands to provide additional wildlife and fisheries values.

- **Cedar Creek Greenbelt**. This area is located along Cedar Creek in the southeast portion of the study area**.** The plan suggests that Cedar Creek could serve as the spine of a greenbelt linking Fivemile Creek (located outside of the study area) and the proposed Great Trinity Forest Park. The plan encourages completion of the greenbelt because the Dallas Zoo is on Cedar Creek, which would potentially aid visitation to the zoo and enhance its setting.

- **Trinity River State Park**. In 1983, the 68th Texas State Legislature approved authorization for the Trinity River State Park, but did not establish a funding source for its acquisition. The park's boundaries were defined as a 200-foot wide corridor of land on either side of the Trinity River from the AT&SF Railroad Bridge extending southward to IH-20. The 200-foot corridor was measured from the existing bank of the river. The enabling act also incorporated 1,400 acres of land on the east side of the river extending from Rochester Park south to an area adjacent to Jim Miller Road in south Dallas. As defined by the legislature, the park would have included approximately 1,500 acres of land.

  The Trinity River State Park was established under the jurisdiction of the TPWD as defined in Title 3, Chapter 22, Subchapter S, Section 22.251 of the Texas Parks and Wildlife Code. This

legislation includes provisions granting the TPWD the authority to acquire by purchase, gift, lease, or condemnation of land for the park, including mineral interests in that land. The TPWD may also expend funds for the operation and maintenance of the Trinity River State Park. In addition, the legislation included certain provisions for the City of Dallas. According to Subchapter S, Section 22.254 *Powers of City of Dallas*, the following provisions are indicated:

(a) Nothing in this Act shall preclude or prohibit the City of Dallas from initiating, developing, completing, extending, or maintaining any project, as described in Subsection (b) of this section, whether the project may be located within, or adjacent to the boundaries of the Trinity River State Park.

(b) For purposes of this section, the City of Dallas by ordinance or resolution of the governing body may approve and authorize any or all of the following:

(1) The development of a lake to be located within the floodplain of the Trinity River within the City of Dallas;
(2) The extension of Trinity River flood controls which shall include but not be limited to construction of drainage channels, swales, levees, and associated flood control appurtenances in the Trinity River floodplain which may be constructed and maintained within the boundaries of Trinity River State Park;
(3) The extension of Simpson Stuart Road at the point where it may cross the floodplain of the river; and
(4) The construction of swales in or adjacent to the natural channel of the Trinity River as necessary to provide offset capacity for full utilization of the McCommas Bluff Reclamation landfill.

(c) If the City of Dallas approves a project, as authorized by this section, the department shall grant the City of Dallas access to land within Trinity River State Park and whatever permissions are necessary in order to attain the purpose of the project.

In 1989, the Legislature once again addressed the park, authorizing the TPWD to set aside initial funding for land acquisition. However, progress on the park was slowed until concepts for the USACE's DFE project were resolved. Progress on the DFE led to the decision by TPWD in 1995 to prepare a master concept plan for the park. During this planning process, it was determined that the scope of the planning should not be limited to the narrow 200-foot wide definition of the

park. Instead, the decision was made to look at a much broader area and then focus on how the area's many resources and assets could best be combined with the original concept of preserving the forest and the Trinity River. As a result, the proposed Great Trinity Forest Park was established as the successor of the Trinity River State Park. Details concerning the planning efforts involved for the Great Trinity Forest Park are discussed in the following paragraphs (Dallas County Commissioners Court, 1991).

Moore Park Master Plan

Moore Park is located downstream of the Dallas Floodway at Cedar Creek and Eighth Street. The City of Dallas Park Board approved the Moore Park Master Plan on August 2, 2001 (City of Dallas, 2001b). This park was also identified in the *Trinity River Corridor MIP* (City of Dallas, 1999a) as a proposed neighborhood gateway leading into the Dallas Floodway park areas.

Great Trinity Forest Master Plan

In 1996, TPWD commissioned the design for major recreational development and preservation of over 6,000 acres of land extending from south of the Corinth Street Viaduct to IH-20 near the southern limits of the City of Dallas. This master planning effort was built upon many previous studies and plans for the Trinity River corridor. These include planning efforts by the TRCCC, NCTCOG, City of Dallas, Dallas County, and the USACE. It is designed to work within the context of these plans, such as the USACE's proposed "chain of wetlands," which would improve flood control, and the Trinity Parkway (proposed action), which would improve access along the upper end of the corridor. The plan includes a program of uses grouped into six broad categories:

1. Land management activities (e.g., reclamation, reforestation, and preservation);
2. Passive recreation activities (e.g., bird watching, picnicking, camping, and fishing);
3. Education activities (e.g., children's day camps, historic/cultural exhibits, and interpretive centers);
4. Active recreation (e.g., canoeing/kayaking, hiking/biking, and horseback riding);
5. Economic development activities (e.g., concessions, equestrian/canoe rentals, and recreational vehicle camping); and
6. Special events (e.g., festivals, outdoor art exhibits, and community gatherings).

The Great Trinity Forest Park is intended to be an "umbrella" designation, which would encompass both existing parks and other new areas with significant preservation of recreation assets. These areas would be grouped together if they contained either portions of the Great Trinity Forest or if they bounded the river south of the Dallas Floodway. In other words, they would be treated as "parks within a park." Two existing parks within the study area would be included under the "umbrella" of the Great Trinity Forest Park. These are Moore Park located adjacent to the southern boundary of the Dallas Floodway, and

Rochester Park located along the Trinity River and adjacent to IH-45 in the southern portion of the study area (see **Figure L-1**).

FIGURE L-1. GREAT TRINITY FOREST MASTER PLAN

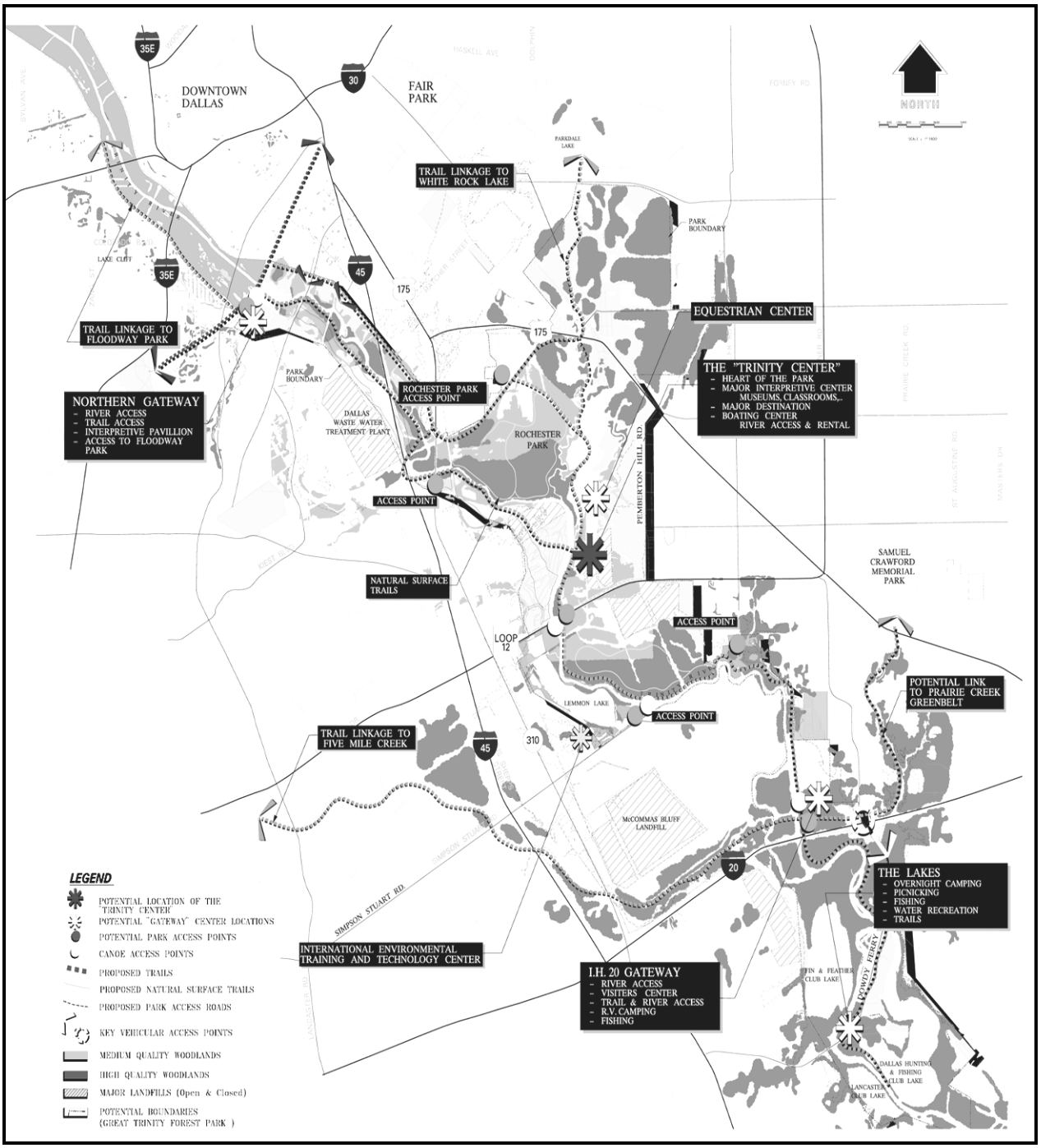

Source: TPWD, 1997.

The first phase of the Master Plan involves acquisition of lands not owned by the City of Dallas. In addition, the DFE project by the USACE must acquire 1,179 acres of land within the Great Trinity Forest as a requirement for mitigation. In 1998, the City of Dallas purchased 208 acres of land near IH-20 and the Trinity River as part of the initial effort to begin land acquisitions. As of January 2004, approximately 220 acres had been acquired for environmental mitigation and hydraulic conveyance for the DFE. Real estate acquisition, relocations, and utilities work by the city is ongoing.

Trinity River Corridor MIP/BVP

The City of Dallas' *MIP*/*BVP* (1999a and 2003a) identifies several park and recreational developments, many of which are located within the Trinity Parkway study area. These are shown graphically on **Plate 3-4** at the end of this chapter. Portions of this plan are also considered coordinated planning efforts along with the Trinity Parkway (see **Section 3.1.1.4**). The following points provide a summary of the planned park and recreation improvements identified as part of the city's *MIP*/*BVP*:

- Parks and Recreation – Dallas has the opportunity to create what could become the largest urban park in the nation. A Trinity Central Park within the Dallas Floodway would combine scattered recreational facilities into one system, totaling thousands of acres. Regional open space including the West Fork, the Elm Fork, the Great Trinity Forest and trail systems such as the Katy, Buckeye, and Santa Fe Trails would all be anchored and enhanced. The park area within the Dallas Floodway would total approximately 2,000 acres and, with the Great Trinity Forest and Elm Fork areas, becomes a park of over 6,000 acres. Major components of the parks and recreation activities may include:

  Lakes and Water Features

  - Two off-channel stepped lakes totaling approximately 150 acres adjacent to downtown with an additional 25 acres of wetlands along the lake edge.
  - A downstream bi-channel system creating a "braided" river channel: totaling 60 acres with an additional 45 acres of wetlands.
  - An off-channel lake in west Dallas totaling approximately 80 acres with an additional 65 acres of wetlands.
  - Lake recreation, both active and passive, including canoeing, sailing, rowing, and fishing.
  - Protected with berms that provide 2-year flood protection.
  - Between-lakes waterfalls, pedestrian overlooks, and wildlife viewing areas.
  - Lakeside hard-edge promenade at downtown and soft edge riparian habitat elsewhere.

  Playing Fields

  - 160 acres of playing fields including soccer and softballs fields. Fields are accessed from an internal park road system.

- Irrigation from CWWTP.

Event/Concession Spaces

- 12-acre amphitheater of sloped turf and stage structure with utilities.
- Two concession pads for seasonal or permanent use.
- One floating restaurant pad at Upper Trinity Lake (potential if concession interest).
- One recreational building near playing fields.

Boat Launches

- Car-top boat launches at Westmoreland and Corinth Street.
- Trailer-boat access at Sylvan and at Urban Lake for larger boats.

Vehicular Access Points

- 5 miles of internal park roads running the length of the park. Access points to park road at Canada Drive, Westmoreland, Hampton, Sylvan, Continental, Commerce, Reunion, Houston, and Corinth Streets.
- 6-7 acres of parking areas within the Dallas Floodway for park users.

Trails and Paths

- 4,500-foot-long promenade at downtown.
- 9 miles of trails with a variety of surfaces.
- 3 miles of equestrian trails within the Dallas Floodway (surface to be determined).
- 5,000 feet of wetlands boardwalks for nature viewing and access.

Pedestrian Access Points

- One 600-foot-long pedestrian plaza overlooking the lakes and park at Reunion.
- Widened pedestrian connections at other locations along the downtown levees.
- Continuous pedestrian access of parkland via Oak Cliff Levee-top road with on-street parking.
- 20 new pedestrian/bicycle access points including eight over the Trinity Parkway.
- Four vertical connector stairs/ramps added to historic viaducts at Continental, Commerce, Houston, and Corinth Street.

Open Space Connections

- On-street trail connections to Turtle Creek, Katy Trail, and Bernal Trail.
- MLK bike route from Trinity to Fair Park and proposed veloway.
- Equestrian/pedestrian trail to Trinity Interpretive Center/Equestrian Center.
- On-street connection to Oak Cliff Founders Park.

The *MIP*/*BVP* includes provisions for implementing various components of the *Great Trinity Forest Master Plan*, which were funded as part of the city's 1998 bond program. These include:

- Great Trinity Forest land acquisition;
- Trinity Interpretive Center;
- Equestrian Center; and
- Trinity Forest Trails.

Dallas Floodway Extension EIS

The USACE included preparation of a recreation master plan as part of the DFE FEIS project. This plan is designed to meet the existing needs for passive and non-structured recreational activities within the TPWD Region 4 service area and to address state and regional shortfalls in facilities for walking, hiking, cycling, and jogging as identified in the 1990 Texas Outdoor Recreation Plan (TORP) prepared by the TPWD.

Facilities proposed within the DFE study area would provide public access, protect sensitive environmental resources, and promote safe use of the area. The plan creates linkages between existing recreational and public open space areas, both existing and necessary for the DFE project. The plan is consistent with the locally adopted recommendations for long-range development of the Great Trinity Forest Park within the DFE project area. The USACE adopted many of the recommendations of the Great Trinity Forest Master Plan, including land acquisition, construction of trails and canoe launches, and implementation of an interpretive center in the forest. The City of Dallas in cooperation with the USACE has purchased several additional tracts of land within the Trinity River floodplain for habitat mitigation and park uses (USACE, 1999).

Trinity Trails System

The Trinity Trails concept is the result of extensive planning efforts conducted by various local, state, and federal agencies since 1991. Since 1996, the Trinity Trails Advisory Committee (TTAC) has been working toward development of this project. The Trinity Trails System is consistent with the recommendations of other significant trail plans, including the *Dallas County Trail Plan*, NCTCOG's MTP (*Mobility 2030*), the TPWD's *Great Trinity Forest Master Plan*, and the City of Dallas' *Trinity River Corridor MIP/BVP*. The Trinity Trails plan provides recommended routes and policies to guide trail design and implementation.

The purpose of the Trinity Trails System is to establish a corridor that would be a continuous strip of land, which can accommodate hike/bike, equestrian, and/or nature trails and serve as the primary link for recreational opportunities within a "world-class" Trinity River Greenway. Trails within the corridor spine,

and connecting spurs, would provide alternate transportation routes to parks, schools, shopping areas, and work.

This planned system of trails radiates from the confluence of the West Fork, Elm Fork, and Main Stem of the Trinity River. The 125-mile northward spine, referred to as Dalhoma, is planned to extend along the Elm Fork to Lakes Lewisville and Ray Roberts, then along major highway and rail corridors to Lake Texoma at the Oklahoma border. The 50-mile southeastern spine initially extends along the Trinity to the Dallas/Ellis County line, but could eventually reach the Gulf of Mexico. The 75-mile western spine extends along the West Fork to Lakes Benbrook and Eagle Mountain, and may eventually extend farther west (NCTCOG, 1998).

Dallas County Trail Plan

LOCAL HIKE AND BIKE TRAIL

In 1996, Dallas County began this initiative for a large-scale, countywide recreation trails network that would link to the Trinity Trails System. The plan proposes a logical network of over 480 miles of potential non-motorized, environmentally friendly thoroughfares for pedestrian/bicycle use and enjoyment. Trails in Dallas County that intersect the Trinity Trails System may be along waterways, railways, utility corridors, or roadways. Over 335 miles of the total network are hard-surface trails with over 145-miles proposed as soft-surface trails, creating connections countywide. The Dallas County Commissioner's Court adopted this plan on March 18, 1997.

The *Dallas County Trail Plan* includes an extensive network of trails within the Trinity River corridor, with 3.5 miles of trails designed for environmentally sensitive areas, 7 miles of soft-surface trails, and 26 miles of hard-surface trails with pedestrian bridges across the river. The bicycle and pedestrian facilities proposed are part of the plan and include segments of the Great Trinity Trail, Bernal Trail, Fair Park Trail, Trestle Trail, and the Katy Trail (see **Table L-1**). This component is proposed to include approximately 45 miles of off-road trails and 20 miles of on-road facilities (Dallas County Commissioners Court, 1997).

Regional Veloweb

A "veloweb" is an interconnected network of off-street, hard-surface trails designed to provide safe, efficient mobility opportunities to high-speed bicycle commuters. The purpose of a veloweb is to provide

interregional routes, which favor bicycle travel to encourage increased use of the bicycle for utilitarian trip purposes.

The regional veloweb was developed and recommended by the NCTCOG as part of the bicycle/pedestrian component of the *Mobility 2025 – April 2005 Update*. The proposed bicycle/pedestrian facilities within the study area were incorporated into the *Mobility 2025 – April 2005 Update* based on recommendations included in the TxDOT TPC MTIS, and is carried forward in the current MTP, *Mobility 2030*. Planned veloweb trails within the study area included the Great Trinity Trail, the Trestle Trail, and the Katy Trail (NCTCOG, 2005b).

Table L-1 provides a summary of the proposed trails within the study area that may potentially be affected by the Trinity Parkway alternatives.

TABLE L-1. PROPOSED TRAILS WITHIN THE STUDY AREA

PROPOSED TRAIL	DESCRIPTION	TYPE/FUNCTION	TRAILS LINKED	COMMENTS
Trinity Park Trail	Follows south side of river in Dallas Floodway to the Great Trinity Forest. Extends beyond study area boundaries.	Hike and Multi-Use	Links to trail system in Dallas Floodway and Great Trinity Forest.	Hard surface, off street.
Bernal/Canada Drive Trail	From existing Bernal Trail along old West Fork meanders in Oak Cliff to Dallas Floodway. Extends beyond study area boundaries.	Hike and Bike	Links with Cockrell Hill Trail and with trail system in Dallas Floodway.	Hard surface, off street.
Old Trinity Trail	Follows old river channel meanders near and across IH-35E and Industrial. Extends beyond study area boundaries.	Hike and Bike	Cockrell Hill, Turtle Creek, and Katy Trails (outside of study corridor).	-Hard surface, off street. -Friends of Old Trinity Trail, a local non-profit organization, has been active in helping establish phase 1 of this trail.
Coombs Creek Trail	Originates from Oak Cliff and merges with Great Trinity Trail near Houston and Jefferson Viaducts. Terminates at Trestle Trail junction. Extends beyond study area boundaries.	Hike and Bike	Links with trail system in Dallas Floodway.	Hard surface, off street.
Continental Avenue Pedestrian Bridge	Conversion of existing bridge from vehicular use to pedestrian use only.	Pedestrian with bicycle access at north and south ends.	Links with trail system in Dallas Floodway.	-Hard surface, off street. -Provides access to proposed central community park and to large civic lake area.
Trestle Tail	Follows the DART ROW east of the Trinity then crosses the river on the Old AT&SF Railroad Bridge into Oak Cliff. Extends beyond study area boundaries.	Hike and Bike	Links with trail systems in Dallas Floodway and Great Trinity Forest.	-Hard surface, off street. -Part of Veloweb. -Projected to be region's second most highly used commuter trail.

TABLE L-1. PROPOSED TRAILS WITHIN THE STUDY AREA

PROPOSED TRAIL	DESCRIPTION	TYPE/FUNCTION	TRAILS LINKED	COMMENTS
Great Trinity Trail	Follows along Dallas Floodway from confluence to the Great Trinity Forest. Extends beyond study area boundaries.	Includes a network of trails/access points in the Dallas Floodway for numerous user groups – walkers, bicyclists, skaters, equestrians, and canoeists.	Links with trail systems in Dallas Floodway and Great Trinity Forest. Also, Cockrell Hill, Coombs Creek, Katy, Trestle, and Bernal/Canada Drive Trails.	-Hard surface, off street. -Part of Veloweb.
Katy Trail (south extension)	Follows Houston Street south to Oak Cliff across the Houston Street Viaduct. Extends beyond study area boundaries.	Hike and Bike	Links with trail system in Dallas Floodway.	-Hard surface, off street. -Part of Veloweb. -Projected to be region's most highly used commuter trail.
Cockrell Hill Trail	From south side of Trinity River near Hampton Road through West Dallas to Cockrell Hill community. Extends beyond study area boundaries.	Hike and Bike	Links with trail system in Dallas Floodway.	Hard surface, off street.
Trinity River	Follows river channel. Extends beyond study area boundaries.	Water trail for canoes/kayaks	Links with Elm/West Forks, and other water bodies outside of study corridor.	Proposed canoe access sites at Sylvan, Corinth, and IH-45.
Dallas Floodway - Soft-Surface Trails	Located in areas with little tree cover on the west or south side of the river away from pedestrian areas.	Equestrian and Bike	Links with trail system in Dallas Floodway and Great Trinity Forest.	Proposed 30-horse equestrian center in Dallas Floodway near Houston/ Jefferson Viaducts.
Great Trinity Forest - Soft-Surface Trails	Located in DFE area along river and proposed chain-of wetlands. Extends beyond study area boundaries.	Equestrian, Nature, and Bike	Links with trail system in Dallas Floodway and Great Trinity Forest.	Proposed 50-horse equestrian center near Loop 12.
DALLAS FLOODWAY – LEVEE TOP TRAILS				
Stemmons Trail	From Westmoreland to Commerce (east levee)	Pedestrian	Links to proposed levee top promenades and trail system in Dallas Floodway.	Hard surface, off street.
West Dallas Trail	From Westmoreland to Commerce (west levee)	Pedestrian	Links to proposed levee top promenades and trail system in Dallas Floodway.	Hard surface, off street.
Cedars Trail	From IH-35E to Corinth (east levee)	Pedestrian	Links to proposed levee top promenades and trail system in Dallas Floodway.	Hard surface, off street.
Bottoms to Corinth	From IH-35E to Corinth (west levee)	Pedestrian	Links to proposed levee top promenades and trail system in Dallas Floodway.	Hard surface, off street.
Sources: City of Dallas, 1999a; Dallas County Commissioners Court, 1997. **Note**: Proposed trails include proposed, endorsed, and sponsored trails.				

These planned trail projects are being coordinated with the proposed action and most would not proceed until a preferred alternative for the Trinity Parkway has been identified.

Trinity River Boat Ramps, Access Roads, and Parking Areas

The City of Dallas obtained grant funding from the TPWD for the design and construction of two boat ramps and associated access roads and parking areas. Both boat ramps have been constructed. One is located within the Dallas Floodway just downstream of Sylvan Avenue adjacent to Crow Lake. The second boat ramp is located under the Loop 12 Trinity River Bridge in South Dallas.

Development of a system of parks, recreational areas, and linear trails along the Trinity River is an integral portion of the NCTCOG's COMMON VISION (2001d) work program. NCTCOG has identified the Trinity River Corridor as a "unique regional resource." The value of this resource is increased because of its location within the growing DFW metropolitan area. The NCTCOG is pursuing a Trinity Greenbelt of major parks linked by a regional trail system. It is the intent of the NCTCOG to implement a "world class" Trinity Greenbelt strategy.

2002 A Renaissance Plan for Dallas Parks and Recreation in the 21st Century

This plan was published in August 2002 by the Dallas PARD. The overall purpose of the plan is to develop an "innovative, interactive, creative, environmentally sensitive, and state-of-the-art" long-range development plan for the PARD over the next 10 to 20 years. The plan includes a Capital Implementation Plan organized according to the six park maintenance districts across the city. These Park District Action Plans present proposed capital improvements for each park based upon the top ten facility needs identified in a citizen survey. Proposed capital improvements for existing parks and recreational areas in the study area include a variety of recreational improvements. These include playgrounds, hike/bike/walk trails, outdoor swimming pools, sport facilities (e.g., soccer, basketball, and baseball), picnic facilities, recreation centers, senior facilities, and facilities for the disabled (City of Dallas, 2002b). Phase 1 of the Renaissance Plan was completed in 2005.

THIS PAGE INTENTIONALLY LEFT BLANK

APPENDIX L-3

SURFACE WATER QUALITY MONITORING DATA

THIS PAGE INTENTIONALLY LEFT BLANK

Surface Water Quality Monitoring Data

The following table includes analytical results as provided by the TCEQ, Texas CRP (TCEQ, 2007c) for key sampling parameters from 2004 sampling events conducted for Segment 0805 at monitoring station 10937, located near the upstream end of the Trinity Parkway study area. The Texas CRP is a state fee-funded program for water quality monitoring, assessment, and public outreach. The CRP is a collaboration of 15 partner agencies and the TCEQ. The CRP provides the opportunity to approach water quality issues within a watershed or river basin locally and regionally through coordinated efforts among diverse organizations. Sampling data is available online as part of the TCEQ database of quality-assured surface water quality monitoring data.

TABLE L-2. 2004 SAMPLING RESULTS FROM STREAM SEGMENT 0805, STATION 10937 (TRINITY RIVER AT NORTH WESTMORELAND)

Parameter	Criteria (min. / max. values)	Feb.	March	April	May	June	July	Aug.	Sept.	Oct.	Nov.	Dec.
Water Temperature (°C)	1.0 / 38.0	10.8	15.8	18.2	20.1	25.6	27.6	27.9	26.2	21.8		13.9
Air Temperature (°C)	-15.0 / 45.0	16		16	22	33	31	34	28	23		21
Stream Flow (CFS)	.01 / 15000.0	955	1800	909	2900	1110	6260	4270	2930	5260		6320
Transparency (m)	.0099 / 7.0	0.33	0.15	0.19	0.13	0.04	0.15	0.12	0.08	0.04		0.19
Specific Conductance (umhos/cm@25c)	30.0 / 60000.0	610	550	740	480	370	410	410	440	380		390
Dissolved Oxygen (mg/l)	.50 / 15.0	10.6	9.8	8.5	8.6	6.7	7.5	8	7.2	8.9		10.4
pH (SU)	5.0 / 10.0	7.7	7.9	7.7	7.8	7.7	7.6	7.8	7.6	7.8		7.9
Total Nitrogen, Ammonia (mg/l as N)	.005 / 3.0	0.03	0.03	0.07	0.08	0.08	0.02	0.12	0.04	0.08		0.02
Nitrite Nitrogen (mg/l as N)	.005 / .54	0.02	0.02	0.03	0.02	0.03	0.02	0.03	0.03	0.02		0.02
Nitrogen, Kjeldahl (mg/l as N)	.05 / 4.2	1		0.8		1.4		0.8	0.9	2.1		0.7
Nitrite plus Nitrate (mg/l as N)	.005 / 12.8	4.13	2.55	7.21	1.75	1.43	0.94	1.48	3.25	1.71		1.26
Phosphorus (mg/l as P)	.005 / 3.09	0.78	0.44	1.18	0.33	0.73	0.28	0.33	0.62	0.7		0.17
Orthophosphate Phosphorus (mg/l)	.002 / 2.51	0.74	0.37	1.14	0.24	0.19	0.09	0.15	0.41	0.16		0.14
Hardness (mg/l as caco3)	12.0 / 2625.0	192	172	184	168	164	142	138	136	212	136	130
Flow (1-no, 2-low, 3-normal, 4-flood, 5-high)	1 / 6	3	3	3	5	5	5	5	5	5	5	5
E. Coli, Colilert, Idexx method (mpn/100ml)	.90 / 100000.0	65	922	85	870	24200	120	32	3106	8160	4350	109
Chlorophyll-A (ug/l)	.00 / 50.0	3.5	18.2	6.3			21.6	14	9	10	12	8.6
Days since precipitation event (days)	0 / 75	2	4	1	2	1	5	7	1	1	1	1

Source: TCEQ, 2007c
Notes:
°C – degrees Centigrade
CFS – cubic feet per second
m – meters
umhos/cm@25c - micromhos/centimeter
mg/l – milligrams per liter
SU – standard units
mpn/100ml - most probable number per 100 milliliters
ug/l - micrograms per liter

THIS PAGE INTENTIONALLY LEFT BLANK

APPENDIX L-4

REASONABLY FORESEEABLE FUTURE ACTIONS CONSIDERED IN THE CUMULATIVE EFFECTS ANALYSIS

THIS PAGE INTENTIONALLY LEFT BLANK

Introduction

This appendix provides information about the anticipated effects to resources within the Trinity River Corridor from reasonably foreseeable future transportation projects (**Table 4-57A**) and land development projects (**Table 4-58A**). The projects outlined correspond with the projects listed in **Tables 4-57 and 4-58** in the Cumulative Impacts Analysis, respectively, and corresponding figures in **Chapter 4** showing approximate project locations. The acreage totals for indicators of resource impacts in **Table 4-59** represents the totals shown in the tables below for the following impacts: land converted to transportation right-of-way; woodlands; grass areas; waters of the U.S., including wetlands; cultural resources, including historic properties and archeological sites; visual impacts; and parks.

TABLE 4-57A. REASONABLY FORESEEABLE ACTIONS - TRANSPORTATION PROJECTS

Map ID[1]	Project Name & Agency	Description	Location[2]	Anticipated Resource Effects[2]
A	Project Pegasus (IH-30) Canyon/(IH-30 / IH-35E) Mixmaster/(IH-35E) Lower Stemmons Improvements TxDOT/City of Dallas	Includes total reconstruction of the Canyon/Mixmaster interchange, Lower Stemmons segment (including the IH-35E/DNT connection), and the installation of a continuous HOV system through the Canyon. Also provides for the rehabilitation of the Houston Street viaduct.	Improvements total approximately 11 miles in length along existing highway corridors. Project is within the Trinity River Corridor, and also partially within the Trinity River floodplain.	• **Land use** – results in the conversion of approximately 73 acres of land to transportation right-of-way, a minimal change in the availability of developable land, and approximately 22 total displacements. A short-term increase in noise (associated with construction) would be anticipated with minimal long-term increase in noise associated with traffic. • **Environmental Justice** – 3 residential displacements are likely to occur inside the Trinity Parkway Study Boundary within Census Tract 41, Block Group 1. • **Water resources** – potential effect to approximately 1 acre of waters of the U.S., including wetlands (mitigation to be developed once details are known), no effect to the 100-year floodplain, no effect on SPF valley storage, and no effect on water quality. • **Air quality** – no substantial effect to air quality is expected. The project would be required to be consistent with a TIP and MTP that conform to the SIP. • **Cultural resources** – no effect on prevailing historical buildings, bridges, or districts. Provides for rehabilitation of the Houston Street viaduct under mitigation agreement with the THC; no archeological impacts are likely due to highly urbanized development within surrounding area. • **Parks/recreation areas** – requires conversion of approximately 1 acre of Stemmons Park for right-of-way. • **Biological resources** – no substantial effect to high quality woodland habitats or maintained grass areas. • **Visual impacts** – little change to visual aesthetics.

TABLE 4-57A. REASONABLY FORESEEABLE ACTIONS - TRANSPORTATION PROJECTS

Map ID[1]	Project Name & Agency	Description	Location[2]	Anticipated Resource Effects[2]
B	The Southern Gateway – IH-35E/US-67 Improvements TxDOT/City of Dallas	MIS/EA to address transportation deficiencies along the IH-35E/US-67 corridor (the Southern Gateway) to meet the long-term needs in southern Dallas County. Project limits extend from IH-35E south of the CBD to IH-20 and along US-67 from IH-35E to FM-1382 in southern Dallas County.	Improvements total approximately 19 miles in length along existing highway corridors. Less than 1.0 mile within the Trinity River Corridor. Project would not be within the Trinity River floodplain.	• **Land use** – no additional land required for transportation right-of-way, no substantial change in the availability of developable land, and no displacements anticipated. A short-term increase in noise (associated with construction) would be anticipated with minimal long-term increase in noise associated with traffic. • **Environmental Justice** – no residential displacements are expected to occur. • **Water resources** – no anticipated effect to waters of the U.S., including wetlands, no effect to the 100-year floodplain, no effect on SPF valley storage, and no effect on water quality. • **Air quality** – no substantial effect to air quality is expected. The project would be required to be consistent with a TIP and MTP that conform to the SIP. • **Cultural resources** – no effect on prevailing historical buildings, bridges, or districts. 10th Street Historic District adjacent, but no anticipated effects; no archeological impacts are likely due to highly urbanized development within surrounding area. • **Parks/recreation areas** – no effect to prevailing parks/ open space in the area. • **Biological resources** – no substantial effect to high quality woodland habitats or maintained grass areas • **Visual impacts –** little change to visual aesthetics.
C	Woodall Rodgers Freeway Extension (Spur 366) including Margaret Hill Hunt Bridge TxDOT/City of Dallas	New bridge crossing over Trinity River from CBD to Singleton Boulevard. Improvements at Industrial Boulevard. Project design includes "signature" bridge concept (long-span arch).	Project is within the Trinity River Corridor and within the Trinity River floodplain.	• **Land use** – results in the conversion of approximately 30 acres of land to transportation right-of-way, a minimal change in the availability of developable land, and approximately 3 non-residential displacements. A short-term increase in noise (associated with construction) would be anticipated with no long-term increase. • **Environmental Justice** – no residential displacements are expected to occur. • **Water resources** – potential effect to approximately .10 acre of waters of the U.S., including wetlands (no mitigation proposed), no effect to the 100-year floodplain (placement of structural supports only), no effect on SPF valley storage, and no effect on water quality. • **Air quality** – no substantial effect to air quality is expected. The project would be required to be consistent with a TIP and MTP that conform to the SIP. • **Cultural resources** – no effect on prevailing historical buildings, bridges, or districts in the area; potential archeological artifacts may be uncovered during construction within floodway. • **Parks/recreation areas** – no effect to prevailing parks/ open space in the area. • **Biological resources** – approximately .50 acre of riparian woodland potential affected and no substantial effect to maintained grass areas. • **Visual impacts –** effect on visual aesthetics will occur due to unique architectural design of signature bridge.

TABLE 4-57A. REASONABLY FORESEEABLE ACTIONS - TRANSPORTATION PROJECTS

Map ID[1]	Project Name & Agency	Description	Location[2]	Anticipated Resource Effects[2]
D	IH-30 (Trinity River) Bridges TxDOT/City of Dallas	Bridge replacement project. Bridges are considered candidates for "signature" design concept.	Project is entirely within the Trinity River Corridor and also within the Trinity River floodplain.	• **Land use** – likely no conversion of land to transportation right-of-way, no substantial change in the availability of developable land, and no displacements. A short-term increase in noise (associated with construction) would be anticipated with no long-term increases anticipated. • **Environmental Justice** – project not located within the RSA used for evaluating cumulative impacts to minority and/or low income populations from residential displacements and the loss of affordable housing. • **Water resources** – no anticipated effects to waters of the U.S., including wetlands. No effect to the 100-year floodplain, no effect on SPF valley storage, and no effect on water quality. • **Air quality** – impacts to air quality would be insignificant. • **Cultural resources** – no effect on prevailing historical buildings, bridges, or districts; potential archeological artifacts may be uncovered during construction within floodway. • **Parks/recreation areas** – likely no effect to prevailing parks/open space in the area. • **Biological resources** – no anticipated effect to high quality woodland habitats or maintained grass areas. • **Visual impacts –** effect on visual aesthetics likely occur due to unique architectural design of signature bridges.
E	SH-183 from SH-360 to IH-35E – West Fork Corridor Improvements TxDOT/Cities of Dallas and Irving	MIS/EA to address transportation deficiencies along the SH-183/West Fork corridor. Project limits extend from IH-35E to SH-360 in eastern Tarrant County. Improvements to SH-183 include main lane widening and the installation of a continuous HOV system connecting to IH-35E. The MIS also recommended a new "West Fork Reliever Road" be constructed from SH-360 to the proposed Trinity Parkway at Hampton Road.	Project is approximately 12.5 miles in length. Approximately 2.0 miles of the project is in the Trinity River Corridor. Project is partially within the Trinity River floodplain.	• **Land use** – results in the conversion of approximately 1 acre of land to transportation right-of-way, a minimal change in the availability of developable land, and approximately 2 non-residential displacements. A short-term increase in noise (associated with construction) would be anticipated with minimal long-term increases associated with traffic. • **Environmental Justice** – project not located within the RSA used for evaluating cumulative impacts to minority and/or low income populations from residential displacements and the loss of affordable housing. • **Water resources** – no anticipated effect to waters of the U.S., including wetlands, no effect to the 100-year floodplain, no effect on SPF valley storage, and no effect on water quality. • **Air quality** – no substantial effect to air quality is expected. The project would be required to be consistent with a TIP and MTP that conform to the SIP. • **Cultural resources** – no effect on prevailing historical buildings, bridges, or districts; no archeological impacts are likely due to highly urbanized development within surrounding area. • **Parks/recreation areas** – requires conversion of approximately 1 acre to right-of-way for bridge crossing the Elm Fork. • **Biological resources** – approximately 4 acres of riparian woodlands at the Elm Fork potentially affected. Possible 4 acre (approximately) mitigation likely within the study area but outside the Trinity River Corridor. • **Visual impacts –** little change to visual aesthetics.

TABLE 4-57A. REASONABLY FORESEEABLE ACTIONS - TRANSPORTATION PROJECTS

Map ID[1]	Project Name & Agency	Description	Location[2]	Anticipated Resource Effects[2]
F	Houston Street Viaduct TxDOT/City of Dallas	Transportation enhancement project involving the repair, rehabilitation, and subsequent preservation of this NRHP-listed bridge.	Project is within the Trinity River Corridor and within the Trinity River floodplain.	• **Land use** – no additional land required for transportation right-of-way, no change in the availability of developable land, and no displacements. A short-term increase in noise (associated with construction) would be anticipated with no long-term increases anticipated. • **Environmental Justice** – project not located within the RSA used for evaluating cumulative impacts to minority and/or low income populations from residential displacements and the loss of affordable housing. • **Water resources** – no anticipated effect to waters of the U.S., including wetlands, no effect to the 100-year floodplain, no effect on SPF valley storage, and no effect on water quality. • **Air quality** – no effect anticipated. • **Cultural resources** – no effect on prevailing historical buildings, bridges, or districts. Houston Street viaduct placed on the NRHP in 1984, all repairs/renovations coordinated with SHPO to insure no adverse effects; potential archeological artifacts may be uncovered during construction within floodway. • **Parks/recreation areas** – no effect to prevailing parks/ open space in the area. • **Biological resources** – no effect to high quality woodland habitats or maintained grass areas. • **Visual impacts –** little change to visual aesthetics.
G	Corinth Street Viaduct TxDOT/City of Dallas	Bridge expansion project involving the construction of an adjacent, parallel structure and preservation of the existing NRHP-eligible bridge.	Project is within the Trinity River Corridor and within the Trinity River floodplain.	• **Land use** – results in the conversion of approximately 0.5 acre of land to transportation right-of-way, no change in the availability of developable land, and 2 non-residential displacements. A short-term increase in noise (associated with construction) would be anticipated with minimal long-term increases anticipated. • **Environmental Justice** – no residential displacements are expected to occur. • **Water resources** – anticipated impact to approximately 1.5 acres of previously disturbed emergent wetlands, 0.5 acre of jurisdictional waters. Effects anticipated as being temporary with no permanent fill in the Trinity River or in wetlands. No mitigation anticipated. No anticipated effect to the 100-year floodplain (placement of structural supports only), no effect on SPF valley storage, and no effect on water quality. • **Air quality** – potential impacts to air quality would be insignificant. • **Cultural resources** – no effect on prevailing historical buildings, bridges, or districts. Corinth Street Bridge is listed on the NRHP. THC concludes that the historical importance is not sufficient to preclude its removal; potential archeological artifacts may be uncovered during construction within floodway. • **Parks/recreation areas** – no effect to prevailing parks/ open space in the area (temporary construction easement if necessary). • **Biological resources** – no anticipated effect to high quality woodland habitats or maintained grass areas. • **Visual impacts –** little change to visual aesthetics.

TABLE 4-57A. REASONABLY FORESEEABLE ACTIONS - TRANSPORTATION PROJECTS

Map ID[1]	Project Name & Agency	Description	Location[2]	Anticipated Resource Effects[2]
H	Continental Avenue Viaduct TxDOT/City of Dallas	Planned conversion of this NRHP-eligible bridge to a "pedestrian only" facility after the Woodall Rodgers Freeway Extension is completed.	Project is within the Trinity River Corridor and within the Trinity River floodplain.	• **Land use** – no additional land required for transportation right-of-way, no change in the availability of developable land, and no displacements. A short-term increase in noise (associated with construction) would be anticipated with no long-term increases anticipated. • **Environmental Justice** – no residential displacements are expected to occur. • **Water resources** – no anticipated impact to waters of the U.S., including wetlands. No anticipated effect to the 100-year floodplain, no effect on SPF valley storage, and no effect on water quality. • **Air quality** – no effect to air quality. • **Cultural resources** – no effect on prevailing historical buildings, bridges, or districts. Coordination with THC on proposed conversion; potential archeological artifacts may be uncovered during construction within floodway. • **Parks/recreation areas** – no effect to prevailing parks/ open space in the area (temporary construction easement if necessary). • **Biological resources** – no anticipated effect to high quality woodland habitats or maintained grass areas. • **Visual impacts –** little change to visual aesthetics.
I	Hampton/Inwood Road Bridge – from Canada Drive to Harry Hines Boulevard TxDOT/City of Dallas	EA includes road widening, reconstruction of the Hampton bridge, improvements at Inwood Road.	Project is within the Trinity River Corridor and within the Trinity River floodplain.	• **Land use** – results in the conversion of approximately 1 acre of transportation land to right-of-way, no substantial change in the availability of developable land, and no displacements. A short-term increase in noise (associated with construction) would be anticipated with no long-term increases anticipated. • **Environmental Justice** – project not located within the RSA used for evaluating cumulative impacts to minority and/or low income populations from residential displacements and the loss of affordable housing. • **Water resources** – anticipated temporary impacts to approximately 2 acres of emergent wetlands. No permanent fill and no mitigation necessary. No anticipated effect to the 100-year floodplain, no effect on SPF valley storage, and no effect on water quality. • **Air quality** – no substantial effect to air quality is expected. The project would be required to be consistent with a TIP and MTP that conform to the SIP. • **Cultural resources** – no effect on prevailing historical buildings, bridges, or districts; potential archeological artifacts may be uncovered during construction within floodway. • **Parks/recreation areas** – no effect to prevailing parks/ open space in the area. • **Biological resources** – no anticipated effect to high quality woodland habitats or maintained grass areas. • **Visual impacts –** little change to visual aesthetics.

TABLE 4-57A. REASONABLY FORESEEABLE ACTIONS - TRANSPORTATION PROJECTS

Map ID[1]	Project Name & Agency	Description	Location[2]	Anticipated Resource Effects[2]
J	Sylvan/Wycliff Bridge TxDOT/Dallas County	Bridge replacement project. Replaces the existing at-grade crossing of the Dallas Floodway with an elevated structure.	Project is within the Trinity River Corridor and within the Trinity River floodplain.	• **Land use** – results in the conversion of approximately 7 acres of land to transportation right-of-way, no substantial change in the availability of developable land, and no expected displacements. A short-term increase in noise (associated with construction) would be anticipated with no long-term increases anticipated. • **Environmental Justice** – no residential displacements are expected to occur. • **Water resources** – would result in no anticipated effects to waters of the U.S., including wetlands, no anticipated effect to the 100-year floodplain, no effect on SPF valley storage, and no effect on water quality. • **Air quality** – no substantial effect to air quality is expected. The project would be required to be consistent with a TIP and MTP that conform to the SIP. • **Cultural resources** – no effect on prevailing historical buildings, bridges, or districts; potential archeological artifacts may be uncovered during construction within floodway. • **Parks/recreation areas** – no likely effect to prevailing parks/open space in the area. • **Biological resources** – no anticipated effect to high quality woodland habitats or maintained grass areas. • **Visual impacts –** some impact to visual aesthetics likely due to elevated structure replacing current one.
K	Beckley Avenue City of Dallas	Roadway widening to a six-lane divided thoroughfare from Singleton Boulevard to IH-30.	Project is within the Trinity River Corridor but not within the Trinity River floodplain.	• **Land use** – results in the conversion of approximately 5 acres of land to transportation right-of-way, no substantial change in the availability of developable land, and no displacements anticipated. A short-term increase in noise (associated with construction) would be anticipated with minimal long-term increases anticipated. • **Environmental Justice** – no residential displacements are expected to occur. • **Water resources** – no anticipated effects to waters of the U.S., including wetlands, no anticipated effect to the 100-year floodplain, no effect on SPF valley storage, and no effect on water quality. • **Air quality** – no substantial effect to air quality is expected. The project would be required to be consistent with a TIP and MTP that conform to the SIP. • **Cultural resources** – no effect on prevailing historical buildings, bridges, or districts; no archeological impacts are likely due to highly urbanized development within surrounding area. • **Parks/recreation areas** – no likely effect to prevailing parks/ open space in the area. • **Biological resources** – no anticipated effect to high quality woodland habitats or maintained grass areas. • **Visual impacts –** little change to visual aesthetics.

TABLE 4-57A. REASONABLY FORESEEABLE ACTIONS - TRANSPORTATION PROJECTS

Map ID[1]	Project Name & Agency	Description	Location[2]	Anticipated Resource Effects[2]
L	Oak Lawn Avenue/DNT NTTA/TxDOT/ City of Dallas/ Dallas County	Includes roadway widening and geometric improvements to Oak Lawn between Maple and IH-35E. Also includes new access ramp connections from Oak Lawn to DNT. Improvements to DNT include bridge replacement over Oak Lawn and adding an auxiliary lane to improve traffic flow from southbound DNT to IH-35E.	Approximately 0.5 miles of project within the Trinity River Corridor. Project is not within the Trinity River floodplain.	• **Land use** – results in the conversion of approximately 0.5 acres of Old Parkland Hospital land to transportation right-of-way, no substantial change in the availability of developable land, and no displacements. A short-term increase in noise (associated with construction) would be anticipated with no long-term increases anticipated. • **Environmental Justice** – project not located within the RSA used for evaluating cumulative impacts to minority and/or low income populations from residential displacements and the loss of affordable housing. • **Water resources** – no effect to waters of the U.S., including wetlands, no effect to the 100-year floodplain, no effect on SPF valley storage, and no effect on water quality. • **Air quality** – no substantial effect to air quality is expected. The project would be required to be consistent with a TIP and MTP that conform to the SIP. • **Cultural resources** – no effect on prevailing historical buildings, bridges, or districts. Minor amount of land required from Old Parkland Hospital land. Possible effect to 2 historic Post Oak trees with mitigation on-site. SHPO concurs with no adverse effect; no archeological impacts are likely due to highly urbanized development within surrounding area. • **Parks/recreation areas** – no effect to prevailing parks/ open space in the area. • **Biological resources** – no anticipated effect to high quality woodland habitats or maintained grass areas. Potential effect to approximately 30 trees with additional plantings provided on-site as mitigation. • **Visual impacts –** little change to visual aesthetics.
M	Trinity Railway Express (TRE) Bridge (Owner) BNSF and UP Trackage Rights	Involves repair of existing rail bridge and construction of a new parallel rail bridge to serve the TRE from Dallas to Fort Worth.	Project is within the Trinity River Corridor and partially within the Trinity River floodplain.	• **Land use** – results in likely no conversion of land to transportation right-of-way (improvements within existing corridor), no substantial change in the availability of developable land, and no displacements. A short-term increase in noise (associated with construction) would be anticipated with no long-term increases anticipated. • **Environmental Justice** – project not located within the RSA used for evaluating cumulative impacts to minority and/or low income populations from residential displacements and the loss of affordable housing. • **Water resources** – no anticipated effects to waters of the U.S., including wetlands, no anticipated effect to the 100-year floodplain, no effect on SPF valley storage, and no effect on water quality. • **Air quality** – no expected effect to air quality. • **Cultural resources** – no effect on prevailing historical buildings, bridges, or districts; no archeological impacts are likely due to highly urbanized development within surrounding area. • **Parks/recreation areas** – no anticipated effect to prevailing parks/open space in the area. • **Biological resources** – no anticipated effect to high quality woodland habitats or maintained grass areas. • **Visual impacts –** little change to visual aesthetics.

TABLE 4-57A. REASONABLY FORESEEABLE ACTIONS - TRANSPORTATION PROJECTS

Map ID[1]	Project Name & Agency	Description	Location[2]	Anticipated Resource Effects[2]
N	DART Southeast Corridor DART Northwest Corridor DART	DART Southeast Corridor, extends from eastside of Dallas CBD to Buckner Boulevard in southeast Dallas Dart Northwest Corridor, extends from north side of CBD to Carrollton and Farmers Branch	Southeast – entirely within the Trinity River Corridor but not within the Trinity River floodplain. Northwest – approximately 10 miles in the Trinity River Corridor; also partially within the Trinity River floodplain.	• **Land use** – results in an estimated 10 acres of land converted to transportation right-of-way (largely within existing right-of-way). Acquisition of as many as 120 acres of private property for construction activities and infrastructure support. No substantial change in the availability of developable land. Could result in as many as 340 displacements. A short-term increase in noise (associated with construction) would be anticipated with long-term increases anticipated with operations. Noise walls and other noise-reducing measures to be implemented as appropriate. • **Environmental Justice** – project not located within the RSA used for evaluating cumulative impacts to minority and/or low income populations from residential displacements and the loss of affordable housing. • **Water resources** – minimal anticipated effects to waters of the U.S., including wetlands (0.01 acre). No anticipated effect to the 100-year floodplain, no effect on SPF valley storage, and no effect on water quality. • **Air quality** – no substantial effect to air quality; project would increase alternative transportation in the area. • **Cultural resources** – no anticipated effect on prevailing historical buildings, bridges, or districts. Several historic districts in the area (e.g., Fair Park National Historic Landmark District and Carrolton Crossing Depot), however, no impacts anticipated; no archeological impacts are likely due to highly urbanized development within surrounding area. • **Parks/recreation areas** – minimal effect to prevailing parks/open space in the area. Parkland property at Fair Park would need to be used for installation of portions of the line and portions of the proposed station. Minimal additional lands required. • **Biological resources** – would likely result in the loss of approximately 35 acres of woodland and 80 acres of maintained grass areas (most within the existing right-of-way). Mitigation developed as appropriate. • **Visual impacts –** would likely occur due to change in land use throughout both corridors.
O	Industrial Boulevard/ Irving Boulevard City of Dallas	Roadway widening from six to eight lane divided thoroughfare from MLK Jr. Boulevard to Commonwealth Boulevard	Project is within the Trinity River Corridor but not within the Trinity River floodplain.	• **Land use** – results in the conversion of approximately 16 acres of land to transportation right-of-way, no substantial change in the availability of developable land, and no more than 10 non-residential displacements. A short-term increase in noise (associated with construction) would be anticipated with minimal long-term increases anticipated. • **Environmental Justice –** no residential displacements are expected to occur. • **Water resources** – no anticipated effects to waters of the U.S., including wetlands, no anticipated effect to the 100-year floodplain, no effect on SPF valley storage, and no effect on water quality. • **Air quality** – no substantial effect to air quality is expected. The project would be required to be consistent with a TIP and MTP that conform to the SIP. • **Cultural resources** – potential effect to 2 historic structures, however, consultation/coordination with SHPO would result in no effect on prevailing historical buildings, bridges, or districts; no archeological impacts are likely due to highly urbanized development within surrounding area. • **Parks/recreation areas** – no effect to prevailing parks/ open space in the area. • **Biological resources** – no anticipated effect to high quality woodland habitats or maintained grass areas. • **Visual impacts –** little change to visual aesthetics.

TABLE 4-57A. REASONABLY FORESEEABLE ACTIONS - TRANSPORTATION PROJECTS

Map ID[1]	Project Name & Agency	Description	Location[2]	Anticipated Resource Effects[2]
P	West Fork Reliever Road City of Dallas/City of Irving/TxDOT	Project to improve east/west mobility along SH-183	Approximately 4 miles of the project are within the Trinity River Corridor. Project is also partially within the Trinity River floodplain.	• **Land use** – results in the conversion of approximately 140 acres of land to transportation right-of-way, no substantial change in the availability of developable land, and no more than 10 displacements. A short-term increase in noise (associated with construction) would be anticipated with minimal long-term increases anticipated. • **Environmental Justice –** project not located within the RSA used for evaluating cumulative impacts to minority and/or low income populations from residential displacements and the loss of affordable housing. • **Water resources** – anticipated effect to no more than 5 acres of waters of the U.S., including wetlands. No anticipated effect to the 100-year floodplain, no effect on SPF valley storage, and no effect on water quality. • **Air quality** – no substantial effect to air quality is expected. The project would be required to be consistent with a TIP and MTP that conform to the SIP. • **Cultural resources** – no effect on prevailing historical buildings, bridges, or districts; potential archeological artifacts may be uncovered during construction along river. • **Parks/recreation areas** – no effect to prevailing parks/ open space in the area. • **Biological resources** –anticipated effect to no more than 5 acres of high quality woodland habitats and minimal effect on maintained grass areas. • **Visual impacts –** little change to visual aesthetics.
Q	Loop 12/IH-35E Corridor TxDOT	Project to improve transportation, reduce congestion in the corridor	Approximately 2 miles of this project are within the Trinity River Corridor but not within the Trinity River floodplain.	• **Land use** – results in the conversion of approximately 13 acres of land to transportation right-of-way, no substantial change in the availability of developable land, and approximately 20 displacements. A short-term increase in noise (associated with construction) would be anticipated with minimal long-term increases anticipated. • **Environmental Justice** – project not located within the RSA used for evaluating cumulative impacts to minority and/or low income populations from residential displacements and the loss of affordable housing. • **Water resources** – anticipated effects to approximately 3 acres of waters of the U.S., including wetlands. Mitigation to be determined later. No effect to the 100-year floodplain, no effect on SPF valley storage, and no effect on water quality. • **Air quality** – no substantial effect to air quality is expected. The project would be required to be consistent with a TIP and MTP that conform to the SIP. • **Cultural resources** – no effect on prevailing historical buildings, bridges, or districts; potential archeological artifacts may be uncovered during construction along rivers. • **Parks/recreation areas** – would likely affect approximately 1 acre of Elm Fork Trinity River Park (restricted access). • **Biological resources** – would likely affect approximately 2 acres of upland forest with minimal impact to bottomland forest and riparian woodland. Mitigation would be developed as appropriate and would likely include approximately 2.5 acres (for effects associated with the entire project) in Dallas County. • **Visual impacts –** little change to visual aesthetics.

TABLE 4-57A. REASONABLY FORESEEABLE ACTIONS - TRANSPORTATION PROJECTS

Map ID[1]	Project Name & Agency	Description	Location[2]	Anticipated Resource Effects[2]
R	IH-35E south of US-67 to IH-30 TxDOT	Project for construction of approximately 6.0 miles of reversible, permanent barrier separated HOV lane	Project is entirely within the Trinity River Corridor and partially within the Trinity River floodplain.	• **Land use** – results in the conversion of approximately 0.5 acres of land to transportation right-of-way, no substantial change in the availability of developable land, and no displacements. A short-term increase in noise (associated with construction) would be anticipated with no long-term increases anticipated. • **Environmental Justice** – no residential displacements are expected to occur. • **Water resources** – no anticipated effects to waters of the U.S., including wetlands. No effect to the 100-year floodplain, no effect on SPF valley storage, and no effect on water quality. • **Air quality** – no substantial effect to air quality is expected. The project would be required to be consistent with a TIP and MTP that conform to the SIP. • **Cultural resources** – no effect on prevailing historical buildings, bridges, or districts. Project utilizes the historic Houston Street viaduct (listed on the NRHP) under mitigation agreement; potential archeological artifacts may be uncovered during construction within floodway. • **Parks/recreation areas** – no effect to prevailing parks/ open space in the area. • **Biological resources** – no anticipated effect to high quality woodland habitats or maintained grass areas. • **Visual impacts –** little change to visual aesthetics.
S	IH-30 from IH-35E to IH-45 (the Canyon) TxDOT	Project to alleviate congestion, make use of unused capacity on collector facilities, provide alternative routes for incident management, and reduce accidents.	Project is entirely within the Trinity River Corridor but not within the Trinity River floodplain.	• **Land use** – results in no conversion of land to transportation right-of-way, no substantial change in the availability of developable land, and no displacements. A short-term increase in noise (associated with construction) would be anticipated with no long-term increases anticipated. • **Environmental Justice** – project not located within the RSA used for evaluating cumulative impacts to minority and/or low income populations from residential displacements and the loss of affordable housing. • **Water resources** – no anticipated effects to waters of the U.S., including wetlands. No effect to the 100-year floodplain, no effect on SPF valley storage, and no effect on water quality. • **Air quality** – no substantial effect to air quality is expected. The project would be required to be consistent with a TIP and MTP that conform to the SIP. • **Cultural resources** – no effect on prevailing historical buildings, bridges, or districts; no archeological impacts are likely due to highly urbanized development within surrounding area. • **Parks/recreation areas** – no effect to prevailing parks/ open space in the area. • **Biological resources** – no anticipated effect to high quality woodland habitats or maintained grass areas. • **Visual impacts –** little change to visual aesthetics.

TABLE 4-57A. REASONABLY FORESEEABLE ACTIONS - TRANSPORTATION PROJECTS

Map ID[1]	Project Name & Agency	Description	Location[2]	Anticipated Resource Effects[2]
T	Jefferson Street Bridge City of Dallas/TxDOT	Project to realign/move the bridge 100 to 300 feet downstream. Would include demolition of existing bridge and build new bridge.	Project is within the Trinity River Corridor and within the Trinity River floodplain.	• **Land use** – no conversion of land to transportation right-of-way anticipated, no substantial change in the availability of developable land, and no displacements (minimal structural footprint). A short-term increase in noise (associated with construction) would be expected with no long-term increases anticipated. • **Environmental Justice** – project not located within the RSA used for evaluating cumulative impacts to minority and/or low income populations from residential displacements and the loss of affordable housing. • **Water resources** – no anticipated effects to waters of the U.S., including wetlands (minimal structural footprint). No effect to the 100-year floodplain, no effect on SPF valley storage, and no effect on water quality. • **Air quality** – no anticipated effect to air quality. • **Cultural resources** – no effect on prevailing historical buildings, bridges, or districts; potential archeological artifacts may be uncovered during construction within floodway. • **Parks/recreation areas** – no effect to prevailing parks/ open space in the area (minimal structural footprint). • **Biological resources** – no anticipated effect to high quality woodland habitats or maintained grass areas. • **Visual impacts –** some changes to visual aesthetics are likely due to relocation of bridge structure.
U	S.M. Wright Downgrade City of Dallas/TxDOT	Conversion/downgrade (fewer vehicle lanes) of existing road to parkway.	Project is within the Trinity River Corridor but not within the Trinity River floodplain.	• **Land use** – results in no conversion of land to transportation right-of-way, no substantial change in the availability of developable land, and no displacements. A short-term increase in noise (associated with construction) would be anticipated with no long-term increases. • **Environmental Justice** – no residential displacements are expected to occur. • **Water resources** – no anticipated effects to waters of the U.S., including wetlands. No effect to the 100-year floodplain, no effect on SPF valley storage, and no effect on water quality. • **Air quality** – impact on air quality would be insignificant. • **Cultural resources** – no effect on prevailing historical buildings, bridges, or districts; no archeological impacts are likely due to highly urbanized development within surrounding area. • **Parks/recreation areas** – no effect to prevailing parks/ open space in the area. • **Biological resources** – no anticipated effect to high quality woodland habitats or maintained grass areas. Minimal benefit through urban plantings. • **Visual impacts –** change to visual aesthetics are likely due to adding more beneficial landscaping along parkway corridor.

TABLE 4-57A. REASONABLY FORESEEABLE ACTIONS - TRANSPORTATION PROJECTS

Map ID[1]	Project Name & Agency	Description	Location[2]	Anticipated Resource Effects[2]
V	Santa Fe Trestle Hike and Bike Trail City of Dallas/TxDOT	Construction of an approx. 1.2 mile hike and bike trail extending from Moore Park to Industrial Blvd., crossing the Trinity River via the AT&SF Trestle Bridge, and spanning the Dallas Floodway.	Project is within the Trinity River Corridor and within the Trinity River floodplain..	• **Land use –** Results in acquisition of an estimated 6.2 acres of easements located on right-of-way for Oncor electric transmission lines. No other additional right-of-war required. • **Environmental Justice** – no residential displacements are expected to occur. • **Water resources-** anticipated effects to approximately 0.88 acre forested wetland and 1.52 acres emergent wetland. Minor impacts to floodplain; hydrolic modeling showed slightly decreased water surface elevations downstream of the AT&SF bridge structure and minor rises (0.01 foot) at a few locations within the floodway during a 100-year storm event. No effect on water quality. • **Air quality-** no anticipated effect to air quality. • **Cultural resources-** no effect on prevailing historical buildings, bridges (no potential to affect the AT&SF Trestle Bridge), or districts; potential archeological artifacts may be uncovered during construction within floodway. • **Parks/recreation areas-** would result in beneficial effects to parks/open space by preservation/ enhancement of existing open space (providing new hike and bike facilities and improved access to the area). • **Biological resources-** anticipated effect to 1.07 acres of trees and 4.23 acres of grassland. • **Visual impacts-** little change to visual aesthetics.

NOTES

1. See **Figure 4-4** for approximate project locations.
2. Location and acreages are approximate/estimates and are based on review of reasonably available information, data, maps, and reports. Anticipated effects do not take into consideration potential mitigation or other likely measures stipulated by regulatory authorities.

TABLE 4-58A. REASONABLY FORESEEABLE ACTIONS – DEVELOPMENT PROJECTS

Map ID[1]	Project Name & Agency	Description	Location[2]	Anticipated Resource Effects[2]
1	Balanced Vision Plan (Trinity River Corridor Urban Design Study) City of Dallas	An adopted plan that formulates activities within the Dallas Floodway to develop appropriate balance of multi-modal transportation, flood control, recreation and open space, environmental restoration and management, and economic and community development for the Trinity River corridor in Dallas. Adopted by City, April 2004. Plan is being revised/updated. Numbers shown are based on conceptual design.	Plan is within the Trinity River Corridor and within the Trinity River floodplain. The project has a total footprint of 2,000 acres.	• **Land use** – would result in the conversion of approximately 54 acres of land to right-of-way. Under the plan, approximately 50 acres of undeveloped land immediately outside the levees would be developed with no displacements. Future construction would likely result in short-term increases in noise, however, long-term effects would likely be beneficial due to the creation of additional open space, vegetative buffers, etc. Plan would likely result in additional benefits by promoting sustainable development and redevelopment in the immediate area. • **Environmental Justice** – no residential displacements are expected to occur. • **Water resources** – would result in overall beneficial effects to waters of the U.S., including wetlands through the creation of additional resources. There are currently approximately 505 acres of waters of the U.S., including wetlands within the project boundaries. This plan calls for the creation of an additional 405 acres of waters of the U.S., including wetlands and associated aquatic and bird habitats (requiring an Individual Section 404 permit). The plan also calls for the reconfiguration or realignment of segments of the existing river into more of a natural, meandering state as part of habitat restoration. This could result in potential short-term negative effects to benthic organisms within the old sections that would eventually be filled. However, long-term benefits (in the form of increased biodiversity) would be anticipated with the creation of the more "natural" meanders, ripples, and pools. In time, benthic organisms would re-establish in these newly created areas. The plan would result in no detrimental effect on the 100-year floodplain and would result in beneficial effects to SPF valley storage and water quality as a result of the environmental enhancements discussed above. • **Air quality** – consistent with regional air quality goals; promotes compatible, sustainable development and alternative transportation (e.g., hike and bike, and DART) in the area. • **Cultural resources** – would likely result in beneficial effects on prevailing historical buildings, bridges, and districts through preservation; potential archeological artifacts may be uncovered during creation of lakes, reconfiguration/realignment of river, and other developments constructed within the floodway. • **Parks/recreation areas** – would result in beneficial effects to parks/open space by preservation/ enhancement of existing open space, providing new amenities, and by providing improved access to the area. • **Biological resources** – would result in beneficial effects to high quality woodland habitats and maintained grass areas through environmental preservation and enhancements. Plan would include approximately 260 acres of new tree/woodland plantings. With the creation of new waters of the U.S., including wetlands, approximately 665 of grassland would be lost, however, the remaining 1,480 acres would benefit through planned grassland enhancements. • **Visual impacts** – beneficial impacts to visual aesthetics through creation of new recreational space, woods, lakes, and other associated amenities.

TABLE 4-58A. REASONABLY FORESEEABLE ACTIONS – DEVELOPMENT PROJECTS

Map ID[1]	Project Name & Agency	Description	Location[2]	Anticipated Resource Effects[2]
2	Elm Fork Athletic Complex City of Dallas	Plan provides for conversion and environmental restoration of landfill into state-of-the-art soccer complex with 23 playing fields, 1,200 parking spaces, and shaded pavilions with facilities and 4 miles of paths/trails.	Plan is within the Trinity River Corridor and within the Trinity River floodplain. The project has a total footprint of 160 acres.	• **Land use** – results in no conversion of land to transportation right-of-way, no change in the availability of developable land in the area, and no displacements. Provides for redevelopment opportunity associated with conversion of commercial landfill into recreational open space, with 11 acres of urban development for new parking spaces and recreational amenities. • **Environmental Justice** – project not located within the RSA used for evaluating cumulative impacts to minority and/or low income populations from residential displacements and the loss of affordable housing. • **Water resources** – implementation would likely result in benefits to waters of the U.S., including wetlands, through creation of approximately 3 acres of open water (irrigation pond). The plan would have no detrimental effect on the 100-year floodplain. • **Air quality** – would likely result in no effect to air quality. • **Cultural resources** – would likely result in no effect to prevailing historical buildings, bridges, or districts in the area; no archeological impacts are likely due to already disturbed land from former landfill. • **Parks/recreation areas** – results in benefits by providing for preservation of existing natural areas, addition of recreation amenities, and trails and trail linkages. • **Biological resources** – would likely result in minimal benefits through 5 acres of additional tree/woodland plantings. However, approximately 20 acres of grassland will be lost. • **Visual impacts** – beneficial impacts to visual aesthetics through creation of new recreational/athletic space, water features, and other forms of landscaping.

TABLE 4-58A. REASONABLY FORESEEABLE ACTIONS – DEVELOPMENT PROJECTS

Map ID[1]	Project Name & Agency	Description	Location[2]	Anticipated Resource Effects[2]
3	Fivemile Creek Master Plan City of Dallas	Floodplain reclamation and recreation plan for Fivemile Creek and the Trinity River between Loop 12 and IH-20 to Bonnie View to the west in the City of Dallas.	Plan is within the Trinity River Corridor and within the Trinity River floodplain. The project has a total footprint of 410 acres.	• **Land use** – Implementation would result in reclamation of approximately 410 acres of the floodplain, resulting in 257 acres available for urban development and 110 acres for open space. Implementation of the land use designations in the plan would likely result in future displacements, however, it is unknown how many. Future construction activities would also likely result in an increase in short-term noise, however, no long-term effects would be expected. Overall, benefits would likely be realized through a coordinated approach to land use planning in the area. • **Environmental Justice** – project not located within the RSA used for evaluating cumulative impacts to minority and/or low income populations from residential displacements and the loss of affordable housing. • **Water resources** – implementation would result in benefits through stream channel restoration and the creation of approximately 43 acres of emergent wetlands. Project would have no detrimental effect on the 100-year floodplain, and beneficial effects on SPF valley storage and water quality as a result of environmental restoration, and identification of NPDES permitted facilities and non-compliant facilities. • **Air quality** – would likely result in no effect to air quality. • **Cultural resources** – would likely result in benefits to prevailing historical buildings, bridges, and districts through preservation; potential archeological artifacts may be uncovered during creation of wetlands, creek bank restoration, and other project associated construction activities. • **Parks/recreation areas** – results in benefits by providing for stream channel restoration, trail linkages, and by providing approximately 110 acres of new open space. • **Biological resources** – would likely result in benefits through additional tree/woodland plantings, habitat restoration, buffers, etc. • **Visual impacts** – beneficial impacts to visual aesthetics through creation of new wetlands, open space, nature trails, and landscaping.
4	Mill Creek Pressure Sewer System City of Dallas	Plan calls for flood control measures by constructing an extensive underground pressure sewer system for Mill Creek, located in the Mill Creek sub-watershed in the City of Dallas.	Only a small portion within the Trinity River Corridor but not within the Trinity River floodplain. The project has a footprint within the corridor boundary of approximately 3 acres.	• **Land use** – results in no conversion of land to transportation right-of-way, no change in the availability of developable land in the area, and no displacements. Construction activities would likely result in an increase in short-term noise, however, no long-term effects would be expected. Overall, benefits from a pressure sewer system would likely be realized through improved flood control and flood water conveyance. • **Environmental Justice** – no residential displacements are expected to occur. • **Water resources** – implementation would likely result in minimal benefits to waters of the U.S., including wetlands. The plan would result in no detrimental effect on the 100-year floodplain, and beneficial effects on water quality as a result of drainage improvements. • **Air quality** – would likely result in no effect to air quality. • **Cultural resources** – would likely result in benefits to prevailing historical buildings, bridges, and districts through preservation; only potential archeological artifacts may be uncovered during construction of outfall at Trinity River. • **Parks/recreation areas** – would likely result in beneficial effects to parks/open space through channel restoration. • **Biological resources** – would likely result in minimal benefits to existing resources. • **Visual impacts** – little change to visual aesthetics.

TABLE 4-58A. REASONABLY FORESEEABLE ACTIONS – DEVELOPMENT PROJECTS

Map ID[1]	Project Name & Agency	Description	Location[2]	Anticipated Resource Effects[2]
5	Trinity River Audubon Center City of Dallas	Project involves environmental restoration and conversion of former landfill into emergent wetlands, ponds, native tall grass prairie, and nature center within the Great Trinity Forest.	Project is within the Trinity River Corridor and within the Trinity River floodplain. The project has a total footprint of 120 acres.	• **Land use** – results in no conversion of land to transportation right-of-way, no change in the availability of developable land in the area, and no displacements. Construction activities would likely result in an increase in short-term noise, however, no long-term effects would be expected. Overall, benefits would likely be realized through the restoration and conversion of a former landfill into new natural habitats as well as the creation of a 6 acre nature center and facilities. • **Environmental Justice** – project not located within the RSA used for evaluating cumulative impacts to minority and/or low income populations from residential displacements and the loss of affordable housing. • **Water resources** – implementation would likely result in benefits to waters of the U.S., including wetlands, through the creation of approximately 20 acres of emergent wetlands and ponds. The plan would result in no detrimental effect on the 100-year floodplain, and beneficial effects on SPF valley storage and water quality as a result of restoration activities and drainage improvements. • **Air quality** – would likely result in no effect to air quality. • **Cultural resources** – would likely result in no effect to prevailing historical buildings, bridges, or districts in the area; archeological impacts are unlikely due to already disturbed land from former landfill. • **Parks/recreation areas** – would likely result in beneficial effects to parks/open space through channel restoration. • **Biological resources** – would likely result in benefits through creation of 94 acres of native tall grass prairies and preservation of existing resources. • **Visual impacts –** beneficial changes to visual aesthetics through creation of new wetlands, ponds, trails, and other forms of landscaping.
6	Texas Horse Park at the Trinity City of Dallas	Project involves the development of an equestrian center within the Great Trinity Forest.	Project is within the Trinity River Corridor and within the Trinity River floodplain. The project has a total footprint of 500 acres.	• **Land use** – results in no conversion of land to transportation right-of-way and likely no change in the availability of developable land in the area (acquisition of land in the floodplain or existing open space). Approximately 190 acres of new facilities and parking space will be developed. Plan would result in no displacements. Implementation could result in minimal short-term increases in noise associated with facilities/amenities construction, but no long-term noise effects would be anticipated. Overall benefits would be realized through coordinated conversion of pasture lands and recreation development in the area. • **Environmental Justice** – project not located within the RSA used for evaluating cumulative impacts to minority and/or low income populations from residential displacements and the loss of affordable housing. • **Water resources** – implementation would result in no benefits to Waters of the U.S., including wetlands. The plan would result in no detrimental effect on the 100-year floodplain. • **Air quality** – would likely result in no effect to air quality. • **Cultural resources** – would likely result in benefits to prevailing historical buildings, bridges, and districts through preservation, education, etc; potential archeological artifacts may be uncovered during construction of facilities. • **Parks/recreation areas** – would result in no beneficial effects to parks/open space areas. • **Biological resources** – would result in net loss of approximately 96 acres of woodlands and approximately 94 acres of grasslands. • **Visual impacts –** beneficial changes to visual aesthetics through creation of new equestrian facilities, trails, open space, and other forms of landscaping.

TABLE 4-58A. REASONABLY FORESEEABLE ACTIONS – DEVELOPMENT PROJECTS

Map ID[1]	Project Name & Agency	Description	Location[2]	Anticipated Resource Effects[2]
7	Dallas Floodway Extension Project (DFE) USACE	Flood control project authorized to provide flood damage reduction, ecosystem restoration, recreation, and environmental mitigation. Features include new levees, constructed wetlands, river channel realignment, and recreation opportunities/amenities.	Project is within the Trinity River Corridor and within the Trinity River floodplain. The project has a total footprint of 1,179 acres.	• **Land use** – results in no conversion of land to transportation right-of-way, however, a substantial acreage of land (including the area between the levees, areas associated with flood damage reduction swales, environmental mitigation areas, and other areas necessary to maintain the project's beneficial features) will be permanently changed in terms of use. Project could result in primarily commercial displacements; however, the project would reclaim approximately 417 acres of industrial land uses from the floodplain and approximately 200 acres of residential land uses from the floodplain. As many as 10,000 structures in the downtown Dallas area would have a reduced flood risk and as many as 2,500 structures would have increased flood protection along the southern Trinity River Corridor. The project would likely result in a short-term increase in noise associated with construction, but no long-term increase would be anticipated. Overall benefits would likely be realized through increased flood protection in the area. • **Environmental Justice** – no residential displacements are expected to occur in areas of minority or low income populations. • **Water resources** – implementation would result in benefits to Waters of the U.S., including wetlands through creation of approximately 271 acres of "chain of wetlands." The plan would result in no detrimental effect on the 100-year floodplain, and a beneficial effect on SPF valley storage and water quality through environmental restoration and creation of wetlands. • **Air quality** – would likely result in no effect to air quality. • **Cultural resources** – would likely result in no effect to prevailing historical buildings, bridges, or districts in the area; potential for archeological impacts are likely due to construction of levees, wetlands, and river realignment within floodway. • **Parks/recreation areas** – would result in beneficial effects to parks/open space through ecosystem restoration efforts and increased recreational amenities/opportunities. • **Biological resources** – would result in the loss of approximately 164 acres of bottomland hardwoods from levee construction, sump construction, diversion of the river channel, and from excavation of flood damage reduction swales. Project would also result in the loss of approximately 107 acres of grassland. However, approximately 1,200 acres of environmental mitigation would occur, of which 30 acres would be managed as grassland and the remainder as bottomland hardwood forest. Would result in the creation of upper chain of wetlands – providing approximately 54 acres of emergent wetland, 33 acres of native riparian grasses, and 18 acres of open water. Would result in the creation of lower chain of wetlands – providing approximately 70 acres of emergent wetlands, 69 acres of riparian grassland, and 27 acres of open water. • **Visual impacts** – beneficial impacts to visual aesthetics through creation of new wetlands, lakes, recreational space, and other associated amenities.

TABLE 4-58A. REASONABLY FORESEEABLE ACTIONS – DEVELOPMENT PROJECTS

Map ID[1]	Project Name & Agency	Description	Location[2]	Anticipated Resource Effects[2]
8	Old Trinity River Channel Ecosystem Restoration USACE	Ecosystem restoration project with minor flood control improvements along remnants of the West Fork channel and a hike/bike trail component.	Project is within the Trinity River Corridor but not within the Trinity River floodplain. The project has a total footprint of approximately 106 acres.	• **Land use** – results in no conversion of land to transportation right-of-way, no change in the availability of developable land in the area, and results in no displacements. Planned improvements could result in short-term increases in noise; however, no long-term effects would be anticipated. Overall, benefits would be realized through improved floodwater conveyance and flood protection. • **Environmental Justice** – project not located within the RSA used for evaluating cumulative impacts to minority and/or low income populations from residential displacements and the loss of affordable housing. • **Water resources** – implementation would result in benefits through the restoration and/or creation of approximately 24 acres of emergent wetlands along the old channel. The plan would result in no detrimental effect on the 100-year floodplain, and a beneficial effect on SPF valley storage and water quality through the restoration/creation of wetlands. • **Air quality** – would likely result in no effect to air quality. • **Cultural resources** – would result in no effect to prevailing historical buildings, bridges, or districts in the area; potential archeological artifacts may be uncovered with creation of wetlands and flood control development within channel. • **Parks/recreation areas** – would likely result in minimal benefits through restoration activities. • **Biological resources** – would result in benefits by improving the quality of existing habitat on approximately 28 acres and by reforesting approximately 53 acres of open space to bottomland hardwoods. Total net loss of grasslands, however, would be approximately 77 acres. • **Visual impacts** – beneficial impacts to visual aesthetics through creation of new wetlands, channel restoration, and reforesting of woodlands.
9	Joppa Preserve Habitat Restoration Plan USACE	Habitat enhancement and recreational amenities project for Lemmon Lake and Little Lemmon Lake area.	Project is within the Trinity River Corridor and within the Trinity River floodplain. The project has a total footprint of 390 acres.	• **Land use** – results in no conversion of land to transportation right-of-way, no change in the availability of developable land in the area, and results in no displacements. Planned improvements could result in short-term increases in noise; however, no long-term effects would be anticipated. • **Environmental Justice** – project not located within the RSA used for evaluating cumulative impacts to minority and/or low income populations from residential displacements and the loss of affordable housing. • **Water resources** – implementation would result in the restoration/creation of approximately 123 acres of emergent wetlands. The plan would result in no detrimental effect on the 100-year floodplain, and a beneficial effect on SPF valley storage and water quality through the creation of additional wetlands. • **Air quality** – would likely result in no effect to air quality. • **Cultural resources** – would result in no effect to prevailing historical buildings, bridges, or districts in the area; potential archeological artifacts may be uncovered with creation and restoration of wetlands and lakes. • **Parks/recreation areas** – would result in benefits through enhancement activities and the creation of additional recreation opportunities/amenities. • **Biological resources** – would result in benefit of providing approximately 53 acres of reforested area, but with a net loss of approximately 176 acres of grassland. • **Visual impacts** – beneficial impacts to visual aesthetics through creation of new wetlands, recreational amenities, and reforesting of woodlands.

TABLE 4-58A. REASONABLY FORESEEABLE ACTIONS – DEVELOPMENT PROJECTS

Map ID[1]	Project Name & Agency	Description	Location[2]	Anticipated Resource Effects[2]
10	Joppa Rodeo and Community Park Communities Foundation of Texas and Dallas County Buffalo Soldiers	Development of rodeo arena, horse stables and historic town.	Project is within the Trinity River Corridor but not within the Trinity River floodplain. The project has a total footprint of 22 acres.	• **Land use** – results in the conversion of approximately a half an acre of right-of-way. The plan converts approximately 22 acres of an undeveloped site to recreational uses, of which 6.4 acres would be used for facilities and parking space. Implementation would results in no displacements. Planned improvements would likely result in short-term increases in noise; however, no long-term effects would be anticipated. Overall, benefits would be realized by improved recreational opportunities. • **Environmental Justice** – project not located within the RSA used for evaluating cumulative impacts to minority and/or low income populations from residential displacements and the loss of affordable housing. • **Water resources** – implementation would benefit waters of the U.S., including wetlands by creation of approximately a one acre pond. The plan would result in no detrimental effect on the 100-year floodplain, and no effect on SPF valley storage and water quality. • **Air quality** – would likely result in no effect to air quality. • **Cultural resources** – would result in no effect to prevailing historical buildings, bridges, or districts in the area; potential archeological artifacts may be uncovered due to undeveloped land. • **Parks/recreation areas** – would result in benefits through the conversion of vacant land to recreational uses. • **Biological resources** – would result in loss of less than one acre of woodland and approximately 7 acres of grassland. • **Visual impacts** – beneficial impacts to visual aesthetics through creation of equestrian facilities, trails, water features, and other forms of landscaping.
11	Burnett Field City of Oak Cliff	Proposed mixed-use development site for office, retail/ commercial, or multi-residential facility located adjacent to the Dallas Floodway at IH-35E.	Project is within the Trinity River Corridor but not within the Trinity River floodplain. The project has a total footprint of approximately 14 acres.	• **Land use** – results in no conversion of land to transportation right-of-way and no additional change in the availability of developable land in the area (approximately 14 acres already included as effects under the Trinity River Corridor Land Use and Economic Development Plan). Implementation of the land use designations and redevelopment activities would not result in displacements. Planned redevelopment would likely result in short-term increases in noise; however, no long-term effects would be anticipated. Overall, benefits would be realized through planned redevelopment. • **Environmental Justice** – no residential displacements are expected to occur. • **Water resources** – implementation would result in no effects to waters of the U.S., including wetlands. The plan would result in no detrimental effect on the 100-year floodplain, and a likely beneficial effect on SPF valley storage and water quality through improved drainage associated with redevelopment activities. • **Air quality** – would likely result in no effect to air quality. • **Cultural resources** – would result in no effect to prevailing historical buildings, bridges, or districts in the area; archeological impacts are unlikely due to previous development. • **Parks/recreation areas** – minor benefits could be realized through the creation of small pockets of open space/parks. • **Biological resources** – would likely result in minimal benefits through creation of small pockets of urban plantings. However, approximately 14 acres of maintained grass areas would likely be lost to future development/ redevelopment activities. • **Visual impacts** – impacts to visual aesthetics are likely through conversion of maintained grass near major highway to office/commercial or residential development.

TABLE 4-58A. REASONABLY FORESEEABLE ACTIONS – DEVELOPMENT PROJECTS

Map ID[1]	Project Name & Agency	Description	Location[2]	Anticipated Resource Effects[2]
12	Mobil Place Planned Development Exxon/Mobil Corporation	Planned development for commercial office space and parking garage facilities. Located adjacent to Commonwealth Drive and IH-35E in Dallas.	Project is within the Trinity River Corridor but not within the Trinity River floodplain. The project has a total footprint of approximately 44 acres.	• **Land use** – results in no conversion of land to transportation right-of-way, no additional change in the availability of developable land in the area (approximately 44 acres already included as effects under the Trinity River Corridor Land Use and Economic Development Plan), and no displacements. Planned development would likely result in short-term increases in noise; however, no long-term effects would be anticipated. • **Environmental Justice** – project not located within the RSA used for evaluating cumulative impacts to minority and/or low income populations from residential displacements and the loss of affordable housing. • **Water resources** – implementation would result in no effects to waters of the U.S., including wetlands. The plan would result in no detrimental effect on the 100-year floodplain and no effect on SPF valley storage or water quality. • **Air quality** – would likely result in no effect to air quality. • **Cultural resources** – would result in no effect to prevailing historical buildings, bridges, or districts in the area; archeological impacts are unlikely due to highly urban development within surrounding area. • **Parks/recreation areas** – would result in no effects to parks and open space. • **Biological resources** – would likely result in minimal benefits through creation of small pockets of urban plantings. However, approximately 2 acres of maintained grass areas would likely be lost to future development/ redevelopment activities. • **Visual impacts** – little change to visual aesthetics.
13	Oncor West Levee - Norwood Project Oncor Electric Delivery Company	Proposed 345 kV electrical transmission line (aerial and underground). Located between the West Levee SW switching station near the west levee south of Singleton Boulevard and the Norwood switching station located between Loop 12 and the Trinity River in Irving.	Project is within the Trinity River Corridor and partially within the Trinity River floodplain. The project has a total footprint of approximately 85 acres.	• **Land use** – results in no conversion of land to transportation right-of-way, no additional change in the availability of developable land in the area (easements only within the Dallas Floodway), and no displacements. Planned activities would likely result in short-term increases in noise; however, no long-term effects would be anticipated. • **Environmental Justice** – no residential displacements are expected to occur. • **Water resources** – implementation would likely result in no effects to waters of the U.S., including wetlands. The plan would result in no detrimental effect on the 100-year floodplain and no effect on SPF valley storage or water quality. A minimal number of support poles/structures would be placed within the Dallas Floodway, but no effects would be anticipated. • **Air quality** – would likely result in no effect to air quality. • **Cultural resources** – would result in no effect to prevailing historical buildings, bridges, or districts in the area; archeological artifacts may be uncovered due to construction within floodway and along river areas. • **Parks/recreation areas** – would result in no substantial effects to parks and open space. Would result in a new utility easement and minimal pole/support structure placement within the Dallas Floodway. • **Biological resources** – would likely result in no substantial effects to existing woodland habitat or maintained grass areas. • **Visual impacts** – effect on visual aesthetics likely to occur due to elevated transmission lines and other related electrical structures.

TABLE 4-58A. REASONABLY FORESEEABLE ACTIONS – DEVELOPMENT PROJECTS

Map ID[1]	Project Name & Agency	Description	Location[2]	Anticipated Resource Effects[2]
14	Dallas Police Academy City of Dallas	Development of a new police academy and associated facilities in the Cadillac Heights neighborhood.	Project is within the Trinity River Corridor but not within the Trinity River floodplain. The project has a total footprint of approximately 23 acres.	• **Land use** – results in no conversion of land to transportation right-of-way and no additional change in the availability of developable land in the area (approximately 23 acres already included as effects under the Trinity River Corridor Land Use and Economic Development Plan). Acquisition of as many as 207 urban lots for academy and related facilities, however, it is unknown how many displacements may occur. Future construction activities would also likely result in an increase in short-term noise. A slight increase in long-term noise could also be expected with on-going operations. • **Environmental Justice** – project not located within the RSA used for evaluating cumulative impacts to minority and/or low income populations from residential displacements and the loss of affordable housing. • **Water resources** – implementation would result in no effects to waters of the U.S., including wetlands. The plan would result in no detrimental effect on the 100-year floodplain and no effect on SPF valley storage or water quality. • **Air quality** – would likely result in no effect to air quality. • **Cultural resources** – would result in no effect to prevailing historical buildings, bridges, or districts in the area; archeological impacts unlikely due to urban development within and surrounding project area. • **Parks/recreation areas** – would result in no effects to parks and open space. • **Biological resources** – would likely result in minimal benefits through creation of small pockets of urban plantings. Small pockets of trees and maintained grass areas would likely be lost to future development activities. • **Visual impacts** – little change to visual aesthetics.
15	Pavaho/Zoo Mitigation Area City of Dallas	Stormwater management program and improvements/ construction of wetlands.	Project is within the Trinity River Corridor and within the Trinity River floodplain. The project has a total footprint of approximately 66 acres.	• **Land use** – results in no conversion of land to transportation right-of-way, no substantial change in the availability of developable land in the area, and no displacements. Planned activities would likely result in short-term increases in noise associated with construction; however, no substantial long-term effects would be anticipated. • **Environmental Justice** – project not located within the RSA used for evaluating cumulative impacts to minority and/or low income populations from residential displacements and the loss of affordable housing. • **Water resources** – implementation would result in the creation of approximately 60 acres of emergent wetlands along the Trinity River (near the Pavaho Pump Station) and approximately 6 acres of emergent wetlands along Cedar Creek (near the Dallas Zoo). The project would result in no detrimental effect on the 100-year floodplain, and would result in benefits to SPF valley storage and water quality through increased water conveyance and wetland construction. • **Air quality** – would likely result in no effect to air quality. • **Cultural resources** – would result in no effect to prevailing historical buildings, bridges, or districts in the area; potential archeological artifacts may be uncovered due to construction of wetlands. • **Parks/recreation areas** – would result in no minimal benefits to open space through the creation of wetlands. • **Biological resources** – would result in benefits through creation of wetlands. However, would result in the loss of approximately 66 acres of grassland. • **Visual impacts –** beneficial impacts to visual aesthetics through creation of wetlands.

TABLE 4-58A. REASONABLY FORESEEABLE ACTIONS – DEVELOPMENT PROJECTS

Map ID[1]	Project Name & Agency	Description	Location[2]	Anticipated Resource Effects[2]
16	Moore Park Gateway Master Plan City of Dallas	Identified in the *Trinity River Corridor MIP* as a proposed neighborhood gateway leading to the Trinity River. Includes park expansion with trails, active recreation facilities, and a canoe launch at the Trinity River near the DART Bridge. Master Plan completed August 2001.	Plan is within the Trinity River Corridor and within the Trinity River floodplain. The project has a total footprint of approximately 4 acres.	• **Land use** – results in no conversion of land to transportation right-of-way, no change in the availability of developable land in the area, and no displacements. Approximately one acre will be converted to new recreational facilities and amenities. Future improvements could result in an increase in short-term noise; however, no long-term effects would be expected. Overall, benefits would likely be realized through coordinated park planning. • **Environmental Justice** – no residential displacements are expected to occur. • **Water resources** – implementation would not affect waters of the U.S., including wetlands. Minimal enhancements to the existing wetlands could be realized. The plan would result in no detrimental effect on the 100-year floodplain, and no effect on SPF valley storage or water quality. • **Air quality** – would likely result in no effect to air quality. • **Cultural resources** – would likely result in benefits to prevailing historical buildings, bridges, and districts through preservation; potential archeological artifacts may be uncovered due to construction on undeveloped land. • **Parks/recreation areas** – would result in beneficial effects to parks/open space through additional facilities/amenities and enhancement of existing environment. The plan calls for an approximate 4 acre expansion of the park. • **Biological resources** – would likely result in minimal benefits through creation of small pockets of plantings and enhancement of existing resources. However, the plan would result in the net loss of less than one acre of trees and approximately one acre of maintained grass. • **Visual impacts** – beneficial impacts to visual aesthetics through creation of new recreational space, trails, and related amenities.

TABLE 4-58A. REASONABLY FORESEEABLE ACTIONS – DEVELOPMENT PROJECTS

Map ID[1]	Project Name & Agency	Description	Location[2]	Anticipated Resource Effects[2]
17	Woodall Rodgers Park City of Dallas	Plan includes the development of an open space deckover park that will cover Woodall Rodgers Freeway from St. Paul to Pearl Street, connecting the Uptown, Downtown, and Arts Districts of the City of Dallas.	Project is within the Trinity River Corridor (CBD) but not within the Trinity River floodplain. The project has a total footprint of approximately 5 acres.	• **Land use** – results in no conversion of land to transportation right-of-way, no substantial change in the availability of developable land in the area, and no displacements. Total loss of urban space would be approximately 5 acres. Planned activities would likely result in short-term increases in noise associated with construction; however, no substantial long-term effects would be anticipated. Minor benefits could be realized through increased open space, vegetative plantings, and reduced vehicle traffic in certain areas. Overall, benefits would be realized through increased open space and additional passive recreation opportunities. • **Environmental Justice** – project not located within the RSA used for evaluating cumulative impacts to minority and/or low income populations from residential displacements and the loss of affordable housing. • **Water resources** – implementation would result in no effects to waters of the U.S., including wetlands. The plan would result in no detrimental effect on the 100-year floodplain, and a likely beneficial effect on SPF valley storage and water quality through development of additional open space. • **Air quality** – would likely result in no effect to air quality. • **Cultural resources** – would result in no effect to prevailing historical buildings, bridges, or districts in the area; no archeological impacts are likely due to highly urbanized development within surrounding area. • **Parks/recreation areas** – benefits would be realized through the development of a small open space park in the CBD. The Woodall Rodgers Park would create approximately 5 acres of additional open space in the area. • **Biological resources** – would likely result in minimal benefits through creation of small pockets of urban plantings. • **Visual impacts** – beneficial impacts to visual aesthetics through creation of new recreational/open space and new landscaping.
18	JPI – Cedars Site JPI	Plan includes the development of a mixed use retail and residential community consisting of mid and high-rise apartments, condominiums, townhomes, and a hotel.	Project is within the Trinity River Corridor but not within the Trinity River floodplain. The project has a total footprint of approximately 129 acres.	• **Land use** – results in no conversion of land to transportation right-of-way, however, it is unknown if any non-residential displacements will occur. The proposed plan would redevelop existing urban plots and add approximately 23 acres of new urban acreage. Future construction activities would also likely result in an increase in short-term noise. A slight increase in long-term noise could also be expected with on-going operations. • **Environmental Justice** – no residential displacements are expected to occur. • **Water resources** – implementation would benefit waters of U.S., including wetlands through the creation of approximately 28 acres of new water features. The project would result in no detrimental effect on the 100-year floodplain, and no effect on SPF valley storage or water quality. • **Air quality** – would likely result in no effect to air quality. • **Cultural resources** – would result in no effect to prevailing historical buildings, bridges, or districts in the area; no archeological impacts are likely due to highly urbanized development within surrounding area. • **Parks/recreation areas** – would result in no effects to parks and open space. • **Biological resources** – would result in loss of approximately two acres of woodland and approximately 49 acres of grassland. • **Visual impacts –** change to visual aesthetics likely with development of new high-rise buildings and associated landscaping.

TABLE 4-58A. REASONABLY FORESEEABLE ACTIONS – DEVELOPMENT PROJECTS

Map ID[1]	Project Name & Agency	Description	Location[2]	Anticipated Resource Effects[2]
19	JPI – UPR Site JPI	Plan includes the development of a mixed use urban development.	Project is within the Trinity River Corridor but not within the Trinity River floodplain. The project has a total footprint of approximately 31 acres.	• **Land use** – results in no conversion of land to transportation right-of-way, however, it is unknown if any non-residential displacements will occur. The proposed plan would redevelop existing urban plots and add approximately 4 acres of new urban acreage. Future construction activities would also likely result in an increase in short-term noise. A slight increase in long-term noise could also be expected with on-going operations. • **Environmental Justice** – project not located within the RSA used for evaluating cumulative impacts to minority and/or low income populations from residential displacements and the loss of affordable housing. • **Water resources** – implementation would not affect waters of the U.S., including wetlands. • **Air quality** – would likely result in no effect to air quality. • **Cultural resources** – would result in no effect to prevailing historical buildings, bridges, or districts in the area; no archeological impacts are likely due to highly urbanized development within surrounding area. • **Parks/recreation areas** – would result in no effects to parks and open space. • **Biological resources** – would result in loss of approximately 4 acres of grassland. • **Visual impacts –** change to visual aesthetics likely with development of new high-rise buildings and associated landscaping.
20	Chavez Planned Development CHPD-LP	Plan includes the development of a mixed use urban development.	Project is within the Trinity River Corridor but not within the Trinity River floodplain. The project has a total footprint of approximately 9 acres.	• **Land use** – results in no conversion of land to transportation right-of-way, however, it is unknown if any non-residential displacements will occur. The proposed plan would redevelop 9 acres of existing urban plots into mixed use development. Future construction activities would also likely result in an increase in short-term noise. A slight increase in long-term noise could also be expected with on-going operations. • **Environmental Justice** – project not located within the RSA used for evaluating cumulative impacts to minority and/or low income populations from residential displacements and the loss of affordable housing. • **Water resources** – implementation would not affect waters of the U.S., including wetlands. • **Air quality** – would likely result in no effect to air quality. • **Cultural resources** – would result in no effect to prevailing historical buildings, bridges, or districts in the area; no archeological impacts are likely due to highly urbanized development within surrounding area. • **Parks/recreation areas** – would result in no effects to parks and open space. • **Biological resources** – would result in no effects to grasslands or woodlands. • **Visual impacts –** change to visual aesthetics likely with development of new high-rise buildings and associated landscaping.

NOTES

1. See **Figure 4-5** for approximate project locations.
2. Locations and acreages are approximate/estimates and are based on review of reasonably available information, data, maps, and reports. Anticipated effects do not take into consideration potential mitigation or other likely measures stipulated by regulatory authorities.

APPENDIX L-5

INDIRECT LAND USE ANALYSIS

THIS PAGE INTENTIONALLY LEFT BLANK

INDIRECT LAND USE IMPACTS ASSESSMENT

FOR

TRINITY PARKWAY

FROM: IH-35E/SH-183
TO: US-175/SH-310

DALLAS COUNTY, TEXAS

FHWA-TX-EIS-02-02-DS
TxDOT CSJ: 0918-45-121

Prepared for:

U.S. DEPARTMENT OF TRANSPORTATION
FEDERAL HIGHWAY ADMINISTRATION
TEXAS DEPARTMENT OF TRANSPORTATION
NORTH TEXAS TOLLWAY AUTHORITY

JUNE 2008

THIS PAGE INTENTIONALLY LEFT BLANK

TABLE OF CONTENTS

1.0 INTRODUCTION 1
1.1 Purpose 1
1.2 Project Limits 1
1.3 Methodology 1

2.0 FRAMEWORK FOR EVALUATION 1
2.1 Definition of Indirect Land Use Impacts 1
2.2 Measuring Indirect Land Use Impacts 2

3.0 EVALUATION OF EXISTING AND FORECASTED CONDITIONS 3
3.1 Description of the Proposed Project and Funding 3
3.2 Basic Demand Drivers: Population and Employment Forecasts 5
3.3 Relevant City Plans, Policy Documents, Initiatives and Programs within the Indirect Impacts Study Area 6
3.4 Land Use Capacity and Development Potential 18
3.5 Future Development Patterns in the Study Areal 20
3.6 Travel Performance Estimates 21

4.0 ASSESSMENT OF INDIRECT LAND USE IMPACTS 26
4.1 Potential for Land Use Change Assessment 26
4.2 Potential Land Use Changes and Compatibility with Land Use Plans 30
4.3 Policies to Mitigate Potential Land Use Impacts 31

LIST OF TABLES

Table L5-1 2000-2030 Population And Employment Growth 6
Table L5-2 Proposed Capital Improvement Transportation Projects Within The Immediate Study Corridor 17
Table L5-3 Future Land Use Capacity 18
Table L5-4 Available Areas For Redevelopment Within The Indirect Impacts Study Boundary 19
Table L5-5 Redevelopable Areas By Land Use Type Along Alternative Alignments Within The Indirect Impacts Study Boundary 20
Table L5-6 2030 Average Loaded Speed (Mph) 22
Table L5-7 Level Of Service For Indirect Impacts Study Area (2030) 24
Table L5-8 Assessment Of Indirect Land Use Impacts 27

LIST OF ATTACHMENTS

Attachment 1 Trinity River Corridor Future Land Use Plan
Attachment 2 Forward Dallas Vision Illustration

THIS PAGE INTENTIONALLY LEFT BLANK

1.0 INTRODUCTION

1.1 Purpose

The purpose of this report is to identify and analyze the potential for indirect land use impacts (or effects) related to the proposed Trinity Parkway as part of the Supplemental Draft Environmental Impact Statement (SDEIS). Indirect land use impacts differ from the direct impacts associated with the construction and operation of the proposed project, and are caused by other actions that have an established relationship or connection to the proposed project. These induced actions are those that would not or could not occur except for the implementation of the proposed project. The analysis of indirect land use impacts is intended to describe how land use would be different under the Build and No Build alternatives.

1.2 Project Limits

The proposed project involves the construction of an approximately 9-mile limited-access toll facility within the central portion of Dallas County, Texas. The project limits of the proposed Trinity Parkway extend from the IH-35E/SH-183 interchange (north terminus) to the US-175/SH-310 interchange (south terminus). The proposed project is within the boundaries of the City of Dallas.

1.3 Methodology

This evaluation for indirect land use impacts follows the National Cooperative Highway Research Program (NCHRP) Report 25-25, Task 22, *Forecasting Indirect Land Use Impacts on Transportation Projects* (TRB, 2007). Of the six land use forecasting tools provided in the NCHRP Report 25-25 (Task 22), the "Planning Judgment" forecasting tool was utilized as the framework for the analysis. The steps provided for this specific methodology come from *A Guidebook for Evaluating the Indirect Land Use and Growth Impacts of Highway Improvements* prepared by ECONorthwest and Portland State University for the Oregon Department of Transportation (2001).

2.0 FRAMEWORK FOR EVALUATION

2.1 Definition of Indirect Land Use Impacts

According to the Council on Environmental Quality (CEQ) definition, indirect impacts are "caused by the action and occur later in time or farther removed in distance, but are still reasonably foreseeable" (40

C.F.R. § 1508.8). Indirect impacts may include growth-inducing impacts and other impacts related to induced changes in the pattern of land use, population density or growth rate, and related impacts on air and water and other natural systems, including ecosystems."

For the purposes of this analysis, the indirect impacts assessment is limited to land use and the effects of the construction of the proposed Trinity Parkway. Though the Trinity Parkway is an important element in the long range vision for the Trinity River Corridor which includes plans for park and recreational amenities, flood protection, environmental restoration and management, and community and economic development, the potential indirect land use impacts assessed for the Trinity parkway are purposely isolated from the other corridor components to determine the Trinity Parkway's influence on land use.

2.2 Measuring Indirect Land Use Impacts

Potential impacts to land use include residential, commercial, and industrial development; floodplain encroachment; local/regional economic growth; public improvements such as expansion of utilities and general increased demand for community facilities**.**

The key variables suggested by the NCHRP Report 25-25 (Task 22) that might contribute to measurable changes in local development patterns in response to a transportation improvement include:

- **Change in accessibility** - Typically the most important variable. Measured in travel time or delay, if available; or ratio of volume/capacity or change in access. *Assumption: The larger travel time savings or greater the change in level of service, the stronger the potential for induced land use change.*

- **Change in property value** - Likelihood of changes in land price may influence development. *Assumption: The greater change in property values, the stronger the potential for induced land use change*.

- **Forecasted growth** - Measured as population, employment, and land development for region, city, or sub-area. Forecasted population and employment trend may indicate the demand for land development where access and other public services may be available. *Assumption: If proposed transportation project improves access and the average annual population/employment rate is relatively high, then the stronger the potential for induced land use change.*

- **Relationship between supply and demand** - Measured as population, employment, and land development. Determine how much vacant, buildable land exists in the study area compared to

the rest of a larger city/sub-area/region. *Assumption: the more limited the supply is relative to demand, the more likely improved access would increase the probability of development (induced land use change).*

- **Availability of non-transportation services and other market factors** - Assess whether there are things that exist (i.e., favorable market conditions, utilities) that would promote or limit development or be possible barriers to service. *Assumption: that access alone is not sufficient to trigger development; favorable market conditions as well as other key public utilities like sewer and water often should be available to the study area at a reasonable cost. If they are, improvements in access are more likely to facilitate land use change.*

- **Public policy** - Assess whether local land use plans are closely followed and enforced such that development pressures can be resisted. *Assumption: if there were no policy or weak enforcement then the potential for land use change would be strong*.

The assessment of these key variables for indirect impacts should take into consideration two questions: (1) How likely is it that a transportation project will be followed by some noticeable change in the land use that would not have occurred in the absence of the project or sooner than anticipated? (2) If such changes did occur, would they be consistent with the comprehensive plans?

3.0 EVALUATION OF EXISTING AND FORECASTED CONDITIONS

The Planning Judgment methodology begins with a detailed review of the project prospectus. As this project overview was addressed in Chapters 1 and 2 of the SDEIS and defined initially during the Project Scoping phase of the Environmental Impact Statement (EIS), further discussion in this document is not warranted (see Trinity Parkway SDEIS, **Appendix A-2**).

3.1 Description of the Proposed Project and Funding

Transportation improvements are needed throughout the Canyon/Mixmaster and Lower Stemmons area to address current and projected transportation demand and existing facility deficiencies. The purpose of the proposed Trinity Parkway project is to improve mobility, manage congestion, improve safety, and increase accessibility to business and public facilities. The project is needed to accommodate future travel demand in the Dallas-Fort Worth region up to year 2030 (the planning horizon for this proposed project). The proposed project would aid in the relief of congestion throughout the city center, thus allowing for a more effective and comprehensive plan of action in the improvement of roadway conditions and traffic capacity for the network of freeways feeding into the Canyon/Mixmaster area.

As previously discussed, the proposed Trinity Parkway would be a limited access toll facility extending from the IH-35E/SH-183 interchange to the US-175/SH-310 interchange. The Trinity Parkway is proposed as a reliever route around the Canyon Mixmaster and the Lower Stemmons area. The proposed project length would be approximately 9 miles and would initially consist of four to six mixed-flow lanes (ultimate configuration would be six main lanes throughout), freeway-to-freeway interchanges, and local street interchanges that vary based on the different proposed route alternatives. A thorough discussion of the nine proposed project alternatives, including the No-Build Alternative, is presented in **Chapter 2 Alternatives Considered** of this SDEIS.

The proposed project design concept and scope and project cost are not yet consistent with the conforming Metropolitan Transportation Plan (*Mobility 2030: The Metropolitan Transportation Plan (MTP) for the Dallas-Fort Worth Area*) and the 2008-2011 Transportation Improvement Program (TIP), as revised, as proposed by the NCTCOG. Measures are being taken to address the issue. Prior to FHWA taking final action on this proposed project, it will be consistent with a conforming MTP and TIP/STIP. The project was developed from NCTCOG's operational CMP which meets all requirements of amended 23 U.S.C. 134(k)(3) and 49 U.S.C. 5303(k)(3), amendments incorporating the transportation planning requirements of SAFETEA-LU. Funding for the proposed project is anticipated to be provided by local, state, and federal sources, and through the collection of tolls. Implementing the operational concept of toll collection provides a needed funding mechanism for roadway construction and maintenance, as well as accelerating the project construction schedule.

Study Area Boundary

According to the NCHRP Report 466: *Desk Reference for Estimating the Indirect Impacts of Proposed Transportation Projects* (page 27), the Trinity Parkway, as an access-controlled roadway, is unlikely to affect land redevelopment except near access points, such as near interchanges. Accordingly, the Indirect Impacts Study Area, as described in **Section 4.24.1.1** and pictured in **Figure 4-3** of this SDEIS, consists of half-mile radius circles surrounding the interchange locations generated by Trinity Parkway Alternatives 2A, 2B, 3A, 3B, 3C, 4A, 4B, and 5 within the City of Dallas. A half-mile radius was chosen over a 1 mile radius as to not overlap with the development impacts of nearby major freeways, such as IH 35E, and interchanges on their surrounding properties. It is the aggregation of these half-mile radius circles that defines the Indirect Impacts Study Boundary, an area consistent with the size and shape of the overall Trinity Corridor study area. Defining the study area in this manner is one of several acceptable methods identified in the NCHRP Report 466.

Time Frame for Indirect Impacts Analysis

The temporal boundaries for the indirect land use impacts analysis are the years 2005 to 2030. The years 2005 and 2030 were chosen to correlate with the FHWA approval of the Trinity Parkway Draft Environmental Impact Statement (DEIS) in 2005 and long range planning documents such as The *Trinity River Corridor Comprehensive Land Use Plan Final Report* (adopted in March 2005), the City of Dallas Comprehensive Plan - *Forward Dallas!* (approved in June, 2005), and the North Central Texas Council of Governments (NCTCOG) *Mobility 2030: The Metropolitan Transportation Plan*.

3.2 Basic Demand Drivers: Population and Employment Forecasts

The NCTCOG Demographic Forecast (2003b) provides long-range, small area population, household, and employment projections for use in intra-regional infrastructure planning and resource allocations in the metropolitan area of North Central Texas. The forecast, which is conducted for the nine counties surrounding the Dallas-Fort Worth urban core (Collin, Dallas, Denton, Rockwall, Tarrant, Ellis, Johnson, Kaufman, and Parker Counties), predicts growth of almost 4 million persons between 2000 and 2030. By 2030, the area is expected to reach 9.0 million persons and approximately 5.4 million jobs. The forecast was developed using a federally recognized land-use model that allocated households and employment to the nine counties for a regional control total, then disaggregated the totals to forecast districts, cities, and counties. Local municipalities worked with NCTCOG staff to ensure that local government land use and comprehensive plans were included in the forecast. A task force of local officials from city, county, and transportation entities acted as a governing body for the process and endorsed the forecast for approval by the NCTCOG's Executive Board.

Any direct impacts associated with the proposed project would be concentrated within the City of Dallas, in the immediate vicinity of the proposed Trinity Parkway. As such, alterations in growth patterns/rates occurring within the City of Dallas can be inferred to represent similar changes occurring within the indirect impacts study area.

Table L5-1 summarizes the demographic forecast from 2000 to 2030 for the City of Dallas, as well as the 9-county NCTCOG metropolitan planning area (MPA). Population and employment is anticipated to increase by approximately 17 and 34 percent, respectively, from 2000 to 2030 within the City of Dallas. Compared to the Nine-County NCTCOG MPA, the city's population and employment forecasts reflect more conservative growth rates.

Table L5 -1. 2000-2030 POPULATION AND EMPLOYMENT GROWTH

Area	Population				Employment				2000-2030 Average Annual Population/ Employment Growth Rate[1]
	2000	2030	Growth	Change (%)	2000	2030	Growth	Change (%)	
9 County MPA	5,019,800	9,004,800	3,985,000	79.39	3,138,400	5,379,000	2,240,600	71.39	3.71%
City of Dallas	1,202,592	1,404,847	202,255	16.82	1,038,314	1,390,219	351,905	33.89	1.65%

[1] Calculated as the ratio of population/employment. Source: NCTCOG (www.NCTCOG.org)

3.3 Relevant City Plans, Policy Documents, Initiatives and Programs within the Indirect Impacts Study Area

A variety of plans and policies exist within the study area to encourage, guide, monitor, and evaluate various development activities ranging from regional transportation infrastructure to residential, commercial, or industrial activities. A brief description of the most influential aspects of regional and local plans sponsored by the NCTCOG, Dallas Area Rapid Transit (DART), and the City of Dallas are described below.

North Central Texas Council of Governments (NCTCOG)

Mobility 2030: The Metropolitan Transportation Plan for the Dallas-Fort Worth Area (2007a)
This plan defines transportation systems and services in the Dallas-Fort Worth (DFW) metropolitan area. It serves as a guide for the expenditure of State and Federal funds through the year 2030. The plan addresses regional transportation needs that are identified through forecasting current and future travel demand, developing and evaluating system alternatives, and selecting those options, which best meet the mobility needs of the region. The proposed Trinity Parkway is included in this Mobility 2030 plan, and has been part of earlier NCTCOG metropolitan transportation plans including Mobility 2020, Mobility 2025, and all of the interim updates to the Plan.

Regional Rail Corridor Study and the Regional Transit Initiative
In an effort to assess regional rail transportation needs, NCTCOG sponsored the Regional Rail Corridor Study (2005c) in cooperation with NCTCOG member cities. Concurrently, the Regional Transit Initiative was a parallel and ongoing effort which setout to address institutional, financing, and legislative options in the Dallas and Fort Worth area. Following these regional transit assessments, transportation officials reached consensus on establishing a new Regional Rail Authority in order to provide coordinated solutions to future mobility challenges in the region. The proposed structure would include the continued growth of the Dallas Area Rapid Transit (DART), Denton County Transportation Authority (DCTA), and the Fort Worth Transportation Authority (The T), along with a new Regional Rail Authority. This would

provide over 350 miles of rail service, reaching communities outside current transportation authority service boundaries. Currently, three of the Regional Rail corridor recommendations are located near the proposed project area; these are the Union Pacific Mainline Corridor, Trinity Railway Express (TRE) East Corridor, and the Waxahachie Corridor. All are consistent with the NCTCOG *Mobility 2030* Plan. The Union Pacific Mainline Corridor runs east and west between Dallas and Fort Worth, the TRE East line travels from the Dallas County line to downtown Dallas, and the Waxahachie rail corridor connects Dallas to Waxahachie in Ellis County.

Mobility 2030 has identified a need for inter-regional passenger rail connectivity by way of high-speed rail through the Trans Texas Corridor (TTC). A section of the proposed TTC high speed rail would allow access to the DFW airport from the south and also connect to the regional light and commuter rail systems to facilitate movement to other destinations in the region. Feasibility and environmental studies regarding the proposed state-wide and multimodal Trans Texas Corridor project are on-going and NCTCOG and DART continue to monitor the TTC and how its development will influence the regional transit system.

Bicycle and Pedestrian Facilities

The *Mobility 2030* plan proposes the construction of several new facilities in a bicycle network called the regional Veloweb. The purpose of the Veloweb routes is to provide regional routes, as well as connectivity to interregional routes, which would encourage the use of bicycles for utilitarian trip purposes. The veloweb is also designed to encourage concurrent pedestrian transportation use. Projects with high exposure levels, linkages to transit, and service provision to bicycle transportation districts justify priority investment in transportation funds and are recommended by NCTCOG. Several Veloweb links are planned within the Trinity Parkway corridor, which includes the Katy Trail, Santa Fe Trestle Trail, Trinity Strand Trail, and Great Trinity Trail.

Dallas Area Rapid Transit (DART)

Planning Documents

- The DART *Southeast Corridor Major Investment Study (MIS)* - This study was completed in May 2000. It was conducted to analyze travel patterns, identify transportation issues and deficiencies, and develop a plan to address these issues in the southeast quadrant of the DART service area (DART, 2000a).

- The DART *Northwest Corridor MIS* - The *Northwest Corridor MIS* was completed in February 2000. This study developed a plan for intermodal transportation investments to improve mobility

in the corridor extending from downtown Dallas through northwest Dallas, Irving, Farmers Branch, Carrollton, and Addison (DART, 2000b).

- *DART 2030 Transit System Plan* - The DART 2030 Transit System Plan, completed in October 2006, represents the long-range vision of future capital and operating programs for DART through the year 2030. Some of the plan elements include: adding approximately 43 miles of additional rail service; a comprehensive network of enhanced and rapid bus corridors; new and improved express bus service; an increase in the number of miles of managed HOV lanes in the service area; improvements to para transit and fixed-route service, and many other mobility and operational improvements to the transit system (DART, 2006b).

  DART's 2030 Transit System Plan identifies corridors that have promising ridership potential and are important to local and regional economic development initiatives. One such corridor, the West Dallas Corridor, was examined from downtown Dallas to north of Mountain Creek Lake. DART identifies this area as having tremendous opportunity given the planned extension of Woodall Rodgers Freeway and the Trinity River Corridor project. The corridor would be an approximately 6-mile light rail line from downtown Dallas to the Loop 12 area within proximity of the Trinity Parkway Corridor. As a recommended corridor, development within the West Dallas Corridor is slated for reassessment in future planning system updates.

  The DART 2030 Plan also contains a land use and economic development component showing DART's commitment to work with member cities to jointly plan transit and land uses to maximize economic development potential and transit system productivity. These joint planning efforts include joint land use/transit corridor planning and funding Corridor feasibility studies to support right-of-way preservation, station area planning, and transit oriented development (TOD) adjacent to DART's light rail system.

Rail Stations (with Parking)/Transit Centers

In total, there are 36 existing DART rail stations/transit centers within the City of Dallas, of which only one is located within the Trinity Parkway Indirect Impacts study boundary (8th and Corinth Station). Both the Red and Blue Lines are currently accessible via this station along with bus passenger drop-off/pick-up areas. There are numerous DART rail stations/transit centers within 1 mile of the study corridor; they include: Cedars Station at Belleview and Wall streets, Akard Station at Pacific Avenue, Central Business District East and West Transfer Centers, Convention Center Station at Memorial Drive and Lamar Street, Dallas Zoo Station at Ewing Avenue and Clarendon Drive, Malcolm X Boulevard Transfer Location at Southland Street, Medical/Market Center Station at Motor Street and Medical Center Drive, Morrell Station at Morrell and Woodbine Avenues, Pearl Station at Bryan Street, St. Paul Station at Bryan Street,

Union Station at Houston Street, Victory Station on Victory Avenue, and the West End Station on Pacific Avenue. DART is currently working on expanding its Green Line, which will connect communities from Pleasant Grove and downtown Dallas to Farmers Branch and Carrollton. Several Green Line rail stations will be within proximity of the Trinity Parkway Corridor, including the Market Center, Victory, West End, Akard, St. Paul, and Pearl stations.

Transit-Oriented Development

As previously stated, the 8th and Corinth Station is the only current DART Rail Station located within the indirect impacts study boundary. The site holds potential for promoting transit oriented development in an area that has traditionally suffered economically. *The Trinity River Corridor Comprehensive Land Use Plan* cites 8th and Corinth as a Prototype Site for possible future development. This development concept centers around the 8th and Corinth Station being the closest light rail station to the planned river amenities throughout the Trinity Corridor (parks, lakes, trails, etc.). The site would possibly be developed as a mixed-use transit oriented development with high-density residential over neighborhood serving retail and affordable single-family attached housing.

The City of Dallas

Planning Documents

The intensity, timing, and character of development may be directed by local or regional comprehensive plans, general plans, or long-range plans. The goals identified in planning documents may be implemented through a variety of tools, including zoning, capital improvements, and tax incentives. A thorough understanding of these plans and mechanisms is necessary for the analysis of a transportation project's potential effect on land use.

Current land use is regulated through the Dallas City Council according to the city's Comprehensive Land Use Plan, zoning maps, and zoning ordinances. **Plates 3-2** and **3-3** of the SDEIS show general land use and zoning within the study area. **Plate 3-4** of the SDEIS shows planned land use within the study area. The city has sponsored numerous studies for potential projects along the Dallas Floodway and the Trinity River corridor in southern Dallas. In 1992, the Dallas City Council initiated *The Dallas Plan* to help establish a long-range planning policy for the city. *The Dallas Plan* identified the Trinity River Corridor as a core asset for the City of Dallas. In 1994, the City Council adopted general goals and policies for the Trinity River corridor as one of six citywide strategic initiatives presented by *The Dallas Plan* (1994).

In late 1994, the Honorable Ron Kirk, former Mayor of Dallas, appointed two co-chairs to oversee a citizens' committee - the Trinity River Corridor Citizens Committee (TRCCC) - that would define specific goals and objectives for the Trinity River corridor. In May 1996, the city council adopted a TRCCC report

from the 400-member committee that contained specific goals and objectives relating to flood control, transportation, recreation, economic development, and environmental restoration along the Trinity River corridor. As a result, the City of Dallas has continued to promote the policy of multi-objective management (i.e., multiple uses that can occur within the floodplain) of the Dallas Floodway and the lower Trinity River corridor.

The *Great Trinity Forest Master Plan* (TPWD, 1997) identified several specific initiatives for environmental restoration and recreation along the Trinity River corridor. It proposed an overall plan to improve recreational access to this part of the Trinity River corridor and manage its environmental resources. The plan was completed for Texas Parks and Wildlife Department (TPWD) and adopted by Dallas City Council in March 1997.

In September 1997, the Dallas City Council adopted TxDOT's *Trinity Parkway Corridor Major Transportation Investment Study* (MTIS) (TxDOT, 1998a).

Subsequently, the aforementioned plans and studies led to a comprehensive Trinity River Corridor Bond Program that was approved by Dallas citizens in May 1998 (City of Dallas, 1998a). The major initiatives for the Bond Program are listed below:

- Build the Dallas Floodway Extension (DFE);
- Create the Trinity Downtown Lakes;
- Build the Woodall Rodgers Freeway Extension;
- Redesign the Canyon/Mixmaster/Lower Stemmons;
- Develop, design, and build Trinity Trails;
- Develop the Great Trinity Forest;
- Construct the Elm Fork Levee; and
- Develop the Trinity Parkway (proposed action).

As described in **Section 1.8** of the SDEIS, the nine proposed project alternatives are considered in terms of how well they provide compatibility with Local Development Plans. The following are additional studies/plans that represent the diversity of planning that has occurred during the last several years in the Trinity River corridor. All of the studies have tried to revitalize the area with renewed recreation, economic development, flood control, environmental restoration, and transportation improvements. These studies include:

- *CBD Gateways Urban Design Study* (City of Dallas, 1996) - evaluated the need for and locations of potential downtown connections to adjoining neighborhoods.

- *West Dallas Comprehensive Land Use Study* (City of Dallas, 1998b) - adopted by the Dallas City Council in 1998. This study provided an inventory of all West Dallas land uses, as well as zoning, and discussed strategic issues/options to influence the positive redevelopment and stability of the area.

- *10th Street Land Use Study* (City of Dallas, 1999b) - adopted by the Dallas City Council in September 1999. The northern portion of this district is located in the Trinity River corridor. The study provided strategies to revitalize and redevelop the neighborhoods in the study area.

- *Trinity River Corridor Master Implementation Plan, Lake Design and Recreational Amenities Report* (City of Dallas, 1999a) - completed in December 1999. This study was developed to coordinate the various parks, lake, and other recreational improvements within the Trinity River corridor.

- Moore Park Master Plan (City of Dallas, 2001b) - identified in the Trinity River Corridor MIP as a proposed neighborhood gateway leading into the Trinity River. The Dallas Park Board approved this plan in August 2001. Additional details concerning Moore Park are provided in SDEIS **Section 3.3.2**.

- *Stemmons/Design District Land Use Plan* (City of Dallas, 2001a) - adopted by the Dallas City Council in October 2001. This district is located in the north-central portion of the study area adjacent to the Dallas Floodway east levee. The study was conducted to analyze current zoning and development needs, assess the impact of recommendations from several major studies that impact the area (including the proposed action), and determine the potential for a Special Purpose District to address zoning issues that might otherwise impede future economic growth and development.

- The *South Dallas/Fair Park Economic Development Corridor Plan* (2001d) was initiated by the City of Dallas in order to assist in the revitalization of the South Dallas/Fair Park Community. The goals set forth were to address impacts of high intensity land uses along commercial corridors in adjacent residential neighborhoods through a Planned Development District (PDD) and to create economic development strategies to encourage desirable development along the business corridors. Highlighted are land uses having negative land use impacts on residential neighborhoods. Such land use categories account for just over 50 percent of uses and include hotel/motels, land utilized for the sale of used goods, automobile related uses, and alcohol related uses. In response, the South Dallas/Fair Park Community has a number of current and planned

initiatives under way throughout the community, ranging from Community Development Corporation (CDC) sponsored housing to the City of Dallas and Dallas Area Rapid Transit infrastructure improvements. The plan cites the proposed Trinity Parkway as creating an opportunity to develop a regional retail center at the western edge of the South Dallas/Fair Park community, surrounding the area of the proposed Trinity Parkway southern terminus. Also identified is the Lamar Street Regional Services Corridor, a project opportunity at the terminus of the southern Trinity Parkway in which long-term economic development is expected from the implementation of the proposed Trinity Parkway.

- *Trinity River Corridor Comprehensive Land Use Plan with Economic Impact Analysis and Implementation Strategy* (City of Dallas, 2002a, updated in 2005) - The City of Dallas initiated this plan to analyze the existing land uses within the Trinity River corridor and to develop land use plans related to proposed flood control and recreational improvements. The study also prepared benefit to cost comparisons of the Trinity Parkway Build Alternatives. The key objectives of the plan were to promote compatible land uses, define strategies to stimulate economic revitalization, and maximize the value of the Trinity River project. The methodology utilized in the plan includes quantitative assessments of alternative land use development options and associated public investments.

  The *Trinity River Corridor Comprehensive Land Use Plan Final Report* was adopted in March 2005. The Preferred Land Use Plan (see **Attachment 1**) serves as the long-range land use and development plan for the corridor. The Final Report divides the corridor into seven Planning Districts and 23 study areas in order to communicate appropriate land use planning and design policies for each part of the corridor. For each study area, a *Land Use Opportunity Plan* shows specific development opportunities in the study area, based on expected market response to the Trinity Project's major public improvements. Prototype Sites located within a district are also discussed and reflect examples of the types of site development that can occur consistent with the plan's policy direction.

  The proposed Trinity Parkway is cited as being a surrounding influence (having direct and indirect impacts) and/or acting as an implementation initiative to faster growth and development within four of the seven Planning Districts and four study areas within the corridor. In general, the Trinity Parkway is described as having the potential for opening up areas to a new generation of development opportunities.

- *A Renaissance Plan for Dallas Parks and Recreation in the 21st Century* (City of Dallas, 2002b) - This plan was published in August 2002 by the Dallas Park and Recreation Department (PARD).

The overall purpose of the plan was to develop an "innovative, interactive, creative, environmentally sensitive, and state-of-the-art" long range development plan for the PARD over the next 10 to 20 years (2012 to 2022). The plan includes a Capital Implementation Plan organized according to the six park maintenance districts across the city.

- *A Balanced Vision Plan for the Trinity River Corridor* (City of Dallas, 2003a) - This study amended the MIP and focused on the geographic area of Dallas known as the "Trinity River Corridor" that includes the Dallas Floodway and adjacent residential and commercial/industrial areas, extending approximately 1 mile on either side of the Dallas Floodway. The *BVP* study was initiated by City of Dallas Mayor Laura Miller, former Dallas County Judge Lee Jackson, and interested citizens to take a new look at the possibilities for the future of the Trinity River Corridor. The study identified several key components that may be subject to coordinated planning and design along with the proposed action (see SDEIS **Section 3.1.1.4 Coordinated Planning and Design**). The objectives of this study were to review and critique previous study efforts and to propose an urban design vision plan for the corridor. This *BVP* recommends an urban design vision that offers an appropriate balance among the five inter-related issues of:

  - Flood Protection (see SDEIS **Section 3.5.6**);
  - Environmental Restoration and Management (see SDEIS **Section 3.5.6**);
  - Parks and Recreation (see SDEIS **Section 3.3.2**);
  - Transportation (see SDEIS **Section 3.2**); and
  - Community and Economic Development.

  The community and economic development component of the BVP encourages new large-scale development at locations with enhanced access to recreation and transportation. The goal is for these public investments to lead to revitalization and redevelopment that support existing communities and create new business and mixed use areas.

- Lake Configuration and Water Quality Study for the Dallas Floodway - The City of Dallas initiated this study to analyze the water quality of the Trinity River and reevaluate alternative lake configurations within the Dallas Floodway. The study was performed to aid the Dallas City Council in evaluating lake design features in relation to other ongoing studies related to land use, transportation, and flood control plans. The work product included hydraulic modeling for the Dallas Floodway, water quality modeling for the river segment, water quality modeling of the off-channel lakes with respect to algae and dissolved oxygen. The final report was submitted to the City January 16, 2006 (City of Dallas, 2006a).

- *Comprehensive Plan: Forward Dallas! Let's Build our Future* (City of Dallas, 2006b) - The City of Dallas prepared and adopted (June 14, 2006) its citywide comprehensive plan to guide growth and development. The plan outlines a long-range vision for the city that focuses on land use, transportation and mobility, and economic development. Related to the Trinity Parkway corridor, the comprehensive plan incorporates many elements of the previously cited studies *Trinity River Corridor Comprehensive Land Use Plan* and *A Balanced Vision Plan for the Trinity River Corridor.* Land use designations along the proposed project corridor presented on the Land Use 2002 map in *ForwardDallas!* include predominantly industrial to the north of the study corridor; single-family, multifamily, and parks/open space to the south of the corridor; and industrial, single-family, and some vacant land to the southeast of the corridor. The study corridor itself is shown as primarily parks/open space with some industrial and single-family land use along the corridor edges. The Vision Illustration in *ForwardDallas!* (adopted June 2006) shows the proposed project corridor passing adjacent to industrial and mixed-use areas to the north and residential and urban neighborhood areas to the south. The study corridor itself is shown to be comprised primarily of open space (see **Attachment 2**).

Other Initiatives and Programs Sponsored by the City of Dallas

The City of Dallas is responsible for several initiatives to increase economic development and investment, and provide opportunities for affordable housing in the city. Some of these initiatives described below are being applied to communities within or immediately adjacent to the indirect impacts study area.

<u>Tax Increment Finance Districts</u>

Tax Increment Finance Districts (TIFs) reinvest added tax revenue from new development back into areas where it originated. By financing public improvements, TIFs help stimulate new private investment and increase real estate values. Each TIF District has its own objectives, programs, and success indicators which generally pertain to public infrastructure improvements (water, sewer, storm sewer, sidewalks, other utilities); environmental remediation; parks, open-space, trails and gateways; and single family and mixed-use developments. Below are several TIF Districts located adjacent to the Indirect Impacts study boundary.

- *Oak Cliff Gateway TIF District* - created in 1992 represents an opportunity to create a TIF district to improve the major entry into Oak Cliff from downtown Dallas, support economic development and neighborhood revitalization in this community, and to establish direct linkages with the Trinity River Corridor and to capitalize on these linkages for additional growth and increased tax base in the District (City of Dallas, 1992a).

- *The Cedars TIF District* - created in 1992 (City of Dallas, 1992b) as a TIF district to promote development by utilizing public investments to attract private investment. Located between downtown and the Trinity River, the Cedars district seeks to capitalize on the planned Trinity River development to secure growth and investment in the district.

- *Design District TIF District* - created in 2005 (City of Dallas, 2005) to provide a source of funding for public infrastructure improvements that would assist in redeveloping the industrial/warehouse district into a pedestrian friendly, mixed-use neighborhood. The district would create opportunities to take advantage of the expanding DART light rail system and promote transit oriented development, and also improve access to the Trinity River and Trinity Corridor developments.

- *Fort Worth Avenue TIF District* - is the newest TIF created in 2007 (City of Dallas, 2007g) to provide a source of funding for public infrastructure improvements necessary to enhance the real estate market within the area. The district represents the outgrowth of the City of Dallas' effort to provide a model for redeveloping urban corridors to take full advantage of the Trinity River project, future bridges, and undeveloped/underdeveloped land parcels near downtown Dallas.

Public Improvement Districts

A small section of the Indirect Impacts Study Area is contained within the Southside Public Improvement District (PID), approved by the Dallas City Council in 2005. The City of Dallas created a current total of six Public Improvement PIDs within areas desiring certain public-use improvements that are paid for by special tax assessments to property owners in the area in which improvements are made. PIDs may use the assessed funds for various infrastructure and cultural/recreational improvements beyond existing City services provided. The Southside PID is located in census tract 33 within the Cedars, Fair Park, and East Dallas Neighborhoods (City of Dallas, 2006f).

Neighborhood Investment Programs

The City of Dallas implemented a new Neighborhood Investment Program (NIP) in the fall of 2003 thereby concentrating 60% to 80% of the affordable housing funds and Community Development Block Grant Public Improvement funds within seven targeted areas within the City of Dallas. Overall, these targeted areas also areas were established by the City for capital infrastructure improvement, housing growth and economic/business growth. NIPs are supported by the City of Dallas Capital Bond program and appropriated money of the municipality. Within the Indirect Impacts Study area, there are four NIP target areas, two of which are located in the La Bajada and West Dallas Homeowners Association neighborhoods (census tracts 101.01 and 101.02); and two at the southern project terminus in the

Rochester Park and Ideal neighborhoods, adjacent to the Indirect Impacts study boundary (census tracts 39.02 and 115.00) (City of Dallas, 2008).

Land Banking and Transfer Programs

The City of Dallas Land Bank acquires unproductive, vacant, and developable lots for affordable single-family housing development; a process implemented by means of tax foreclosure. The City of Dallas Land Transfer Program allows nonprofit groups the opportunity to develop affordable housing by acquiring tax foreclosed vacant lots or surplus vacant lots from the City of Dallas' inventory. Both the land banking and land transfer programs are active within the City of Dallas.

Opportunity Investment Areas

Several areas within and surrounding the Trinity River Corridor have been identified by the City of Dallas as being *strategic opportunity investment areas* in terms of planning and infrastructure initiatives. The Oak Cliff/West Dallas opportunity area extends within the Indirect Impacts study boundary; the Fair Park, Central Business District, and Stemmons-Harry Hines Corridor are opportunity areas adjacent to the Indirect Impacts study boundary. Many City of Dallas priorities converge in these areas: priority areas of the Office of Economic Development; Dallas' Long Range Planning priorities based on *ForwardDallas!*; areas connecting emerging, redeveloping neighborhoods where focused investments can be utilized; police, park and recreation priority areas; and Trinity River Corridor Project opportunity areas.

Dallas Capital Bond Program

On November 7, 2006 citizens of Dallas approved a $1.35 Billion Capital Bond Program, the largest bond package ever approved by the City. The Bonds were issued incrementally over a 4.5-year period beginning in May 2007 for capital improvement. Projects were scheduled to be implemented over the following 6 years.

Projects within the 2006 Capital Improvement Program included such areas of need as street and transportation improvements, flood protection and storm drainage facilities, park and recreation facilities, library facilities, cultural arts facilities, city hall/city service and maintenance facilities, public safety facilities, and land acquisition for other projects within the city limits. Significant projects covered under the bond program include the Texas Horse Park, the expansion of the Dallas Zoo, renovations to the Union Station multi-modal facility, land acquisition for a new Dallas Police Academy, and two new downtown parks: Belo Garden and Main Street Garden.

The predominant capital improvement projects surrounding the proposed Trinity Parkway project area consist of street and transportation improvements. Twenty-two of these proposed street projects would

occur within close proximity of the Trinity Parkway project boundary. **Table L5 -2** lists these projects (City of Dallas, 2006e).

TABLE L5-2. PROPOSED CAPITAL IMPROVEMENT TRANSPORTATION PROJECTS WITHIN CLOSE PROXIMITY OF THE STUDY BOUNDARY

Proposed Project	Description	Est. Cost ($)
Beatrice Street	Street reconstruction from Comstock St to Commerce St	982,751
Bexar Street	Street reconstruction to widen to a five lane undivided roadway from Brigham Lane to Myrtle St	1,659,190
Bexar Street	Street reconstruction to widen to a four lane undivided roadway from the Dallas Floodway East Levee to Municipal St	3,828,900
Commerce Street	Street reconstruction from Dallas Floodway West Levee to Hampton Rd	2,000,000
Continental Avenue	Cost for engineering design and right-of-way to widen to 8 lane roadway with turn lanes and enhanced streetscape from Industrial Blvd to IH 35E	3,828,900
Continental Avenue Bridge	Miscellaneous bridge repair and modifications to be performed over Trinity River	127,630
Empire Central Place	Street reconstruction from Empire Central Dr to Empress Row	1,161,433
Englewood Road	Street reconstruction from Tilden St to Oakenwald St	232,826
Industrial Boulevard	Cost for design and right-of-way to reconstruct existing 6 and 8 lane roadway from Cadiz St to Continental Ave; construction to be funded in future as partnership with Dallas County and TxDOT with total estimated cost of $40 million	4,116,068
Irving Boulevard (North Service Road)	Street reconstruction from Mockingbird Lane to Woodall St	2,125,040
Morris Street	Street reconstruction from Sylvan Ave to Topeka Ave	175,000
Motor Street	Cost for design and right-of-way to widen existing roadway to 6 lane divided from IH 35E to Medical Center Dr and to rebuild TRE bridge; construction to be funded in future as partnership project with TxDOT with total estimated cost of $23.4 million	1,914,450
Oakenwald Street	Street reconstruction from Plowman Ave to Beckley Ave	413,225
Oakenwald Street	Street reconstruction from Zang Blvd to Plowman Ave	234,784
Oregon/Beckley Ave Connection	New 4 lane divided roadway that connects from the IH 30 EB frontage road to Beckley Ave at Oregon St	3,968,906
Plowman Avenue	Street reconstruction from Tilden St to Oakenwald St	319,439
Plowman Avenue	Street reconstruction from Oakenwald St to Zang Ave	213,350
Pueblo Street	Street reconstruction from Sylvan Ave to Bataan St	268,568
Pulaski Street	Street reconstruction from Irving Blvd to Halifax St	1,249,498
Sylvan Avenue	Cost for design and right-of-way for new six lane divided roadway from West Commerce St to Singleton Blvd with a new grade separation at the Union Pacific RR crossing	2,552,600
Sylvan Avenue	Street reconstruction to widen to a 6 lane divided roadway with a 15 foot median plus auxiliary turn lanes from IH 30 WB frontage road to Fort Worth Ave	1,719,379
Sylvan Avenue Bridge	New six lane bridge over Trinity River from Irving Blvd to Gallagher St; partnership project with TxDOT with total estimated cost of $30 million	8,255,108
Source: City of Dallas 2006 Capital Bond Program		

Other Public Facilities

Accessibility and availability of public facilities are important factors influencing development (i.e. with the presence of public facilities, improvements in access are more likely to facilitate land-use change). Major components of an extensive urban utility infrastructure are situated throughout the Trinity Corridor, primarily in areas south and east of Wycliff/Sylvan Avenue. This includes major service lines for drinking

water, stormwater, natural gas, telephone, television, sanitary sewer, and electricity. Many of the utilities and infrastructure improvements throughout the study area are financed through general bond monies in addition to special financing made available through the designated TIF and PID areas. Major utilities located in the study area are shown on SDEIS **Plates 3-11 through 3-13**.

3.4 Land Use Capacity and Development Potential

An assessment of land use capacity can provide a municipality with information which helps to monitor the acreage of developed versus undeveloped land supply, demographic trends, growth pressures, and development patterns. One form of land use capacity analysis is a build-out analysis. The purpose of a build-out analysis is to inform a municipality of what land is available for development, how much development can occur and at what densities, and what consequences may result when complete build-out of available land occurs in accordance with comprehensive plans.

Data obtained from the City of Dallas planning department suggests what percentage of land would be available for development through the build-out year of 2030 with an annual growth rate/land consumption rate of less than two percent. A closer examination of land use capacity is provided in **Table L5-3**. The majority of vacant and underutilized land in the City of Dallas is located in the Southern sector of Dallas (generally south of the Trinity River corridor and IH-30). This data provides a benchmark and snapshot in time, but does not account for other market factors favoring accelerated or stagnant development, proposed land development projects, nor does the data reflect future changes or amendments to the Dallas comprehensive plans.

TABLE L5-3. FUTURE LAND USE CAPACITY FOR THE CITY OF DALLAS

Area*	Developed Land (acres/percent of total acreage)	Developable Land (acres/percent of total acreage)	Undevelopable Land (acres/percent of total acreage)	Total Acreage	Build-out Acreage	Annual Growth Rate**	Build-Out Year
City of Dallas	135,327/55%	44,289/18%	66,434/27%	246,050	179,616	1.36%	2030

NOTES: *Based on 2006 estimates / **Based on best available straight-line projection estimates to year 2030.
Source: City of Dallas *Forward Dallas!* Comprehensive Plan

Within the indirect impacts study boundary an examination of land use capacity was performed to determine acres of land that would be available for future development or redevelopment. Approximately 1,486 acres would be available for development or redevelopment within the indirect impacts study area. **Table L5 -4** shows available acres for redevelopment within the indirect impacts study boundary by land use type. This total does not include a number of constraints that would curtail development within the indirect impacts study area including single-family residential zones, public facilities, planned

developments, major electric utilities, historic districts, parks, and floodplains. Constraint areas were determined using GIS to show areas within the Indirect Impacts Study Area that would be unsuitable or unlikely for future development or redevelopment activities (see SDEIS **Plate 4-38** *Indirect Effects Constraints Map*). The constraints map shown on **Plate 4-38** depicts shaded areas where indirect impacts would be unlikely. The remaining unshaded areas are judged potentially suitable for development or redevelopment. Given the soil and slope characteristics in the Indirect Impacts Study Area and the generally comprehensive urban development of areas near the Dallas Floodway, it was assumed that all unshaded areas on the map could support urban development or redevelopment. These unshaded areas were examined more closely, as described below to identify areas of the most probable induced land use change as a result of each of the Trinity Parkway Build Alternatives.

TABLE L5-4. AVAILABLE AREAS FOR REDEVELOPMENT WITHIN THE INDIRECT IMPACTS STUDY BOUNDARY

Commercial		Government/ Education		Industrial		Residential		Undeveloped		Infrastructure		[1]Total Acreage
Acres	%	Acres	%	Acres	%	Acres	%	Acres	%	Acres	%	
297.33	20.00	26.92	1.81	849.89	57.18	70.27	4.73	150.58	10.13	91.4	6.2	1,486.4

[1] Acreage calculated in GIS (2007), excludes reasonably foreseeable developments, floodplain, parklands, existing single family residential areas, major utilities, and historic districts.

A detailed examination of specific areas adjacent to each proposed alignment where induced land use change would have a higher probability of occurring was performed by examining GIS maps at the parcel level and schematic plans, and by applying, specific knowledge of the area and professional judgment. Similar methodologies were used in the SDEIS to determine indirect impacts to specific environmental resources by overlaying the footprint of indirect impacts for each Build Alternative with maps of spatial data representing each environmental resource or issue examined. Given that the Trinity Parkway is proposed as a limited access, tolled-facility, the most likely areas where future land use and/or development changes could occur are at proposed interchanges with major cross streets. The interchanges associated with each of the Trinity Parkway Build Alternatives are depicted in **Figure 4-3** in the Trinity Parkway SDEIS. The right-of-way acquisition process may, on certain tracts, convert ownership for only a portion of the property within the highway right-of-way footprint, leaving the remainder for potential redevelopment. **Table L5-5** lists the acres and land use types for the parcels within the indirect impacts study area that would have the highest probability for land use change prompted by the proposed project.

TABLE L5-5. REDEVELOPABLE AREAS BY LAND USE TYPE ALONG ALTERNATIVE ALIGNMENTS WITHIN THE INDIRECT IMPACTS STUDY BOUNDARY

Alts.	Commercial		Government/ Education		Industrial		Residential		Undeveloped		Infrastructure		[1]Total Acreage
	Acres	%	Acres	%	Acres	%	Acres	%	Acres	%	Acres	%	
2A	18.43	14.49	4.05	3.19	90.41	71.10	0.47	0.37	11.3	8.89	2.49	1.96	127.15
2B	21.38	18.64	3.56	3.10	71.94	62.71	0.08	0.07	13.3	6.91	4.46	11.6	114.72
3A	5.90	11.93	1.70	3.44	29.90	60.45	2.08	4.21	9.81	19.83	0.07	0.14	49.46
3B	5.79	10.16	1.70	2.98	37.51	65.80	2.08	3.65	9.80	17.19	0.13	0.23	57.01
3C	6.17	11.34	1.70	3.13	35.04	64.41	2.08	3.82	9.33	17.15	0.08	0.15	54.40
4A	5.90	8.38	0.46	0.65	37.99	53.94	2.08	2.95	23.20	32.94	0.80	1.14	70.43
4B	6.17	8.59	0.46	0.64	39.38	54.81	2.08	2.89	22.96	31.96	0.80	1.11	71.85
5	5.90	8.38	0.46	0.65	38.48	54.64	2.08	2.95	22.60	32.09	0.91	1.29	70.43

NOTES: The information for Alternatives 3A, 3B, and 4A is shaded to denote for the reader that these alternatives are not considered feasible by the USACE due to concerns detailed in Volume 1, Chapter 2, Section 2.3.9.
[1] Total acreage calculations are also consistent with the totals described in Table 4-51 "Summary of Indirect Effects for SDEIS Analysis" of the SDEIS.

3.5 Future Development Patterns in the Study Area

The forecasted developments embodied in the various plans and policy documents previously discussed assume that the proposed Trinity Parkway would be constructed. The No-Build Alternative would be incompatible with the plans and policies of the City of Dallas, Dallas County, and NCTCOG. Under the No Build scenario, the rate or pace of land development in the Lower Stemmons and Mix Master areas of Dallas could potentially be affected by prolonged traffic congestion and operational deficiencies; however, city planning efforts (including future land use plans and comprehensive plans which discuss development of the Trinity River Corridor as an urban park) along with other market factors would more likely influence development patterns within the indirect impacts study area. These other market factors include the state of the regional economy, amount of vacant land, location attractiveness (i.e., quality of existing development, local politics, and growth history), regulatory conditions (incentives for development), and the extent and maturity of the transportation system. The City of Dallas supports the construction of the Trinity Parkway and has formally stated their support for the project. The basic land use patterns surrounding the anticipated construction of the Trinity Parkway are reflected in the City of Dallas planning documents. The proposed facility has been planned for many years, and land use planning for the region reflects the anticipated presence of the Trinity Parkway. If the Trinity Parkway is not constructed, the City of Dallas, Dallas County, and NCTCOG may have to modify their land use and/or transportation plans to rely on other assumptions for encouraging development within the study area, provide other means of mobility, or both.

Under the Build Scenario, it is unlikely that the comprehensive plans and associated zoning would change because the proposed Trinity Parkway facility is a planned transportation corridor that would

benefit from coordinated design, infrastructure, and compatibility of land uses set forth by the City Dallas and NCTCOG.

The forecasted developments embodied in the various plans and policy documents previously discussed assume that the proposed Trinity Parkway facility would be constructed.

3.6 Travel Performance Estimates

This aspect of the analysis is subject to change pending the 2009 update to the MTP. Travel time and traffic volumes (and perceived/real economic impact) are key transportation measures for estimating impacts on residential and commercial development. Larger volumes that result from transportation improvements could support an increase of demand and prices bid for retail properties along a corridor, which in turn contributes to the potential for land-use changes. Key questions are (1) whether that potential is sufficient to cause property owners and developers to build faster and differently than they would have, and (2) whether the comprehensive plan would have to be changed in any significant way (e.g. zoning, comprehensive plan designations, city limits, urban growth boundaries) to allow that change in development. Key transportation variables of interest for land use analysis are change in travel time, traffic volumes, and mobility.

Changes in Accessibility

Changes in accessibility are most readily analyzed by comparing differences in travel time, congestion delay, levels of service, and average speed along a particular facility or study area. For the proposed project, changes in accessibility were analyzed for the 2030 No Build versus the eight 2030 Build alternatives. Utilizing a 45.68 square mile traffic study area developed by the NCTCOG, performance reports were generated for freeways, frontage roads, principal and minor arterials, collector roads, freeway ramps and managed HOV lanes within the traffic study area. These performance reports allowed for direct comparison of average trip times, changes in average speed, levels of service and total trips within the traffic study area. **Table L5-6** provides data pertaining to the 2030 average loaded speed on the various roadway classifications for the No Build and Build alternatives. The average loaded speed is the average speed on roadways with traffic on the road; it is the volume-weighted average of loaded speed. The value is given in miles per hour (mph).

TABLE L5-6. 2030 AVERAGE LOADED SPEED (MPH)

Roadway Classification	No Build			Build				% Change		
	AM	PM	Daily	Alts.	AM	PM	Daily	AM	PM	Daily
Freeways (includes toll roads)	50.05	50.81	54.15	**2A/2B**	50.36	50.50	54.09	0.62	-0.61	-0.11
				3A	50.51	50.76	54.20	0.92	-0.10	0.09
				3B/3C	50.21	50.63	54.04	0.32	-0.35	-0.20
				4A/4B/5	50.26	50.51	54.08	0.42	-0.59	-0.13
Principal Arterials	20.78	21.11	23.14	**2A/2B**	21.18	21.73	23.44	1.92	2.94	1.30
				3A	21.61	22.12	23.73	3.99	4.78	2.55
				3B/3C	21.66	22.23	23.84	4.23	5.31	3.03
				4A/4B/5	21.27	21.79	23.38	2.36	3.22	1.04
Minor Arterials	17.03	17.07	17.72	**2A/2B**	17.11	17.17	17.73	0.47	0.59	0.06
				3A	17.26	17.20	17.77	1.35	0.76	0.28
				3B/3C	17.20	17.21	17.79	1.00	0.82	0.40
				4A/4B/5	17.14	17.15	17.72	0.65	0.47	0.00
Collectors	19.47	19.42	20.53	**2A/2B**	18.80	18.73	19.63	-3.44	-3.55	-4.38
				3A	18.77	18.77	19.63	-3.60	-3.35	-4.38
				3B/3C	19.44	19.38	20.28	-0.15	-0.21	-1.22
				4A/4B/5	19.51	19.46	20.51	0.21	0.21	-0.10
Freeway Ramps	29.62	32.97	35.29	**2A/2B**	31.71	34.27	36.69	7.06	3.94	3.97
				3A	31.73	33.86	36.29	7.12	2.70	2.83
				3B/3C	31.77	33.11	35.84	7.26	0.42	1.56
				4A/4B/5	30.58	33.29	35.78	3.24	0.97	1.39
Frontage Roads	22.29	22.23	24.51	**2A/2B**	23.60	23.76	25.80	5.88	6.88	5.26
				3A	22.11	22.73	24.53	-0.81	2.25	0.08
				3B/3C	22.74	21.99	24.49	2.02	-1.08	-0.08
				4A/4B/5	22.63	22.52	24.57	1.53	1.30	0.24
HOV Lanes (includes managed lanes)	47.30	48.27	47.99	**2A/2B**	48.57	50.80	50.14	2.68	5.24	4.48
				3A	48.26	50.16	49.67	2.03	3.92	3.50
				3B/3C	47.17	49.68	48.86	-0.27	2.92	1.81
				4A/4B/5	48.17	50.67	49.88	1.84	4.97	3.94

Source: NCTCOG TransCAD® data for 2030 daily traffic Build and No Build scenarios within the traffic study area (Complete Performance Reports, December 2007).

Average Loaded Speed Comparison Summary of 2030 No Build to Build Alternatives

- Alternatives 2A/2B provided a slight increase (0.06 to 5.26 percent) in daily average loaded speed for principal and minor arterials, freeway ramps, frontage roads, and HOV lanes; there was a small decrease in daily average loaded speed for freeways (-0.11 percent) and collectors (-4.38 percent).
- Alternative 3A provided a slight increase (0.09 to 3.50 percent) in daily average loaded speed for all roadway classification types except collectors, which had a minor decrease in daily average loaded speed (-4.38 percent).
- Alternatives 3B/3C provided a small increase (0.40 to 3.03 percent) in daily average loaded speed for principal and minor arterials, freeway ramps, and HOV lanes; there was a slight decrease (-0.08 to -1.22 percent) in daily average loaded speed for freeways, connectors, and frontage roads.
- Alternatives 4A/4B/5 provided a minor increase (0.24 to 3.94 percent) in daily average loaded speed for principal and minor arterials, freeway ramps, frontage roads, and HOV lanes; there

was a less than 1 percent decrease in daily average loaded speed for freeways (-0.13 percent) and collectors (-0.10 percent).

The predominant increase in average loaded speed indicates that the average trip times on the various roadways generally would be less in the Build scenario as compared to the No Build scenario.

Table L5-7 compares the level of service (LOS) for the 2030 No Build and 2030 Build alternatives within the traffic study area. LOS is a quality measure describing operational conditions within a traffic stream, generally in terms of such service measures as speed and travel time, freedom to maneuver, traffic interruptions, and comfort and convenience. Six levels are defined. Letters designate each level, from A to F, with LOS A representing the best operating conditions and LOS F the worst. Traditionally, a facility is considered to have reached capacity at LOS E. Each level of service represents a range of operating conditions and the driver's perception of those conditions. According to the Highway Capacity Manual, LOS measures vary, depending on facility type. For interstates and divided highways, LOS is determined as a function of density; that is, the number of vehicles per lane per mile of roadway. For arterial streets, LOS determination is based on the average travel speed of the vehicles traveling the defined section. At intersections, both signalized and unsignalized, LOS is a function of delay. For two-lane highways, LOS is determined according to two measures - percent time spent following (which represents the freedom to maneuver and the comfort and convenience of travel) and average travel speed (2000 Highway Capacity Manual, Transportation Research Board).

TABLE L5-7. LEVEL OF SERVICE FOR INDIRECT IMPACTS STUDY AREA (2030)

Roadway Classification	LOS No Build Scenario	LOS Build Alternatives 2A/2B	LOS Build Alternative 3A	LOS Build Alternatives 3B/3C	LOS Build Alternatives 4A/4B/5
Freeways (includes toll roads) (298.9 total lane-miles - No Build) (324.3 total lane-miles - 2A/2B) (329.4 total lane-miles - 3A) (318.0 total lane-miles - 3B/3C) (326.0 total lane-miles - 4A/4B/5)	A-B-C (50.71 lane-miles)	A-B-C (65.1 lane-miles)	A-B-C (77.5 lane-miles)	A-B-C (57.0 lane-miles)	A-B-C (71.6 lane-miles)
	D-E (140.3 lane-miles)	D-E (160.1 lane-miles)	D-E (156.5 lane-miles)	D-E (160.2 lane-miles)	D-E (147.3 lane-miles)
	F (107.9 lane-miles)	F (99.1 lane-miles)	F (95.4 lane-miles)	F (100.8 lane-miles)	F (107.1 lane-miles)
Principal Arterials (317.3 total lane-miles - No Build) (288.7 total lane-miles - 2A/2B) (316.2 total lane-miles - 3A) (329.0 total lane-miles - 3B/3C) (300.8 total lane-miles - 4A/4B/5)	A-B-C (144.4 lane-miles)	A-B-C (151.4 lane-miles)	A-B-C (159.6 lane-miles)	A-B-C (167.5 lane-miles)	A-B-C (152.1 lane-miles)
	D-E (64.1 lane-miles)	D-E (65.2 lane-miles)	D-E (83.5 lane-miles)	D-E (85.9 lane-miles)	D-E (71.1 lane-miles)
	F (108.8 lane-miles)	F (72.1 lane-miles)	F (73.2 lane-miles)	F (75.6 lane-miles)	F (77.6 lane-miles)
Minor Arterials (250.1 total lane-miles - No Build) (245.9 total lane-miles - 2A/2B) (245.2 total lane-miles - 3A) (247.7 total lane-miles - 3B/3C) (243.1 total lane-miles - 4A/4B/5)	A-B-C (185.61 lane-miles)	A-B-C (188.7 lane-miles)	A-B-C (186.9 lane-miles)	A-B-C (189.8 lane-miles)	A-B-C (182.5 lane-miles)
	D-E (39.5 lane-miles)	D-E (38.6 lane-miles)	D-E (39.9 lane-miles)	D-E (37.5 lane-miles)	D-E (40.9 lane-miles)
	F (25.0 lane-miles)	F (18.6 lane-miles)	F (18.4 lane-miles)	F (20.4 lane-miles)	F (19.7 lane-miles)
Collectors (218.1 total lane-miles - No Build) (204.7 total lane-miles - 2A/2B) (207.6 total lane-miles - 3A) (220.5 total lane-miles - 3B/3C) (220.5 total lane-miles - 4A/4B/5)	A-B-C (180.03 lane-miles)	A-B-C (176.2 lane-miles)	A-B-C (179.5 lane-miles)	A-B-C (192.2 lane-miles)	A-B-C (187.5 lane-miles)
	D-E (22.1 lane-miles)	D-E (12.2 lane-miles)	D-E (12.9 lane-miles)	D-E (12.6 lane-miles)	D-E (18.4 lane-miles)
	F (16.1 lane-miles)	F (16.3 lane-miles)	F (15.2 lane-miles)	F (15.7 lane-miles)	F (14.6 lane-miles)
Freeway Ramps (73.0 total lane-miles - No Build) (74.9 total lane-miles - 2A/2B) (82.1 total lane-miles - 3A) (83.4 total lane-miles - 3B/3C) (83.2 total lane-miles - 4A/4B/5)	A-B-C (35.71 lane-miles)	A-B-C (41.7 lane-miles)	A-B-C (47.1 lane-miles)	A-B-C (48.9 lane-miles)	A-B-C (48.9 lane-miles)
	D-E (10.8 lane-miles)	D-E (10.7 lane-miles)	D-E (13.1 lane-miles)	D-E (12.5 lane-miles)	D-E (9.7 lane-miles)
	F (26.5 lane-miles)	F (22.6 lane-miles)	F (21.9 lane-miles)	F (15.7 lane-miles)	F (24.6 lane-miles)
Frontage Roads (82.0 total lane-miles - No Build) (155.9 total lane-miles - 2A/2B) (82.0 total lane-miles - 3A) (85.5 total lane-miles - 3B/3C) (82.0 total lane-miles - 4A/4B/5)	A-B-C (51.6 lane-miles)	A-B-C (72.4 lane-miles)	A-B-C (56.9 lane-miles)	A-B-C (56.1 lane-miles)	A-B-C (53.8 lane-miles)
	D-E (7.8 lane-miles)	D-E (20.1 lane-miles)	D-E (10.7 lane-miles)	D-E (14.5 lane-miles)	D-E (13.4 lane-miles)
	F (22.5 lane-miles)	F (23.4 lane-miles)	F (14.4 lane-miles)	F (14.9 lane-miles)	F (14.8 lane-miles)
HOV Lanes (includes managed lanes) (54.7 total lane-miles - No Build) (70.2 total lane-miles - 2A/2B) (70.2 total lane-miles - 3A) (70.2 total lane-miles - 3B/3C) (70.2 total lane-miles - 4A/4B/5)	A-B-C (25.04 lane-miles)	A-B-C (45.9 lane-miles)	A-B-C (44.1 lane-miles)	A-B-C (40.1 lane-miles)	A-B-C (45.9 lane-miles)
	D-E (19.6 lane-miles)	D-E (16.4 lane-miles)	D-E (18.1 lane-miles)	D-E (22.2 lane-miles)	D-E (16.4 lane-miles)
	F (10.1 lane-miles)	F (7.9 lane-miles)	F (8.0 lane-miles)	F (7.9 lane-miles)	F (7.9 lane-miles)
Source: NCTCOG TransCAD® data for 2030 daily traffic Build and No Build scenarios (Complete Performance Reports, December 2007)					

Level of Service Comparison Summary of 2030 No Build to Build Alternatives

- Alternatives 2A/2B - The No Build alternative had 673 total lane-miles operating at LOS A-B-C and the Build alternative had 742 total lane-miles operating at LOS A-B-C. This represents a 10 percent increase in lane-miles in the traffic study area operating at LOS A-B-C. The No Build alternative had 317 total lane-miles operating at LOS F and the Build alternative had 260 total lane-miles operating at LOS F. This represents an 18 percent decrease in lane-miles operating at LOS F.
- Alternative 3A - The No Build alternative had 673 total lane-miles operating at LOS A-B-C and the Build alternative had 752 total lane-miles operating at LOS A-B-C. This represents a 12 percent increase in lane-miles in the traffic study area operating at LOS A-B-C. The No Build alternative had 317 total lane-miles operating at LOS F and the Build alternative had 247 total lane-miles operating at LOS F. This represents a 22 percent decrease in lane-miles operating at LOS F.
- Alternatives 3B/3C - The No Build alternative had 673 total lane-miles operating at LOS A-B-C and the Build alternative had 752 total lane-miles operating at LOS A-B-C. This represents a 12 percent increase in lane-miles in the traffic study area operating at LOS A-B-C. The No Build alternative had 317 total lane-miles operating at LOS F and the Build alternative had 257 total lane-miles operating at LOS F. This represents a 19 percent increase/decrease in lane-miles operating at LOS F.
- Alternatives 4A/4B/5 - The No Build alternative had 673 total lane-miles operating at LOS A-B-C and the Build alternative had 742 total lane-miles operating at LOS A-B-C. This represents a 10 percent increase in lane-miles in the traffic study area operating at LOS A-B-C. The No Build alternative had 317 total lane-miles operating at LOS F and the Build alternative had 266 total lane-miles operating at LOS F. This represents a 16 percent decrease in lane-miles operating at LOS F.

The LOS comparison summaries above indicate that all of the 2030 Build alternatives (2A, 2B, 3A, 3B, 3C, 4A, 4B, and 5) are predicted to have more lane-miles functioning at the favorable operating condition of LOS A-B-C in the traffic study area and less lane-miles operating at LOS F compared to the No Build alternative. While not a large difference, it would be indicative of enhanced mobility on the proposed Trinity Parkway facility and the congestion relief provided to roadways in the surrounding area.

4.0 ASSESSMENT OF INDIRECT LAND USE IMPACTS

4.1 Potential for Land Use Change Assessment

As discussed in the previous sections of this indirect impacts analysis, the potential for land use change can be measured by changes in accessibility, changes in property value, expected growth, the relationship between land supply and demand, and availability of public services, market factors, and public policy. The population, employment, and land use forecasts described in this assessment presume the construction of the Trinity Parkway. **Table L5-8** summarizes the indirect land use effects for the proposed facility. The summary is based on quantitative and qualitative assessments of the indirect impacts study area and is based on thresholds and assumptions described in NCHRP 25-25 (Task 22).

TABLE L5-8. ASSESSMENT OF INDIRECT LAND USE IMPACTS

Change	Data Sources	Conditions Within the Indirect Impacts Study Area	Alts.	Potential for Land Use Change
Change in accessibility *Measured as change in travel time or delay, if available. Otherwise, assessment of volume/capacity (level of service) or change in access*	NCTCOG Complete Performance Reports	Because the Trinity Parkway is a proposed new location limited-access toll facility, it would change accessibility and mobility in the study area by managing congestion on IH 35E (Stemmons and South R.L. Thornton Freeways, IH 30 (Tom Landry Freeway and East R.L. Thornton Freeway) SH 183 (Airport Freeway), SH 114, and IH-45. Although modest differences are shown between the No Build and Build Alternatives for each alignment, the expectation is that a percentage of traffic would most likely shift to the new facility and improve travel time, manage congestion within and along the existing roadway network, and could improve LOS within the project setting. Under the Build Scenario, the reduction in lane miles functioning at LOS F was reduced from 16% to 22% among the various alternatives.	2A/2B 3A 3B/3C 4A/4B/5	Moderate
Change in property value *Measured in dollars*	Review of Trinity Corridor Comprehensive Land Use Plan Consultation with the City of Dallas Planning department	As part of Phase 3 of the Trinity Parkway Comprehensive Land Use Plan process, a comparative economic impact and cost/benefit analysis was conducted by the City in 2002 to assess the proposed alignment alternatives (including No Build), and their relationship to the future land use planning scenarios for various sub-areas in the City of Dallas. The amount of development that was expected during the first twenty years after project completion was projected based on two different levels of public involvement in supporting redevelopment. The economic impact of public and private investments towards year 2050 was measured in terms of economic impacts, direct & indirect employment impacts, direct & indirect tax impacts, and cost/benefit impact. Tax benefits to the City of Dallas and the State of Texas as a result of public and private employment and project spending are anticipated to increase as a result of the proposed construction of Trinity Parkway.	2A/2B 3A 3B/3C 4A/4B/5	Moderate
Forecasted growth *Measured as population/ employment, land development trends in the City of Dallas*	NCTCOG 2030 Forecast Land Use Capacity Analysis (data supplied by NCTCOG and the City of Dallas)	An average annual growth rate for the City of Dallas is 1.65% (ratio of population to employment). Construction of the Trinity Parkway has been taken into consideration by NCTCOG and the City of Dallas planning forecasts for decades. In anticipation of the project to accommodate the Mobility 2030 planning horizon, the annual rate of development growth within the City of Dallas is estimated to be 1.36%. The City of Dallas has more than a 20 year supply of developable land, primarily located in the southern sector of the City. When compared to the 9-County NCTCOG metropolitan planning area, the study area's population and employment forecasts reflect more conservative growth. Therefore, if the construction of the Trinity Parkway does not take place, it is expected that the forecasted growth rates may change. Reasonably foreseeable developments are anticipated to be constructed as planned and scheduled.	2A/2B 3A 3B/3C 4A/4B/5	Moderate
Relationship between supply and demand *Measured as population, employment, land development*	Planning documents (data supplied by the City of Dallas, see Section 3.3)	The percentage of undeveloped land for the City of Dallas and is approximately 18 percent. The annual rate of land use development/consumption is approximately 1.36% for an anticipated build-out year for the study area to year 2030. The construction of the proposed toll facility has been taken into consideration by the City of Dallas for decades. The 2005 Trinity River Corridor Comprehensive land use plan considered the influence of the proposed facility on land use. The document determined that the Trinity Parkway would have indirect impacts to land use (rate, type, amount, and pattern) in the South Lamar Industrial District (located along the westerly side of S. M. Wright Freeway from the Trinity floodplain on the southeast to IH-45 on the northwest),	2A/2B 3A 3B/3C	Moderate

Change	Data Sources	Conditions Within the Indirect Impacts Study Area	Alts.	Potential for Land Use Change
		Reunion Boulevard, La Bajada neighborhood near Woodall Rodgers, and along Oaklawn Avenue. According to the land use plan, communities in these areas have a reasonable expectation that development would be influenced by the Trinity Parkway.	4A/4B/5	
Availability of Non-Transportation Services	Planning documents (data supplied by the City of Dallas, see Section 3.3)	Various capital improvements to non-transportation services have occurred and are scheduled within Neighborhood Investment Program (NIP) areas, Public Improvement Districts (PIDs) and Tax Increment Financing (TIF) Districts, immediately adjacent to the Indirect Impacts Study Area. Some of these improvements include utility improvements, sidewalks, streetscape improvements, recreational and open space improvements, and mixed use developments. Many of the neighboring TIF Districts have stated as part of their mission, a goal to capitalize on future investments/developments within the Trinity Corridor. These capital investments are occurring in order to entice future development within the District, and extend the development opportunities into the Trinity Corridor. The induced development facilitated by non-transportation services would be drawn to the area primarily by the proposed park and recreational opportunities in the corridor, rather than the presence of the Trinity Parkway. All of the capital improvements proposed in the TIF Districts would be expected to continue regardless of which Trinity Parkway Alternative is selected. Should major development occur within the study area, additional utilities would be needed in the West Dallas and Stemmons Corridor area between Westmoreland Road/Mockingbird Lane and Wycliff/Sylvan Avenue.	2A/2B 3A 3B/3C 4A/4B/5	Moderate
Other factors that impact the market for development	Current economic development activities in the surrounding area Capital Improvement Projects Comprehensive Plans	The City of Dallas Economic Development Department developed a 2008 list of catalyst projects which may influence population and employment in the region. Some of these major catalyst projects include the Victory Park development north of the CBD, the Arts District Expansion, the International Inland Port of Dallas, several mixed use developments, and the University of North Texas (South Dallas Campus). The Trinity Parkway may have a role in facilitating travel to these new developments, which may ultimately influence the rate of development around these locations. DART identified areas in the vicinity of the proposed Trinity Parkway as having a potential for a strong market for transit oriented development at Hatcher, Scyene, and potentially at 8th and Corinth. Planning documents exist within the City of Dallas for the continuation of development activities toward the MTP year 2030. The construction of Trinity Parkway is considered in many development plans for the study area, and the capacity/mobility benefits of the Trinity Parkway are not anticipated to adversely affect the future opportunities for development. Construction of the Build alternative may have some indirect impact on the rate of development both inside and outside the indirect impacts study area due to the expectation that the Parkway design would provide access to the proposed park and recreational amenities in the Trinity River corridor. Local communities along the corridor are planning for an economic development boost associated with interchange access and the downgrade of SM Wright from a freeway to urban boulevard, thereby reducing traffic, which opens up opportunities for development.	2A/2B 3A 3B/3C 4A/4B/5	Moderate

Change	Data Sources	Conditions Within the Indirect Impacts Study Area	Alts.	Potential for Land Use Change
Public policy	City of Dallas Planning Documents (see Section 3.3)	The construction of the proposed project has been planned for many years, and land use planning for the region reflects the anticipated presence of the facility. The land use planning tools (Comprehensive Plans, Future Land Use Plans, Thoroughfare Plans) have taken into consideration potential indirect impacts, and exist to guide the desired land use/transportation changes that would result from the construction of the proposed Trinity Parkway. With the development of the *FowardDallas!* Plan, and the Trinity River Corridor Comprehensive Land Use Plan highlighting recommended changes to existing zoning codes and land use, along with smaller neighborhood plans containing strong economic development goal, a heightened level of attention would be paid to strong land use policy enforcement.	2A/2B	Moderate
			3A	
			3B/3C	
			4A/4B/5	
Source: Table and qualitative measures adapted from NCHRP 25-25 Task 22, page 59 (ECONorthwest)				

4.2 Potential Land Use Changes and Compatibility with Land Use Plans

As summarized from the Table, the proposed Trinity Parkway would have a “Moderate” potential for land use change. A “Moderate” determination would mean the proposed action could potentially induce changes in land use (rate, type, pattern, amount) and this would occur at a reasonably even pace for the region; changes expected would be conversions from older land use types to new types (i.e. old industrial parks to mixed use facilities, multi-family areas converted to single family homes, etc.). Some land use changes from vacant to more developed would occur, or existing areas would be encouraged to revitalize. A “Moderate” rating also indicates that the proposed project is consistent with local planning documents and land use expectations, and may have the potential to spur development patterns beyond the indirect impacts study area. According to the Comprehensive Land Use Plan for the Trinity River Corridor, the Trinity Parkway would play a role in opening up land opportunities for areas considered risky or unfavorable to development (Trinity River Corridor Comprehensive Plan, page 73). However, because the primary and strong driver of land use change and economic development in the Trinity Corridor would be the proposed plans for floodway extension and flood protection and the proposed park and recreational amenities associated with the 1998 Dallas Bond program, the Trinity Parkway element was given a “Moderate” rating.

Trinity Parkway facility is primarily a limited-access reliever route that would provide congestion relief in the City of Dallas CBD and outlying areas. Though the Parkway is an important element of the Trinity Corridor Balanced Vision Plan, when analyzed apart from the array of park and recreational amenities, flood protection, community development and reinvestment opportunities, the indirect impacts of the facility would appear to be moderate. Minimal changes in accessibility, as measured in travel time savings and level of service, were the driving factors determining the “Moderate” link between the proposed transportation project and potential for induced land use change. In addition, the comprehensive plans that dictate land use development in the study area presume the amount of growth and the level of services to remain consistent with the construction of the Trinity Parkway facility.

Discussions with City of Dallas public officials and agency staff in June, 2008 confirmed the “Moderate” assessment rating for land use change. The public officials believe, and the comprehensive land use planning documents substantiate that the overwhelming catalyst for land use change would be attributed to the proposed park and recreational amenities proposed in the Trinity River Corridor Balanced Vision Plan (see **Plate 3-7** in the SDEIS). These officials point out that changes are occurring within the West Dallas region as investors begin to purchase hundreds of properties, many near the west end of the planned Margaret Hunt Hill Bridge. Investors have purchased more than 500 properties in West Dallas between the Trinity River and Interstate 30, a possible sign of future planning efforts responding to the multitude of planned projects (parks, lakes, trails, etc.) in the Trinity Corridor area *(Dallas Morning News,*

May 31, 2008). These officials acknowledged that induced land use change would be experienced to varying degrees across all of the Trinity Parkway Alternatives, would be largely dependent on the access provided to the Trinity Parkway facility from local streets and arterials, and would be dependent on how well the Trinity Parkway would facilitate pedestrian/bicycle and automobile access to the Trinity Corridor amenities. Proposed access improvement, such as frontage road access adjacent to the Trinity Parkway's southern terminus, is an example of a Trinity Parkway design aspect that could have indirect land use impacts. Currently, neighborhoods located in South Dallas and Rochester Park neighborhoods have formed a reasonable expectation that frontage road access to the Trinity Parkway would encourage future commercial and retail investment.

The No Build scenario would be inconsistent with long-range transportation and comprehensive plans in the City of Dallas. With respect to transportation and land use, under the No Build, desirability for development/redevelopment or infill development could potentially decrease as the radial freeways around the Dallas CBD (including IH-35-E, IH-45, SH 183, SH 114, and IH 30) experience increased capacity and congestion along outlying segments, thereby further hindering access to adjacent parcels slated for development.

4.3 Policies to Mitigate Potential Land Use Impacts

Land development activities would generally be private ventures that would be regulated by the City of Dallas land development ordinances. The local government regulation of land development necessarily addresses environmental and social impacts by requiring mitigation as part of site design and construction such that development/redevelopment is in accordance with overall city objectives. In addition, much of the discussion of agencies and programs that would guide any development/redevelopment induced by a potential project would be similar to the mitigation and permitting measures discussed in the SDEIS. For example all development would have to comply with flood control regulations under the Federal Emergency Management Act (FEMA) and local floodplain administration; the Clean Water Act (CWA), Section 401 Water Quality Certification requirements, Section 404 permits for projects affecting Waters of the U.S., and other regulations requiring mitigation if there are affects on species habitat.

THIS PAGE INTENTIONALLY LEFT BLANK

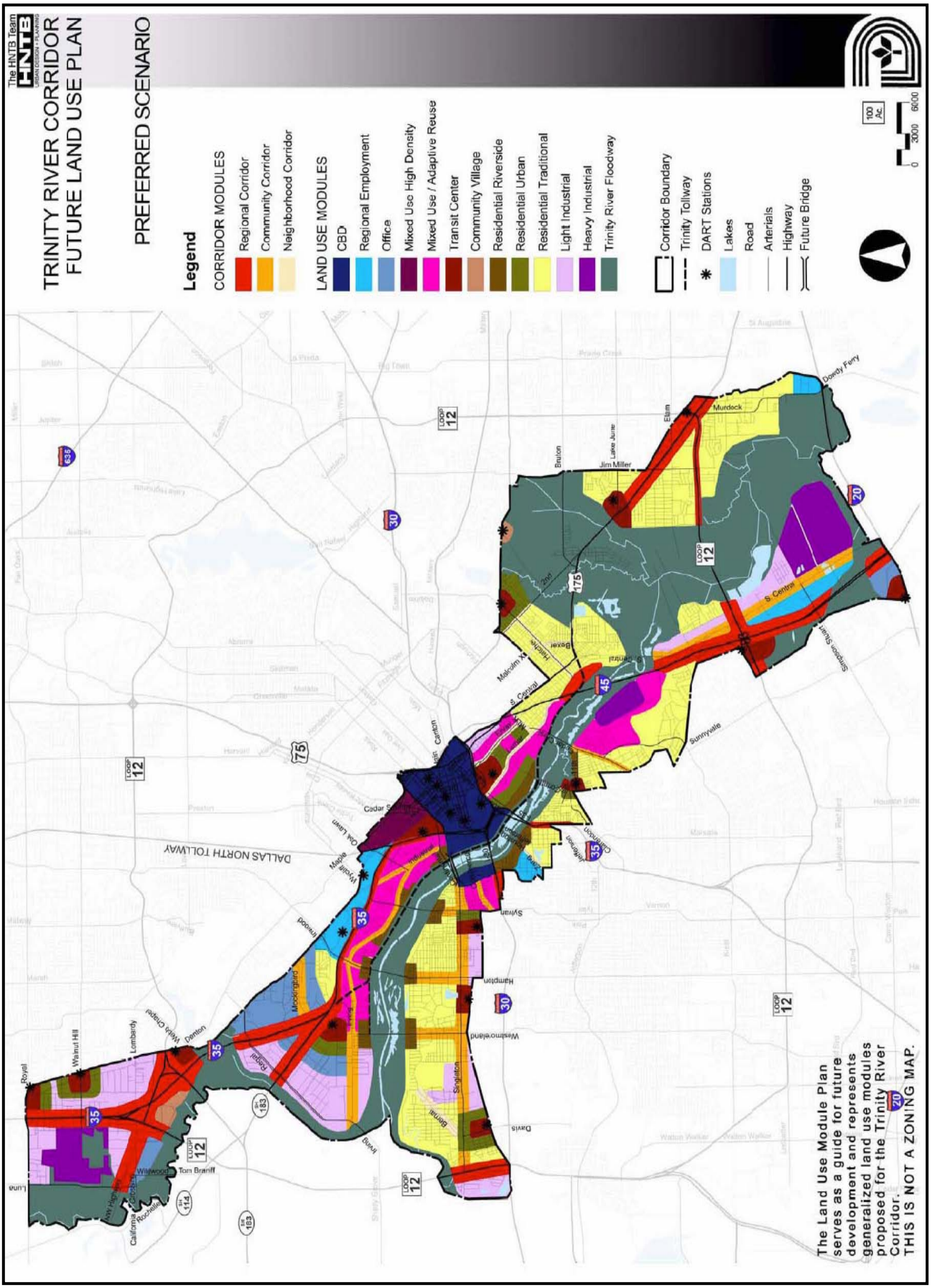
The HNTB Team
HNTB
URBAN DESIGN • PLANNING
TRINITY RIVER CORRIDOR
FUTURE LAND USE PLAN
PREFERRED SCENARIO
Legend
CORRIDOR MODULES
Regional Corridor
Community Corridor
Neighborhood Corridor
LAND USE MODULES
CBD
Regional Employment
Office
Mixed Use High Density
Mixed Use / Adaptive Reuse
Transit Center
Community Village
Residential Riverside
Residential Urban
Residential Traditional
Light Industrial
Heavy Industrial
Trinity River Floodway
Corridor Boundary
Trinity Tollway
DART Stations
Lakes
Road
Arterials
Highway
Future Bridge
0 3000 6000
100 Ac.
DALLAS NORTH TOLLWAY
The Land Use Module Plan serves as a guide for future development and represents generalized land use modules proposed for the Trinity River Corridor.
THIS IS NOT A ZONING MAP.

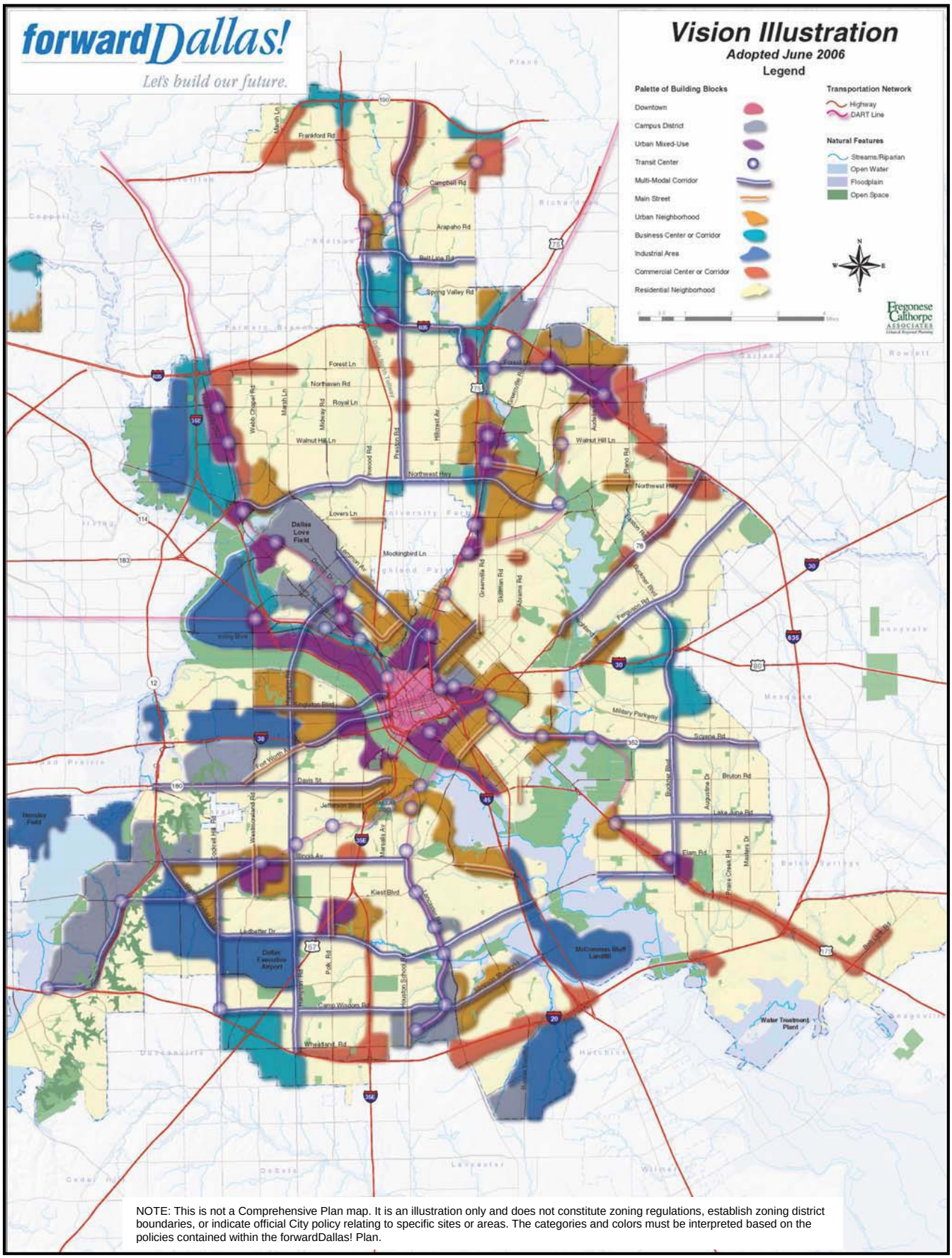
forwardDallas!
Let's build our future.
Vision Illustration
Adopted June 2006
Legend
Palette of Building Blocks
Downtown
Campus District
Urban Mixed-Use
Transit Center
Multi-Modal Corridor
Main Street
Urban Neighborhood
Business Center or Corridor
Industrial Area
Commercial Center or Corridor
Residential Neighborhood
Transportation Network
Highway
DART Line
Natural Features
Streams/Riparian
Open Water
Floodplain
Open Space
Fregonese Calthorpe ASSOCIATES
Frankford Rd
Campbell Rd
Arapaho Rd
Belt Line Rd
Spring Valley Rd
Forest Ln
Northaven Rd
Royal Ln
Walnut Hill Ln
Northwest Hwy
Lovers Ln
Dallas Love Field
Mockingbird Ln
Greenville Rd
Skillman Rd
Abrams Rd
Buckner Blvd
Ferguson Rd
Military Parkway
Scyene Rd
Bruton Rd
Lake June Rd
Elam Rd
Davis St
Jefferson Blvd
Kiest Blvd
Ledbetter Dr
Dallas Executive Airport
Camp Wisdom Rd
Wheatland Rd
McCommas Bluff Landfill
Water Treatment Plant
NOTE: This is not a Comprehensive Plan map. It is an illustration only and does not constitute zoning regulations, establish zoning district boundaries, or indicate official City policy relating to specific sites or areas. The categories and colors must be interpreted based on the policies contained within the forwardDallas! Plan.

APPENDIX L-6

TRAFFIC REDISTRIBUTION

THIS PAGE INTENTIONALLY LEFT BLANK

Difference in Traffic Volume - Trinity Parkway Alternatives 2A & 2B

Link ID	Street Name	Street From (Street A)	Street To (Street B)	2030 No Build			2030 Build			Difference Daily Volume
				LOS Street A to B	LOS Street B to A	Daily Volume	LOS Street A to B	LOS Street B to A	Daily Volume	
22451009	CANADA DR	HOLYSTONE	HAMPTON RD	DE	DE	18240	DE	ABC	28849	10609
22450506	CANADA DR	MOCKINGBIRD W	RUPERT	ABC	ABC	17594	ABC	ABC	28253	10659
22450525	CANADA DR	RUPERT MOCKINGBI	HOLYSTONE	ABC	ABC	17594	ABC	ABC	28253	10659
19080704	CANADA DR	BORGER ST	SINGLETON CONTIN	ABC	ABC	16402	ABC	ABC	20646	4244
19080506	CANADA DR	VILBIG	BORGER	ABC	DE	15873	ABC	ABC	20153	4280
19080001	CANADA DR	HAMPTON RD	VILBIG	DE	DE	16500	ABC	ABC	21978	5478
19081009	CANADA DR	SINGLETON RAMP	SINGLETON RAMP	ABC	ABC	12783	ABC	ABC	22529	9746
15481500	CEDAR CREST BLVD	PONTIAC	MORRELL	ABC	ABC	15504	ABC	ABC	16050	546
15482003	CEDAR CREST BLVD	MORRELL	KIEST BLVD	ABC	ABC	15686	ABC	ABC	15860	174
14500005	CORINTH	INDUSTRIAL BLVD	INDUSTRIAL BLVD	F	F	27844	ABC	F	26298	-1546
18191007	CORINTH ST	ERVAY ST	AKARD ST	ABC	ABC	20986	ABC	ABC	14593	-6393
14501308	CORINTH ST	11TH ST	MORELL AVE	ABC	ABC	21149	ABC	ABC	23037	1888
14501001	CORINTH ST	CLARENDON DR	11TH ST	ABC	DE	25067	ABC	DE	27103	2036
14500508	CORINTH ST	8TH ST	CLARENDON DR	DE	F	29594	DE	F	31708	2114
18191502	CORINTH ST	AKARD ST	LAMAR ST	F	DE	24669	F	ABC	20375	-4294
18192005	CORINTH ST	LAMAR ST	INDUSTRIAL	DE	F	26048	DE	DE	20531	-5517
18190504	CORINTH ST	HARWOOD ST	ERVAY ST	ABC	ABC	21210	ABC	ABC	13808	-7402
18190009	CORINTH ST	CENTRAL EXPWY	HARWOOD ST	F	F	41712	F	DE	22375	-19337
14500007	CORINTH ST VIADUCT	TRINITY ONRAMP N	8TH ST	DE	DE	27844	DE	F	32174	4330
16121006	DOLPHIN RD	IH30 RAMP EB	HASKELL AVE	ABC	ABC	16769	ABC	ABC	17494	725
19250505	HAMPTON RD	BICKERS ST	DENNISON	ABC	ABC	35100	ABC	ABC	33964	-1136
19251503	HAMPTON RD	SINGLETON	COMMERCE	F	F	43631	F	F	42080	-1551
19251008	HAMPTON RD	DENNISON	SINGLETON	DE	DE	39570	DE	DE	38010	-1560
19250000	HAMPTON RD	CANADA DR	BICKERS ST	DE	DE	36551	ABC	ABC	35037	-1514
19252055	HAMPTON RD NB	IH30 ONRAMP WB	COMMERCE	F		20945	F		20433	-512
19252006	HAMPTON RD SB	COMMERCE	IH30 FRTG WB	F		22339	F		21782	-557
16130007	HATCHER ST	SPRING AVE	LAGOW	ABC	ABC	8429	ABC	ABC	9998	1569
16270001	HATCHER ST	2ND AVE	MALCOLM X	ABC	ABC	13828	ABC	ABC	17480	3652
16270704	HATCHER ST	CROZIER ST	US75 RAMP NB	ABC	ABC	15633	ABC	ABC	19332	3699
16271504	HATCHER ST	US75 RAMP SB	LAMAR ST	ABC	ABC	11879	ABC	ABC	1809	-10070
16271009	HATCHER ST	US75 RAMP NB	US75 RAMP SB	ABC	ABC	19067	ABC	ABC	11009	-8058
16270506	HATCHER ST	BEXAR ST	CROZIER ST	ABC	ABC	12717	ABC	ABC	16129	3412
16270019	HATCHER ST	MALCOLM X BLVD	BEXAR ST	ABC	ABC	18300	ABC	ABC	19364	1064
16131005	HATCHER ST	SCYENE RD	2ND AVE	ABC	ABC	14619	ABC	ABC	18000	3381
16130502	HATCHER ST	LAGOW	SCYENE RD	ABC	ABC	13010	ABC	ABC	14726	1716
16121501	HATCHER ST	HASKELL AVE	SPRING	ABC	ABC	12882	ABC	ABC	14002	1120
14410020	HOUSTON	MARSALIS	ZANG			0	ABC	ABC	13374	13374
25522750	HOUSTON ST VIADUCT	HOUSTON ST	HOUSTON ST			0	ABC	ABC	7759	7759
25524000	HOUSTON ST VIADUCT	TRINITY OFFRAMP	TERRACE	F		9994	F	F	7759	-2235
25522509	HOUSTON ST VIADUCT	YOUNG ST	IH30 HOV RAMP			0	F	F	7759	7759
18800100	INDUSTRIAL BLVD NB	TRINITY ONRAMP N	REUNION BLVD	F		22186	DE		17781	-4405
18800100	INDUSTRIAL BLVD NB	TRINITY ACCESS R	TRINITY OFFRAMP	F		22186	ABC		9400	-12786
18800100	INDUSTRIAL BLVD NB	REUNION BLVD	CONTINENTAL BLVD	F		22186	ABC		13941	-8245
18800100	INDUSTRIAL BLVD NB	CORINTH ST	TRINITY ONRAMP N	F		22186	ABC		12496	-9690

Difference in Traffic Volume - Trinity Parkway Alternatives 2A & 2B

Link ID	Street Name	Street From (Street A)	Street To (Street B)	2030 No Build			2030 Build			Difference Daily Volume
				LOS Street A to B	LOS Street B to A	Daily Volume	LOS Street A to B	LOS Street B to A	Daily Volume	
18800100	INDUSTRIAL BLVD NB	TRINITY PKWY NB	MARKET CENTER BL	F		22186	F		18234	-3952
18800100	INDUSTRIAL BLVD NB	MARKET ST	TRINITY ONRAMP N	F		22186	F		19758	-2428
18800100	INDUSTRIAL BLVD NB	TRINITY OFFRAMP	JEFFERSON BLVD	F		22186	DE		15604	-6582
18800100	INDUSTRIAL BLVD NB	JEFFERSON BLVD	MARKET ST	F		22186	F		19758	-2428
18800100	INDUSTRIAL BLVD NB	REUNION BLVD	CONTINENTAL BLVD	F		22186	ABC		15815	-6371
18800100	INDUSTRIAL BLVD NB	REUNION BLVD	CONTINENTAL BLVD	F		22186	ABC		9370	-12816
18800100	INDUSTRIAL BLVD NB	REUNION BLVD	CONTINENTAL BLVD	F		22186	F		17242	-4944
18800100	INDUSTRIAL BLVD NB	TRINITY ONRAMP N	TRINITY ACCESS R	F		22186	ABC		6486	-15700
18800100	INDUSTRIAL BLVD SB	OAK LAWN AVE	TRINITY PKWY SB	F		22186	ABC		15152	-7034
18800100	INDUSTRIAL BLVD SB	OAK LAWN AVE	TRINITY PKWY SB	F		22186	ABC		12385	-9801
18800100	INDUSTRIAL BLVD SB	OAK LAWN AVE	TRINITY PKWY SB	F		22186	DE		16016	-6170
18800100	INDUSTRIAL BLVD SB	JEFFERSON BLVD	TRINITY OFFRAMP	F		22186	ABC		14992	-7194
18800100	INDUSTRIAL BLVD SB	TRINITY OFFRAMP	JEFFERSON BLVD	F		22186	F		23269	1083
18800100	INDUSTRIAL BLVD SB	IH30 FRTG WB	IH30 FRTG EB	F		22186	ABC		11699	-10487
18800100	INDUSTRIAL BLVD SB	TRINITY ONRAMP N	TRINITY OFFRAMP	F		22186	ABC		7728	-14458
18800100	INDUSTRIAL BLVD SB	IH30 FRTG EB	TRINITY OFFRAMP	F		22186	DE		18393	-3793
18800100	INDUSTRIAL BLVD SB	OAK LAWN AVE	TRINITY PKWY SB	F		22186	ABC		12152	-10034
18800100	INDUSTRIAL BLVD SB	TRINITY OFFRAMP	CORINTH ST	F		22186	DE		15216	-6970
18800100	INDUSTRIAL BLVD SB	OAK LAWN AVE	TRINITY PKWY SB	F		22186	F		17146	-5040
18800100	INDUSTRIAL BLVD SB	OAK LAWN AVE	TRINITY PKWY SB	F		22186	F		17045	-5141
19243470	INWOOD BLVD	HARRY HINES OFFR	NEAR IH35E ONRAM	F	F	46355	F	F	48285	1930
19244100	INWOOD RD	IRVING BLVD SB	CANADA DR	F	F	47023	F	F	50113	3090
19243500	INWOOD RD	IRVING BLVD	CONVEYOR	F	F	47023	F	F	67964	20941
19244003	INWOOD RD	IRVING BLVD NB	IRVING BLVD SB	F	F	47023	F	F	55032	8009
19242502	INWOOD RD	IH35E FRTG WB	IH35E FRTG EB	F	F	95998	F	F	90039	-5959
22529002	IRVING BLVD	COMMONWEALTH	IRVING BLVD	F	DE	43791	ABC	ABC	34152	-9639
18800100	IRVING BLVD NB	OAK LAWN AVE	TURTLE CREEK BLV	F		22186	ABC		7719	-14467
18800100	IRVING BLVD NB	MARKET CENTER BL	MARKET CENTER BL	F		22186	DE		16237	-5949
18800100	IRVING BLVD NB	MARKET CENTER BL	OAK LAWN AVE	F		22186	DE		16241	-5945
18800100	IRVING BLVD NB			F		22186	F		17284	-4902
18800100	IRVING BLVD NB	TRINITY OFFRAMP	SYLVAN AVE	F		22186	ABC		16787	-5399
18800100	IRVING BLVD NB	SYLVAN AVE	TRINITY ONRAMP N	F		22186	F		17906	-4280
18800100	IRVING BLVD NB	TURTLE CREEK BLV	TRINITY OFFRAMP	F		22186	ABC		10642	-11544
18800100	IRVING BLVD NB	MOTOR ST	TRINITY OFFRAMP	F		22186	ABC		16188	-5998
18800100	IRVING BLVD NB	INWOOD RD	TRINITY ONRAMP N	F		22186	F		24281	2095
18800100	IRVING BLVD NB	TRINITY ONRAMP N	IRVING BLVD	F		22186	ABC		13400	-8786
18800100	IRVING BLVD NB	TRINITY OFFRAMP	INWOOD RD	F		22186	DE		16845	-5341
18800100	IRVING BLVD SB	SYLVAN AVE	TRINITY ONRAMP S	F		22186	ABC		15471	-6715
18800100	IRVING BLVD SB	IRVING BLVD	TRINITY OFFRAMP	F		22186	ABC		12716	-9470
18800100	IRVING BLVD SB	TRINITY OFFRAMP	SYLVAN AVE	F		22186	F		18579	-3607
18800100	IRVING BLVD SB	TRINITY ONRAMP S	TURTLE CREEK BLV	F		22186	ABC		9656	-12530
18800100	IRVING BLVD SB	MOTOR ST	TRINITY OFFRAMP	F		22186	DE		17910	-4276
18800100	IRVING BLVD SB	INWOOD RD	TRINITY ONRAMP S	F		22186	F		18376	-3810
18800100	IRVING BLVD SB	TRINITY OFFRAMP	INWOOD RD	F		22186	F		24280	2094

Difference in Traffic Volume - Trinity Parkway Alternatives 2A & 2B

Link ID	Street Name	Street From (Street A)	Street To (Street B)	2030 No Build			2030 Build			Difference Daily Volume
				LOS Street A to B	LOS Street B to A	Daily Volume	LOS Street A to B	LOS Street B to A	Daily Volume	
13485503	JEFFERSON BLVD	8TH ST	FLEMING PL	ABC	ABC	9847	ABC	DE	12384	2537
13484506	JEFFERSON BLVD	MARSALIS AVE	EWING	ABC	ABC	3804	ABC	ABC	5993	2189
13484019	JEFFERSON BLVD	CRAWFORD	MARSALIS	ABC	ABC	2095	ABC	ABC	2503	408
13483508	JEFFERSON BLVD	ZANG BLVD	BECKLEY AVE	ABC	ABC	2908	ABC	ABC	2718	-190
13484001	JEFFERSON BLVD	BECKLEY AVE	CRAWFORD	ABC	ABC	2280	ABC	ABC	2175	-105
13485008	JEFFERSON BLVD	EWING AVE	8TH ST	ABC	ABC	10274	ABC	ABC	12645	2371
13486006	JEFFERSON BLVD	FLEMING PL	COMAL ST	ABC	ABC	2786	ABC	ABC	6358	3572
13486303	JEFFERSON BLVD	COMAL ST	COLORADO BLVD	ABC	ABC	2786	ABC	ABC	6358	3572
25871000	JEFFERSON BLVD	ZANG PLACE	TRINITY ONRAMP			0	F	F	46302	46302
25878745	JEFFERSON BLVD	ZANG PLACE	TRINITY ONRAMP			0	F	F	46302	46302
25871000	JEFFERSON BLVD	INDUSTRIAL BLVD	INDUSTRIAL BLVD			0	F	F	39230	39230
18164509	LAMAR ST	CADIZ ST	CORINTH	ABC	DE	18884	ABC	ABC	13932	-4952
14683007	LAMAR ST	PINE ST	HATCHER ST	DE	F	16222	DE	F	15322	-900
14680508	LAMAR ST	FOREST AVE	PENNSYLVANIA	ABC	F	12671	ABC	DE	12343	-328
14682504	LAMAR ST	IH45 RAMP NB	PINE ST	F	F	17756	DE	F	15866	-1890
18165001	LAMAR ST	CORINTH ST	SANTA FE BYPASS	ABC	F	19689	ABC	ABC	16789	-2900
14680003	LAMAR ST	GRAND AVE	FOREST AVE	ABC	F	14252	ABC	DE	14017	-235
18165200	LAMAR ST	SANTA FE BYPASS	CORINTH ST	ABC	F	19689	ABC	ABC	16789	-2900
18165100	LAMAR ST	SANTA FE BYPASS	SANTA FE BYPASS	ABC	F	19689	ABC	ABC	16789	-2900
14681506	LAMAR ST	METROPOLITAN AVE	IH45 RAMP SB	ABC	DE	10708	ABC	DE	13384	2676
14681001	LAMAR ST	PENNSYLVANIA	COOPER ST	ABC	F	12352	ABC	DE	12320	-32
14681100	LAMAR ST	COOPER ST	METROPOLITAN	ABC	F	12608	ABC	DE	12791	183
14682009	LAMAR ST	IH45 RAMP SB	IH45 RAMP NB	DE	DE	15409	DE	DE	17840	2431
14683600	LAMAR ST	TRINITY ONRAMP E	LAMAR CONNECTOR	ABC	ABC	7526	ABC	ABC	3401	-4125
14683650	LAMAR ST	LAMAR CONNECTOR	IH45 RAMP NB	ABC	ABC	5432	ABC	ABC	3110	-2322
14683156	LAMAR ST	HATCHER	US175 EB	ABC	ABC	7526	ABC	DE	13659	6133
14683502	LAMAR ST	HATCHER ST	TRINITY ONRAMP E	ABC	ABC	7526	F	ABC	12847	5321
18241000	MALCOLM X BLVD	MLK BLVD	PENNSYLVANIA	ABC	DE	5730	ABC	ABC	5717	-13
18242008	MALCOLM X BLVD	WARREN AVE	METROPOLITAN	ABC	ABC	3843	ABC	ABC	3371	-472
18241505	MALCOLM X BLVD	PENNSYLVANIA	WARREN AVE	ABC	ABC	3843	ABC	ABC	3371	-472
16281008	MALCOLM X BLVD	HATCHER ST	SP RR	ABC	ABC	345	ABC	ABC	356	11
16280000	MALCOLM X BLVD	METROPOLITAN AVE	PINE ST	ABC	ABC	4215	ABC	ABC	7357	3142
16280505	MALCOLM X BLVD	PINE ST	HATCHER ST	ABC	ABC	2682	ABC	ABC	4939	2257
18242503	MALCOLM X BLVD	METROPOLITAN AVE	METROPOLITAN	ABC	DE	6689	ABC	ABC	5412	-1277
18240002	MALCOLM X BLVD	WALL ST	GRAND AVE	DE	F	9596	ABC	DE	6964	-2632
18240200	MALCOLM X BLVD	OAKLAND RAMP	OAKLAND RAMP	ABC	DE	8466	ABC	DE	5756	-2710
18240507	MALCOLM X BLVD	GRAND AVE	MLK BLVD	ABC	F	6662	ABC	DE	5704	-958
18330506	MARTIN L KING BLVD	MALCOLM X BLVD	LATIMER ST	ABC	ABC	12928	ABC	ABC	12860	-68
18333500	MARTIN L KING BLVD	FOREST AVE	TRINITY ONRAMP N	ABC	ABC	18696	ABC	ABC	15288	-3408
18333700	MARTIN L KING BLVD	TRINITY OFFRAMP	PONTIAC	ABC	ABC	18696	DE	DE	20764	2068
18333005	MARTIN L KING BLVD	ERVAY ST	FOREST AVE	ABC	ABC	19812	ABC	ABC	17388	-2424
18330704	MARTIN L KING BLVD	LATIMER ST	US75 RAMP NB	DE	ABC	16841	DE	ABC	16496	-345
18332007	MARTIN L KING BLVD	HARWOOD ST	COLONEL DR	F	DE	23385	F	ABC	21755	-1630
18331504	MARTIN L KING BLVD	US75 RAMP SB	HARWOOD ST	F	F	24369	DE	ABC	22845	-1524

Difference in Traffic Volume - Trinity Parkway Alternatives 2A & 2B

Link ID	Street Name	Street From (Street A)	Street To (Street B)	2030 No Build			2030 Build			Difference Daily Volume
				LOS Street A to B	LOS Street B to A	Daily Volume	LOS Street A to B	LOS Street B to A	Daily Volume	
18332502	MARTIN L KING BLVD	COLONIAL AVE	ERVAY ST	ABC	ABC	18855	ABC	ABC	16853	-2002
18331009	MARTIN L KING BLVD	US75 FRTG NB	US75 RAMP SB	DE	DE	20489	ABC	F	18987	-1502
18333500	MARTIN L KING BLVD	TRINITY OFFRAMP	TRINITY ONRAMP S	ABC	ABC	18696	ABC	ABC	17418	-1278
18330001	MARTIN L KING BLVD	TRUNK	MALCOLM X BLVD	ABC	ABC	7316	ABC	ABC	5854	-1462
18330005	MARTIN L KING BLVD	SH352 RBC	TRUNK	ABC	ABC	7038	ABC	ABC	5625	-1413
37690302	MEMORIAL DR	HOTEL ST	LAMAR ST	ABC	ABC	17066	F	DE	29460	12394
25870398	MEMORIAL DR EXTN	ZANG PLACE	TRINITY ONRAMP			0	F	F	29719	29719
18207016	MLK ACCESS	GRAND	IH45 SB OFFRAMP	ABC		3127	ABC		1789	-1338
22528509	SH356	MOCKINGBIRD	COMMONWEALTH DR	DE	F	45055	DE	DE	37258	-7797
19120005	SINGLETON BLVD	KINGSBRIDGE	HAMPTON RD	ABC	ABC	16209	ABC	ABC	11232	-4977
22503502	SINGLETON BLVD	WESTMORELAND	KINGSBRIGE	ABC	ABC	16857	ABC	ABC	11876	-4981
19121508	SINGLETON BLVD	SYLVAN AVE	CANADA RAMP	DE	ABC	22287	ABC	ABC	19566	-2721
19121003	SINGLETON BLVD	VILBIG	SYLVAN AVE	ABC	ABC	13026	ABC	ABC	9678	-3348
19120500	SINGLETON BLVD	HAMPTON RD	VILBIG	ABC	ABC	14203	ABC	ABC	10019	-4184
19122001	SINGLETON BLVD	CANADA RAMP	CONTINENTAL AVE	DE	DE	23960	ABC	DE	22125	-1835
19122050	SINGLETON BLVD	BECKLEY RAMP	BECKLEY RAMP	DE	DE	23960	ABC	DE	22125	-1835
19292507	SYLVAN AVE	FORTH WORTH AVE	IH30 RAMP WB	DE	F	31700	DE	DE	30506	-1194
19294008	SYLVAN AVE	KESSLER PARK	COLORADO ST	ABC	F	24558	ABC	F	24980	422
19293505	SYLVAN AVE	IH30 FRTG EB	KESSLER PARK	DE	F	32296	F	F	32737	441
19293000	SYLVAN AVE	IH30 RAMP WB	IH30 FRTG EB	F	ABC	32262	F	ABC	31512	-750
19290700	SYLVAN AVE	TRINITY RAMPS	MCBROOM	ABC	DE	18345	ABC	DE	18899	554
19291509	SYLVAN AVE	SINGLETON	COMMERCE	DE	DE	26534	DE	DE	27347	813
19292002	SYLVAN AVE	COMMERCE ST	FORT WORTH AVE	DE	DE	26132	DE	DE	26447	315
19291004	SYLVAN AVE	MCBROOM	SINGLETON	ABC	ABC	18578	ABC	DE	19341	763
19290006	SYLVAN AVE	WYCLIFF AVE	IRVING BLVD NB	ABC	DE	18345	ABC	ABC	7948	-10397
19290500	SYLVAN AVE	TRINITY RAMPS	TRINITY RAMPS	ABC	DE	18345	ABC	ABC	13626	-4719
43296021	TERRACE SB/IH35E S	TERRACE SB	IH35E FRTG SB			0	ABC		2886	2886
43292587	TERRACE SB/IH35E S	TERRACE SB	IH35E FRTG SB	ABC		0	F		17468	17468
43296589	TERRACE SB/IH35E S	TERRACE SB	IH35E FRTG SB			0	DE		21045	21045
19280502	WYCLIFF AVE	IH35E FRTG SB	IH35E HOV RAMP	ABC	ABC	4430	ABC	ABC	7948	3518
14411003	ZANG BLVD	BECKLEY AVE	DAVIS SH180	ABC	DE	28443	ABC	DE	23914	-4529
14413009	ZANG BLVD	10TH ST	JEFFERSON BLVD	ABC	DE	29716	ABC	DE	24809	-4907
14412001	ZANG BLVD	7TH ST	9TH ST	DE	DE	30138	ABC	DE	25412	-4726
14412506	ZANG BLVD	9TH ST	10TH ST	DE	DE	29712	ABC	DE	24843	-4869
14411508	ZANG BLVD	DAVIS RD US80	7TH ST	DE	DE	29544	ABC	DE	24730	-4814
14410500	ZANG BLVD	COLORADO ST	BECKLEY AVE	ABC	ABC	19742	ABC	ABC	11986	-7756
14410677	ZANG BLVD	HOUSTON	COLORADO			0	ABC	ABC	10850	10850
14413695	ZANG BLVD	TERRACE	MARSALIS			0	ABC	ABC	13507	13507

Difference in Traffic Volume - Trinity Parkway Alternatives 3A, 3B & 3C

Link ID	Street Name	Street From (Street A)	Street To (Street B)	2030 No Build			2030 Build			Difference Daily Volume
				LOS Street A to B	LOS Street B to A	Daily Volume	LOS Street A to B	LOS Street B to A	Daily Volume	
22451009	CANADA DR	HOLYSTONE	HAMPTON RD	DE	DE	18240	ABC	ABC	27233	8993
22450506	CANADA DR	MOCKINGBIRD W	RUPERT	ABC	ABC	17594	ABC	ABC	26329	8735
22450525	CANADA DR	RUPERT MOCKINGBI	HOLYSTONE	ABC	ABC	17594	ABC	ABC	26329	8735
19080704	CANADA DR	BORGER ST	SINGLETON CONTIN	ABC	ABC	16402	ABC	ABC	20670	4268
19080506	CANADA DR	VILBIG	BORGER	ABC	DE	15873	ABC	ABC	20261	4388
19080001	CANADA DR	HAMPTON RD	VILBIG	DE	DE	16500	ABC	ABC	23149	6649
19081009	CANADA DR	SINGLETON RAMP	SINGLETON RAMP	ABC	ABC	12783	ABC	ABC	22480	9697
15481500	CEDAR CREST BLVD	PONTIAC	MORRELL	ABC	ABC	15504	ABC	ABC	16544	1040
15482003	CEDAR CREST BLVD	MORRELL	KIEST BLVD	ABC	ABC	15686	ABC	ABC	16323	637
14500003	CORINTH	INDUSTRIAL	TRINITY ONRAMP N	F	F	27844	ABC	DE	21974	-5870
14500005	CORINTH	TRINITY ONRAMP N	TRINITY OFFRAMP	F	F	27844	ABC	F	27954	110
18191007	CORINTH ST	ERVAY ST	AKARD ST	ABC	ABC	20986	ABC	ABC	13724	-7262
14501308	CORINTH ST	11TH ST	MORELL AVE	ABC	ABC	21149	ABC	ABC	23472	2323
14501001	CORINTH ST	CLARENDON DR	11TH ST	ABC	DE	25067	ABC	DE	27623	2556
14500508	CORINTH ST	8TH ST	CLARENDON DR	DE	F	29594	DE	F	32308	2714
18191502	CORINTH ST	AKARD ST	LAMAR ST	F	DE	24669	F	ABC	19568	-5101
18192005	CORINTH ST	LAMAR ST	INDUSTRIAL	DE	F	26048	ABC	DE	18272	-7776
18190504	CORINTH ST	HARWOOD ST	ERVAY ST	ABC	ABC	21210	ABC	ABC	12903	-8307
18190009	CORINTH ST	CENTRAL EXPWY	HARWOOD ST	F	F	41712	DE	ABC	20686	-21026
14500007	CORINTH ST VIADUCT	TRINITY ONRAMP N	8TH ST	DE	DE	27844	F	DE	33718	5874
16121006	DOLPHIN RD	IH30 RAMP EB	HASKELL AVE	ABC	ABC	16769	ABC	ABC	17258	489
19250505	HAMPTON RD	BICKERS ST	DENNISON	ABC	ABC	35100	ABC	DE	36607	1507
19251503	HAMPTON RD	SINGLETON	COMMERCE	F	F	43631	F	F	43474	-157
19251008	HAMPTON RD	DENNISON	SINGLETON	DE	DE	39570	DE	DE	40107	537
19250000	HAMPTON RD	CANADA DR	BICKERS ST	DE	DE	36551	DE	DE	37812	1261
19252055	HAMPTON RD NB	IH30 ONRAMP WB	COMMERCE	F		20945	F		21282	337
19252006	HAMPTON RD SB	COMMERCE	IH30 FRTG WB	F		22339	F		22666	327
16130007	HATCHER ST	SPRING AVE	LAGOW	ABC	ABC	8429	ABC	ABC	9758	1329
16270001	HATCHER ST	2ND AVE	MALCOLM X	ABC	ABC	13828	ABC	ABC	17793	3965
16270704	HATCHER ST	CROZIER ST	US75 RAMP NB	ABC	ABC	15633	ABC	ABC	20439	4806
16271504	HATCHER ST	US75 RAMP SB	LAMAR ST	ABC	ABC	11879	ABC	ABC	1979	-9900
16271009	HATCHER ST	US75 RAMP NB	US75 RAMP SB	ABC	ABC	19067	ABC	ABC	11980	-7087
16270506	HATCHER ST	BEXAR ST	CROZIER ST	ABC	ABC	12717	ABC	ABC	17350	4633
16270019	HATCHER ST	MALCOLM X BLVD	BEXAR ST	ABC	ABC	18300	ABC	ABC	20278	1978
16131005	HATCHER ST	SCYENE RD	2ND AVE	ABC	ABC	14619	ABC	ABC	18273	3654
16130502	HATCHER ST	LAGOW	SCYENE RD	ABC	ABC	13010	ABC	ABC	14470	1460
16121501	HATCHER ST	HASKELL AVE	SPRING	ABC	ABC	12882	ABC	ABC	13734	852
14410020	HOUSTON	MARSALIS	ZANG			0	ABC	ABC	10918	10918
25522750	HOUSTON ST VIADUCT	IH30 HOV RAMP	TRINITY ONRAMP			0	ABC	ABC	4914	4914
25524000	HOUSTON ST VIADUCT	TRINITY OFFRAMP	TERRACE	F		9994	DE	F	4914	-5080
25523000	HOUSTON ST VIADUCT	TRINITY ONRAMP	TRINITY OFFRAMP	ABC		11442	ABC	ABC	4914	-6528
25522509	HOUSTON ST VIADUCT	YOUNG ST	IH30 HOV RAMP			0	F	F	4914	4914
18180550	INDUSTRIAL BLVD	IH35E RAMP SB	INDUSTRIAL RAMP	ABC	ABC	21726	ABC	F	28132	6406
18181008	INDUSTRIAL BLVD	CADIZ ST	CORINTH	ABC	ABC	26184	ABC	ABC	32923	6739

Difference in Traffic Volume - Trinity Parkway Alternatives 3A, 3B & 3C

Link ID	Street Name	Street From (Street A)	Street To (Street B)	2030 No Build			2030 Build			Difference Daily Volume
				LOS Street A to B	LOS Street B to A	Daily Volume	LOS Street A to B	LOS Street B to A	Daily Volume	
18180755	INDUSTRIAL BLVD	INDUSTRIAL RAMP	CADIZ	ABC	ABC	21726	ABC	F	28132	6406
19313501	INDUSTRIAL BLVD	REUNION BLVD	IH30 RAMP WB	ABC	ABC	26980	ABC	ABC	21269	-5711
19312008	INDUSTRIAL BLVD	IRVING BLVD	CONTINENTAL	F	F	38665	DE	DE	27322	-11343
19313006	INDUSTRIAL BLVD	COMMERCE ST	REUNION BLVD	ABC	ABC	21867	ABC	ABC	18968	-2899
19312800	INDUSTRIAL BLVD	SP366 RAMP	COMMERCE	DE	DE	18926	DE	DE	27333	8407
19312701	INDUSTRIAL BLVD	CONTINENTAL AVE	WOODALL RODGERS	DE	DE	18926	ABC	ABC	20686	1760
19312775	INDUSTRIAL BLVD	WOODALL RODGERS	COMMERCE	DE	DE	18926	DE	DE	27333	8407
19312725	INDUSTRIAL BLVD	WOODALL RODGERS	WOODALL RODGERS	DE	DE	18926	F	ABC	26117	7191
18180505	INDUSTRIAL BLVD	IH35E RAMP SB	INDUSTRIAL RAMP	ABC	ABC	21726	ABC	ABC	23942	2216
19314509	INDUSTRIAL BLVD	IH30 RAMP EB	IH35E RAMP SB	ABC	ABC	28685	ABC	ABC	31165	2480
19314004	INDUSTRIAL BLVD	IH30 FRTG WB	IH30 FRTG EB	ABC	ABC	27361	ABC	DE	28410	1049
19243470	INWOOD BLVD	HARRY HINES OFFR	NEAR IH35E ONRAM	F	F	46355	F	F	48291	1936
19244100	INWOOD RD	TRINITY ONRAMP E	CANADA DR	F	F	47023	F	F	58176	11153
19243500	INWOOD RD	IRVING BLVD	CONVEYOR	F	F	47023	F	F	38982	-8041
19244003	INWOOD RD	TRINITY ONRAMP W	TRINITY ONRAMP E	F	F	47023	F	F	48164	1141
19243005	INWOOD RD	IH35E FRTG EB	IRVING BLVD	F	F	86350	F	F	76239	-10111
19242502	INWOOD RD	IH35E FRTG WB	IH35E FRTG EB	F	F	95998	F	F	94025	-1973
22529507	IRVING BLVD	LAKAWANA	INWOOD RD	DE	DE	35974	ABC	ABC	26715	-9259
19070507	IRVING BLVD	MOTOR ST	WYCLIFF	F	F	32025	DE	DE	29259	-2766
19071000	IRVING BLVD	WYCLIFF	TURTLE CREEK BLV	ABC	ABC	23799	ABC	ABC	14156	-9643
19070002	IRVING BLVD	INWOOD RD	MOTOR ST	F	DE	37207	DE	ABC	30291	-6916
19071307	IRVING BLVD	TURTLE CREEK BLV	OAK LAWN	ABC	ABC	17126	ABC	ABC	7984	-9142
19071505	IRVING BLVD	OAK LAWN	INDUSTRIAL	ABC	DE	30516	ABC	ABC	23056	-7460
13485503	JEFFERSON BLVD	8TH ST	FLEMING PL	ABC	ABC	9847	ABC	DE	12932	3085
13484506	JEFFERSON BLVD	MARSALIS AVE	EWING	ABC	ABC	3804	ABC	ABC	6593	2789
13484019	JEFFERSON BLVD	CRAWFORD	MARSALIS	ABC	ABC	2095	ABC	ABC	2685	590
13483508	JEFFERSON BLVD	ZANG BLVD	BECKLEY AVE	ABC	ABC	2908	ABC	ABC	2684	-224
13484001	JEFFERSON BLVD	BECKLEY AVE	CRAWFORD	ABC	ABC	2280	ABC	ABC	2214	-66
13485008	JEFFERSON BLVD	EWING AVE	8TH ST	ABC	ABC	10274	ABC	ABC	13496	3222
13486006	JEFFERSON BLVD	FLEMING PL	COMAL ST	ABC	ABC	2786	ABC	ABC	7149	4363
13486303	JEFFERSON BLVD	COMAL ST	COLORADO BLVD	ABC	ABC	2786	ABC	ABC	7149	4363
25878745	JEFFERSON BLVD	ZANG PLACE	TRINITY ONRAMP			0	F	DE	38902	38902
25871000	JEFFERSON BLVD	ZANG PLACE	TRINITY ONRAMP			0	F	F	33037	33037
18164509	LAMAR ST	CADIZ ST	CORINTH	ABC	DE	18884	ABC	ABC	13555	-5329
14683007	LAMAR ST	PINE ST	HATCHER ST	DE	F	16222	ABC	ABC	7902	-8320
14680508	LAMAR ST	FOREST AVE	PENNSYLVANIA	ABC	F	12671	ABC	DE	9795	-2876
14682504	LAMAR ST	IH45 RAMP NB	PINE ST	F	F	17756	ABC	DE	8308	-9448
18165001	LAMAR ST	CORINTH ST	SANTA FE BYPASS	ABC	F	19689	ABC	ABC	13991	-5698
14680003	LAMAR ST	GRAND AVE	FOREST AVE	ABC	F	14252	ABC	DE	11467	-2785
18165200	LAMAR ST	SANTA FE BYPASS	CORINTH ST	ABC	F	19689	ABC	ABC	13991	-5698
18165100	LAMAR ST	SANTA FE BYPASS	SANTA FE BYPASS	ABC	F	19689	ABC	ABC	13991	-5698
14681506	LAMAR ST	METROPOLITAN AVE	IH45 RAMP SB	ABC	DE	10708	ABC	DE	10289	-419
14681001	LAMAR ST	PENNSYLVANIA	COOPER ST	ABC	F	12352	ABC	DE	9776	-2576
14681100	LAMAR ST	COOPER ST	METROPOLITAN	ABC	F	12608	ABC	DE	10186	-2422

Difference in Traffic Volume - Trinity Parkway Alternatives 3A, 3B & 3C

Link ID	Street Name	Street From (Street A)	Street To (Street B)	2030 No Build			2030 Build			Difference Daily Volume
				LOS Street A to B	LOS Street B to A	Daily Volume	LOS Street A to B	LOS Street B to A	Daily Volume	
14682009	LAMAR ST	IH45 RAMP SB	IH45 RAMP NB	DE	DE	15409	ABC	DE	10503	-4906
14683600	LAMAR ST	TRINITY ONRAMP E	LAMAR CONNECTOR	ABC	ABC	7526	ABC	ABC	5843	-1683
14683650	LAMAR ST	LAMAR CONNECTOR	IH45 RAMP NB	ABC	ABC	5432	ABC	ABC	3513	-1919
14683156	LAMAR ST	HATCHER	US175 EB	ABC	ABC	7526	ABC	ABC	7428	-98
14683502	LAMAR ST	HATCHER ST	TRINITY ONRAMP E	ABC	ABC	7526	ABC	ABC	8987	1461
18241000	MALCOLM X BLVD	MLK BLVD	PENNSYLVANIA	ABC	DE	5730	ABC	ABC	5383	-347
18242008	MALCOLM X BLVD	WARREN AVE	METROPOLITAN	ABC	ABC	3843	ABC	ABC	2904	-939
18241505	MALCOLM X BLVD	PENNSYLVANIA	WARREN AVE	ABC	ABC	3843	ABC	ABC	2904	-939
16281008	MALCOLM X BLVD	HATCHER ST	SP RR	ABC	ABC	345	ABC	ABC	362	17
16280000	MALCOLM X BLVD	METROPOLITAN AVE	PINE ST	ABC	ABC	4215	ABC	ABC	6738	2523
16280505	MALCOLM X BLVD	PINE ST	HATCHER ST	ABC	ABC	2682	ABC	ABC	4364	1682
18242503	MALCOLM X BLVD	METROPOLITAN AVE	METROPOLITAN	ABC	DE	6689	ABC	ABC	5626	-1063
18240002	MALCOLM X BLVD	WALL ST	GRAND AVE	DE	F	9596	ABC	DE	6648	-2948
18240200	MALCOLM X BLVD	OAKLAND RAMP	OAKLAND RAMP	ABC	DE	8466	ABC	DE	5448	-3018
18240507	MALCOLM X BLVD	GRAND AVE	MLK BLVD	ABC	F	6662	ABC	DE	5576	-1086
18330506	MARTIN L KING BLVD	MALCOLM X BLVD	LATIMER ST	ABC	ABC	12928	ABC	ABC	12438	-490
18333500	MARTIN L KING BLVD	FOREST AVE	TRINITY ONRAMP N	ABC	ABC	18696	ABC	ABC	15592	-3104
18333700	MARTIN L KING BLVD	TRINITY OFFRAMP	PONTIAC	ABC	ABC	18696	DE	DE	20466	1770
18333600	MARTIN L KING BLVD	TRINITY ONRAMP N	TRINITY OFFRAMP	ABC	ABC	18696	DE	ABC	18039	-657
18333005	MARTIN L KING BLVD	ERVAY ST	FOREST AVE	ABC	ABC	19812	ABC	ABC	17486	-2326
18330704	MARTIN L KING BLVD	LATIMER ST	US75 RAMP NB	DE	ABC	16841	ABC	ABC	16010	-831
18332007	MARTIN L KING BLVD	HARWOOD ST	COLONEL DR	F	DE	23385	F	ABC	21967	-1418
18331504	MARTIN L KING BLVD	US75 RAMP SB	HARWOOD ST	F	F	24369	DE	ABC	22990	-1379
18332502	MARTIN L KING BLVD	COLONIAL AVE	ERVAY ST	ABC	ABC	18855	ABC	ABC	16974	-1881
18331009	MARTIN L KING BLVD	US75 FRTG NB	US75 RAMP SB	DE	DE	20489	ABC	F	18712	-1777
18330001	MARTIN L KING BLVD	TRUNK	MALCOLM X BLVD	ABC	ABC	7316	ABC	ABC	5670	-1646
18330005	MARTIN L KING BLVD	SH352 RBC	TRUNK	ABC	ABC	7038	ABC	ABC	5440	-1598
37690302	MEMORIAL DR	HOTEL ST	LAMAR ST	ABC	ABC	17066	F	F	33506	16440
25870398	MEMORIAL DR EXTN	ZANG PLACE	TRINITY ONRAMP			0	F	F	33037	33037
18207016	MLK ACCESS	GRAND	IH45 SB OFFRAMP	ABC		3127	ABC		1646	-1481
22528509	SH356	MOCKINGBIRD	COMMONWEALTH DR	DE	F	45055	ABC	DE	32532	-12523
22529002	SH356	COMMONWEALTH DR	LAKAWANA	F	DE	43791	DE	ABC	35082	-8709
19120005	SINGLETON BLVD	KINGSBRIDGE	HAMPTON RD	ABC	ABC	16209	ABC	ABC	10705	-5504
22503502	SINGLETON BLVD	WESTMORELAND	KINGSBRIGE	ABC	ABC	16857	ABC	ABC	11334	-5523
19121508	SINGLETON BLVD	SYLVAN AVE	CANADA RAMP	DE	ABC	22287	ABC	ABC	19191	-3096
19121003	SINGLETON BLVD	VILBIG	SYLVAN AVE	ABC	ABC	13026	ABC	ABC	9007	-4019
19120500	SINGLETON BLVD	HAMPTON RD	VILBIG	ABC	ABC	14203	ABC	ABC	9470	-4733
19122001	SINGLETON BLVD	CANADA RAMP	CONTINENTAL AVE	DE	DE	23960	ABC	ABC	21693	-2267
19122050	SINGLETON BLVD	BECKLEY RAMP	BECKLEY RAMP	DE	DE	23960	ABC	ABC	21693	-2267
19292507	SYLVAN AVE	FORTH WORTH AVE	IH30 RAMP WB	DE	F	31700	DE	DE	29815	-1885
19294008	SYLVAN AVE	KESSLER PARK	COLORADO ST	ABC	F	24558	ABC	F	24173	-385
19293505	SYLVAN AVE	IH30 FRTG EB	KESSLER PARK	DE	F	32296	F	F	32136	-160
19293000	SYLVAN AVE	IH30 RAMP WB	IH30 FRTG EB	F	ABC	32262	F	ABC	31195	-1067
19290700	SYLVAN AVE	TRINITY RAMPS	MCBROOM	ABC	DE	18345	ABC	DE	16729	-1616

Difference in Traffic Volume - Trinity Parkway Alternatives 3A, 3B & 3C

Link ID	Street Name	Street From (Street A)	Street To (Street B)	2030 No Build			2030 Build			Difference Daily Volume
				LOS Street A to B	LOS Street B to A	Daily Volume	LOS Street A to B	LOS Street B to A	Daily Volume	
19291509	SYLVAN AVE	SINGLETON	COMMERCE	DE	DE	26534	DE	DE	25882	-652
19292002	SYLVAN AVE	COMMERCE ST	FORT WORTH AVE	DE	DE	26132	DE	DE	25252	-880
19291004	SYLVAN AVE	MCBROOM	SINGLETON	ABC	ABC	18578	ABC	ABC	17228	-1350
19290006	SYLVAN AVE	IRVING BLVD	TRINITY RAMPS	ABC	DE	18345	DE	F	26430	8085
19290500	SYLVAN AVE	TRINITY RAMPS	TRINITY RAMPS	ABC	DE	18345	DE	DE	19886	1541
43296021	TERRACE SB/IH35E S	TERRACE SB	IH35E FRTG SB			0	ABC		3264	3264
43296589	TERRACE SB/IH35E S	TERRACE SB	IH35E FRTG SB			0	DE		20737	20737
43292587	TERRACE SB/IH35E S	TERRACE SB	IH35E FRTG SB	ABC		0	F		17129	17129
19280502	WYCLIFF AVE	IH35E FRTG SB	IH35E HOV RAMP	ABC	ABC	4430	ABC	ABC	3695	-735
19280775	WYCLIFF AVE	IH35E HOV RAMP	IRVING BLVD	ABC	ABC	4430	ABC	ABC	3695	-735
14411003	ZANG BLVD	BECKLEY AVE	DAVIS SH180	ABC	DE	28443	ABC	DE	23225	-5218
14413009	ZANG BLVD	10TH ST	JEFFERSON BLVD	ABC	DE	29716	ABC	DE	23898	-5818
14412001	ZANG BLVD	7TH ST	9TH ST	DE	DE	30138	ABC	DE	24831	-5307
14412506	ZANG BLVD	9TH ST	10TH ST	DE	DE	29712	ABC	DE	23937	-5775
14411508	ZANG BLVD	DAVIS RD US80	7TH ST	DE	DE	29544	ABC	DE	24146	-5398
14410500	ZANG BLVD	COLORADO ST	BECKLEY AVE	ABC	ABC	19742	ABC	ABC	10828	-8914
14410677	ZANG BLVD	HOUSTON	COLORADO			0	ABC	ABC	8848	8848
14413695	ZANG BLVD	TERRACE	MARSALIS			0	ABC	ABC	11032	11032

Difference in Traffic Volume - Trinity Parkway Alternatives 4A, 4B & 5

Link ID	Street Name	Street From (Street A)	Street To (Street B)	2030 No Build			2030 Build			Difference Daily Volume
				LOS Street A to B	LOS Street B to A	Daily Volume	LOS Street A to B	LOS Street B to A	Daily Volume	
22451009	CANADA DR	HOLYSTONE	HAMPTON RD	DE	DE	18240	DE	DE	19950	1710
22450506	CANADA DR	MOCKINGBIRD W	RUPERT	ABC	ABC	17594	ABC	ABC	18471	877
22450525	CANADA DR	RUPERT MOCKINGBI	HOLYSTONE	ABC	ABC	17594	ABC	ABC	18471	877
19080704	CANADA DR	BORGER ST	SINGLETON CONTIN	ABC	ABC	16402	ABC	ABC	14380	-2022
19080506	CANADA DR	VILBIG	BORGER	ABC	DE	15873	ABC	ABC	13997	-1876
19080001	CANADA DR	HAMPTON RD	VILBIG	DE	DE	16500	DE	DE	16169	-331
19081009	CANADA DR	SINGLETON RAMP	SINGLETON RAMP	ABC	ABC	12783	ABC	ABC	15397	2614
15481500	CEDAR CREST BLVD	PONTIAC	MORRELL	ABC	ABC	15504	ABC	ABC	16837	1333
15482003	CEDAR CREST BLVD	MORRELL	KIEST BLVD	ABC	ABC	15686	ABC	ABC	16634	948
14500003	CORINTH	INDUSTRIAL	TRINITY ONRAMP N	F	F	27844	F	F	24553	-3291
14500005	CORINTH	TRINITY ONRAMP N	TRINITY OFFRAMP	F	F	27844	F	F	29107	1263
18191007	CORINTH ST	ERVAY ST	AKARD ST	ABC	ABC	20986	ABC	ABC	13944	-7042
14501308	CORINTH ST	11TH ST	MORELL AVE	ABC	ABC	21149	ABC	ABC	23427	2278
14501001	CORINTH ST	CLARENDON DR	11TH ST	ABC	DE	25067	ABC	DE	27557	2490
14500508	CORINTH ST	8TH ST	CLARENDON DR	DE	F	29594	DE	F	31929	2335
18191502	CORINTH ST	AKARD ST	LAMAR ST	F	DE	24669	DE	ABC	18915	-5754
18192005	CORINTH ST	LAMAR ST	INDUSTRIAL	DE	F	26048	ABC	DE	19651	-6397
18190504	CORINTH ST	HARWOOD ST	ERVAY ST	ABC	ABC	21210	ABC	ABC	13204	-8006
18190009	CORINTH ST	CENTRAL EXPWY	HARWOOD ST	F	F	41712	F	DE	22109	-19603
14500007	CORINTH ST VIADUCT	TRINITY ONRAMP N	8TH ST	DE	DE	27844	F	DE	33580	5736
16121006	DOLPHIN RD	IH30 RAMP EB	HASKELL AVE	ABC	ABC	16769	ABC	ABC	17269	500
19250505	HAMPTON RD	BICKERS ST	DENNISON	ABC	ABC	35100	DE	DE	39939	4839
19251503	HAMPTON RD	SINGLETON	COMMERCE	F	F	43631	F	F	45863	2232
19251008	HAMPTON RD	DENNISON	SINGLETON	DE	DE	39570	DE	DE	43190	3620
19250000	HAMPTON RD	CANADA DR	BICKERS ST	DE	DE	36551	DE	DE	41537	4986
19252055	HAMPTON RD NB	IH30 ONRAMP WB	COMMERCE	F		20945	F		21537	592
19252006	HAMPTON RD SB	COMMERCE	IH30 FRTG WB	F		22339	F		24363	2024
16130007	HATCHER ST	SPRING AVE	LAGOW	ABC	ABC	8429	ABC	ABC	9969	1540
16270001	HATCHER ST	2ND AVE	MALCOLM X	ABC	ABC	13828	ABC	ABC	17738	3910
16270704	HATCHER ST	CROZIER ST	US75 RAMP NB	ABC	ABC	15633	ABC	ABC	20188	4555
16271504	HATCHER ST	US75 RAMP SB	LAMAR ST	ABC	ABC	11879	ABC	ABC	1708	-10171
16271009	HATCHER ST	US75 RAMP NB	US75 RAMP SB	ABC	ABC	19067	ABC	ABC	12022	-7045
16270506	HATCHER ST	BEXAR ST	CROZIER ST	ABC	ABC	12717	ABC	ABC	17008	4291
16270019	HATCHER ST	MALCOLM X BLVD	BEXAR ST	ABC	ABC	18300	ABC	ABC	20029	1729
16131005	HATCHER ST	SCYENE RD	2ND AVE	ABC	ABC	14619	ABC	ABC	18249	3630
16130502	HATCHER ST	LAGOW	SCYENE RD	ABC	ABC	13010	ABC	ABC	14672	1662
16121501	HATCHER ST	HASKELL AVE	SPRING	ABC	ABC	12882	ABC	ABC	13960	1078
25522750	HOUSTON ST VIADUCT	IH30 HOV RAMP	TRINITY ONRAMP			0	ABC	ABC	6457	6457
25524000	HOUSTON ST VIADUCT	TRINITY OFFRAMP	TERRACE	F		9994	F	F	8984	-1010
25523000	HOUSTON ST VIADUCT	TRINITY ONRAMP	TRINITY OFFRAMP	ABC		11442	F	F	8984	-2458
25522509	HOUSTON ST VIADUCT	YOUNG ST	IH30 HOV RAMP			0	F	F	6457	6457
18180550	INDUSTRIAL BLVD	IH35E RAMP SB	INDUSTRIAL RAMP	ABC	ABC	21726	ABC	DE	18713	-3013
18181008	INDUSTRIAL BLVD	CADIZ ST	CORINTH	ABC	ABC	26184	ABC	ABC	21069	-5115
18180755	INDUSTRIAL BLVD	INDUSTRIAL RAMP	CADIZ	ABC	ABC	21726	ABC	DE	18713	-3013

Difference in Traffic Volume - Trinity Parkway Alternatives 4A, 4B & 5

Link ID	Street Name	Street From (Street A)	Street To (Street B)	2030 No Build			2030 Build			Difference Daily Volume
				LOS Street A to B	LOS Street B to A	Daily Volume	LOS Street A to B	LOS Street B to A	Daily Volume	
19313501	INDUSTRIAL BLVD	REUNION BLVD	IH30 RAMP WB	ABC	ABC	26980	ABC	ABC	16646	-10334
19312008	INDUSTRIAL BLVD	IRVING BLVD	CONTINENTAL	F	F	38665	DE	F	29293	-9372
19313006	INDUSTRIAL BLVD	COMMERCE ST	REUNION BLVD	ABC	ABC	21867	ABC	ABC	11441	-10426
19312800	INDUSTRIAL BLVD	SP366 RAMP	COMMERCE	DE	DE	18926	ABC	ABC	14900	-4026
19312701	INDUSTRIAL BLVD	CONTINENTAL AVE	WOODALL RODGERS	DE	DE	18926	ABC	ABC	14900	-4026
19312775	INDUSTRIAL BLVD	WOODALL RODGERS	COMMERCE	DE	DE	18926	ABC	ABC	14900	-4026
19312725	INDUSTRIAL BLVD	WOODALL RODGERS	WOODALL RODGERS	DE	DE	18926	DE	ABC	14900	-4026
18180505	INDUSTRIAL BLVD	IH35E RAMP SB	INDUSTRIAL RAMP	ABC	ABC	21726	ABC	ABC	16060	-5666
19314509	INDUSTRIAL BLVD	IH30 RAMP EB	IH35E RAMP SB	ABC	ABC	28685	ABC	ABC	21571	-7114
19314004	INDUSTRIAL BLVD	IH30 FRTG WB	IH30 FRTG EB	ABC	ABC	27361	ABC	ABC	18701	-8660
19243470	INWOOD BLVD	HARRY HINES OFFR	NEAR IH35E ONRAM	F	F	46355	F	F	48142	1787
19244100	INWOOD RD	TRINITY ONRAMP E	CANADA DR	F	F	47023	F	F	59899	12876
19243500	INWOOD RD	IRVING BLVD	CONVEYOR	F	F	47023	F	F	38693	-8330
19244003	INWOOD RD	TRINITY ONRAMP W	TRINITY ONRAMP E	F	F	47023	F	F	47637	614
19243005	INWOOD RD	IH35E FRTG EB	IRVING BLVD	F	F	86350	F	F	76175	-10175
19242502	INWOOD RD	IH35E FRTG WB	IH35E FRTG EB	F	F	95998	F	F	93012	-2986
22529507	IRVING BLVD	LAKAWANA	INWOOD RD	DE	DE	35974	ABC	ABC	29533	-6441
19070507	IRVING BLVD	MOTOR ST	WYCLIFF	F	F	32025	DE	DE	28617	-3408
19071000	IRVING BLVD	WYCLIFF	TURTLE CREEK BLV	ABC	ABC	23799	ABC	ABC	14172	-9627
19070002	IRVING BLVD	INWOOD RD	MOTOR ST	F	DE	37207	DE	ABC	30806	-6401
19071307	IRVING BLVD	TURTLE CREEK BLV	OAK LAWN	ABC	ABC	17126	ABC	ABC	7449	-9677
19071505	IRVING BLVD	OAK LAWN	INDUSTRIAL	ABC	DE	30516	ABC	ABC	21134	-9382
13485503	JEFFERSON BLVD	8TH ST	FLEMING PL	ABC	ABC	9847	DE	DE	17082	7235
13484506	JEFFERSON BLVD	MARSALIS AVE	EWING	ABC	ABC	3804	ABC	ABC	7211	3407
13484019	JEFFERSON BLVD	CRAWFORD	MARSALIS	ABC	ABC	2095	ABC	ABC	2505	410
13483508	JEFFERSON BLVD	ZANG BLVD	BECKLEY AVE	ABC	ABC	2908	ABC	ABC	2776	-132
13484001	JEFFERSON BLVD	BECKLEY AVE	CRAWFORD	ABC	ABC	2280	ABC	ABC	2113	-167
13485008	JEFFERSON BLVD	EWING AVE	8TH ST	ABC	ABC	10274	DE	ABC	14321	4047
25878745	JEFFERSON BLVD	ZANG PLACE	TRINITY ONRAMP			0	F	ABC	36608	36608
43296632	JEFFERSON BLVD	TERRACE SB	IH35E FRTG SB			0	ABC		3401	3401
13486006	JEFFERSON BLVD	FLEMING PL	COMAL ST	ABC	ABC	2786	ABC	ABC	11773	8987
25871000	JEFFERSON BLVD	ZANG PLACE	TRINITY ONRAMP			0	F	F	33712	33712
18164509	LAMAR ST	CADIZ ST	CORINTH	ABC	DE	18884	ABC	ABC	12266	-6618
14683007	LAMAR ST	PINE ST	HATCHER ST	DE	F	16222	ABC	DE	10138	-6084
14680508	LAMAR ST	FOREST AVE	PENNSYLVANIA	ABC	F	12671	ABC	DE	11319	-1352
14682504	LAMAR ST	IH45 RAMP NB	PINE ST	F	F	17756	ABC	DE	10578	-7178
18165001	LAMAR ST	CORINTH ST	SANTA FE BYPASS	ABC	F	19689	ABC	ABC	15584	-4105
14680003	LAMAR ST	GRAND AVE	FOREST AVE	ABC	F	14252	ABC	DE	13136	-1116
18165200	LAMAR ST	SANTA FE BYPASS	CORINTH ST	ABC	F	19689	ABC	ABC	15584	-4105
18165100	LAMAR ST	SANTA FE BYPASS	SANTA FE BYPASS	ABC	F	19689	ABC	ABC	15584	-4105
14681506	LAMAR ST	METROPOLITAN AVE	IH45 RAMP SB	ABC	DE	10708	ABC	DE	12422	1714
14681001	LAMAR ST	PENNSYLVANIA	COOPER ST	ABC	F	12352	ABC	DE	11299	-1053
14681100	LAMAR ST	COOPER ST	METROPOLITAN	ABC	F	12608	ABC	DE	11743	-865
14682009	LAMAR ST	IH45 RAMP SB	IH45 RAMP NB	DE	DE	15409	ABC	DE	12713	-2696

Difference in Traffic Volume - Trinity Parkway Alternatives 4A, 4B & 5

Link ID	Street Name	Street From (Street A)	Street To (Street B)	2030 No Build			2030 Build			Difference Daily Volume
				LOS Street A to B	LOS Street B to A	Daily Volume	LOS Street A to B	LOS Street B to A	Daily Volume	
14683600	LAMAR ST	TRINITY ONRAMP E	LAMAR CONNECTOR	ABC	ABC	7526	ABC	ABC	5329	-2197
14683650	LAMAR ST	LAMAR CONNECTOR	IH45 RAMP NB	ABC	ABC	5432	ABC	ABC	3104	-2328
14683156	LAMAR ST	HATCHER	US175 EB	ABC	ABC	7526	ABC	ABC	9485	1959
14683502	LAMAR ST	HATCHER ST	TRINITY ONRAMP E	ABC	ABC	7526	F	ABC	10691	3165
18241000	MALCOLM X BLVD	MLK BLVD	PENNSYLVANIA	ABC	DE	5730	ABC	ABC	5579	-151
18242008	MALCOLM X BLVD	WARREN AVE	METROPOLITAN	ABC	ABC	3843	ABC	ABC	3104	-739
18241505	MALCOLM X BLVD	PENNSYLVANIA	WARREN AVE	ABC	ABC	3843	ABC	ABC	3104	-739
16281008	MALCOLM X BLVD	HATCHER ST	SP RR	ABC	ABC	345	ABC	ABC	363	18
16280000	MALCOLM X BLVD	METROPOLITAN AVE	PINE ST	ABC	ABC	4215	ABC	ABC	6885	2670
16280505	MALCOLM X BLVD	PINE ST	HATCHER ST	ABC	ABC	2682	ABC	ABC	4448	1766
18242503	MALCOLM X BLVD	METROPOLITAN AVE	METROPOLITAN	ABC	DE	6689	ABC	ABC	5807	-882
18240002	MALCOLM X BLVD	WALL ST	GRAND AVE	DE	F	9596	ABC	DE	6860	-2736
18240200	MALCOLM X BLVD	OAKLAND RAMP	OAKLAND RAMP	ABC	DE	8466	ABC	DE	5647	-2819
18240507	MALCOLM X BLVD	GRAND AVE	MLK BLVD	ABC	F	6662	ABC	DE	5578	-1084
18330506	MARTIN L KING BLVD	MALCOLM X BLVD	LATIMER ST	ABC	ABC	12928	ABC	ABC	12585	-343
18333500	MARTIN L KING BLVD	FOREST AVE	TRINITY ONRAMP N	ABC	ABC	18696	ABC	ABC	15935	-2761
18333700	MARTIN L KING BLVD	TRINITY OFFRAMP	PONTIAC	ABC	ABC	18696	DE	ABC	20542	1846
18333600	MARTIN L KING BLVD	TRINITY ONRAMP N	TRINITY OFFRAMP	ABC	ABC	18696	DE	ABC	18721	25
18333005	MARTIN L KING BLVD	ERVAY ST	FOREST AVE	ABC	ABC	19812	ABC	ABC	17674	-2138
18330704	MARTIN L KING BLVD	LATIMER ST	US75 RAMP NB	DE	ABC	16841	ABC	ABC	16216	-625
18332007	MARTIN L KING BLVD	HARWOOD ST	COLONEL DR	F	DE	23385	F	ABC	21932	-1453
18331504	MARTIN L KING BLVD	US75 RAMP SB	HARWOOD ST	F	F	24369	DE	ABC	23304	-1065
18332502	MARTIN L KING BLVD	COLONIAL AVE	ERVAY ST	ABC	ABC	18855	ABC	ABC	17088	-1767
18331009	MARTIN L KING BLVD	US75 FRTG NB	US75 RAMP SB	DE	DE	20489	ABC	F	19066	-1423
18330001	MARTIN L KING BLVD	TRUNK	MALCOLM X BLVD	ABC	ABC	7316	ABC	ABC	5696	-1620
18330005	MARTIN L KING BLVD	SH352 RBC	TRUNK	ABC	ABC	7038	ABC	ABC	5469	-1569
37690302	MEMORIAL DR	HOTEL ST	LAMAR ST	ABC	ABC	17066	F	F	35208	18142
18207016	MLK ACCESS	GRAND	IH45 SB OFFRAMP	ABC		3127	ABC		1754	-1373
22528509	SH356	MOCKINGBIRD	COMMONWEALTH DR	DE	F	45055	DE	DE	37522	-7533
22529002	SH356	COMMONWEALTH DR	LAKAWANA	F	DE	43791	DE	ABC	37985	-5806
19120005	SINGLETON BLVD	KINGSBRIDGE	HAMPTON RD	ABC	ABC	16209	ABC	ABC	13887	-2322
22503502	SINGLETON BLVD	WESTMORELAND	KINGSBRIGE	ABC	ABC	16857	ABC	ABC	14229	-2628
19121508	SINGLETON BLVD	SYLVAN AVE	CANADA RAMP	DE	ABC	22287	ABC	DE	21222	-1065
19121003	SINGLETON BLVD	VILBIG	SYLVAN AVE	ABC	ABC	13026	ABC	ABC	11354	-1672
19120500	SINGLETON BLVD	HAMPTON RD	VILBIG	ABC	ABC	14203	ABC	ABC	12071	-2132
19122001	SINGLETON BLVD	CANADA RAMP	CONTINENTAL AVE	DE	DE	23960	ABC	DE	22950	-1010
19292507	SYLVAN AVE	FORTH WORTH AVE	IH30 RAMP WB	DE	F	31700	DE	DE	28871	-2829
19294008	SYLVAN AVE	KESSLER PARK	COLORADO ST	ABC	F	24558	ABC	F	24114	-444
19293505	SYLVAN AVE	IH30 FRTG EB	KESSLER PARK	DE	F	32296	F	F	31839	-457
19293000	SYLVAN AVE	IH30 RAMP WB	IH30 FRTG EB	F	ABC	32262	F	ABC	31213	-1049
19290700	SYLVAN AVE	TRINITY RAMPS	MCBROOM	ABC	DE	18345	ABC	DE	16918	-1427
19291509	SYLVAN AVE	SINGLETON	COMMERCE	DE	DE	26534	DE	DE	25995	-539
19292002	SYLVAN AVE	COMMERCE ST	FORT WORTH AVE	DE	DE	26132	DE	DE	24676	-1456
19291004	SYLVAN AVE	MCBROOM	SINGLETON	ABC	ABC	18578	ABC	ABC	17011	-1567

Difference in Traffic Volume - Trinity Parkway Alternatives 4A, 4B & 5

Link ID	Street Name	Street From (Street A)	Street To (Street B)	2030 No Build			2030 Build			Difference Daily Volume
				LOS Street A to B	LOS Street B to A	Daily Volume	LOS Street A to B	LOS Street B to A	Daily Volume	
19290006	SYLVAN AVE	IRVING BLVD	TRINITY RAMPS	ABC	DE	18345	ABC	F	24531	6186
19290500	SYLVAN AVE	TRINITY RAMPS	TRINITY RAMPS	ABC	DE	18345	ABC	DE	18522	177
43296589	TERRACE SB/IH35E S	TERRACE SB	IH35E FRTG SB			0	DE		16955	16955
43296589	TERRACE SB/IH35E S	TERRACE SB	IH35E FRTG SB			0	ABC		12546	12546
19280502	WYCLIFF AVE	IH35E FRTG SB	IH35E HOV RAMP	ABC	ABC	4430	ABC	ABC	3795	-635
19280775	WYCLIFF AVE	IH35E HOV RAMP	IRVING BLVD	ABC	ABC	4430	ABC	ABC	3795	-635
14411003	ZANG BLVD	BECKLEY AVE	DAVIS SH180	ABC	DE	28443	ABC	DE	23104	-5339
14413009	ZANG BLVD	10TH ST	JEFFERSON BLVD	ABC	DE	29716	ABC	DE	23237	-6479
14412001	ZANG BLVD	7TH ST	9TH ST	DE	DE	30138	ABC	DE	24185	-5953
14412506	ZANG BLVD	9TH ST	10TH ST	DE	DE	29712	ABC	DE	23218	-6494
14411508	ZANG BLVD	DAVIS RD US80	7TH ST	DE	DE	29544	ABC	ABC	23506	-6038
14410500	ZANG BLVD	COLORADO ST	BECKLEY AVE	ABC	ABC	19742	ABC	ABC	12069	-7673
14410677	ZANG BLVD	HOUSTON	COLORADO			0	ABC	ABC	10725	10725
14413695	ZANG BLVD	TERRACE	MARSALIS			0	ABC	ABC	14544	14544

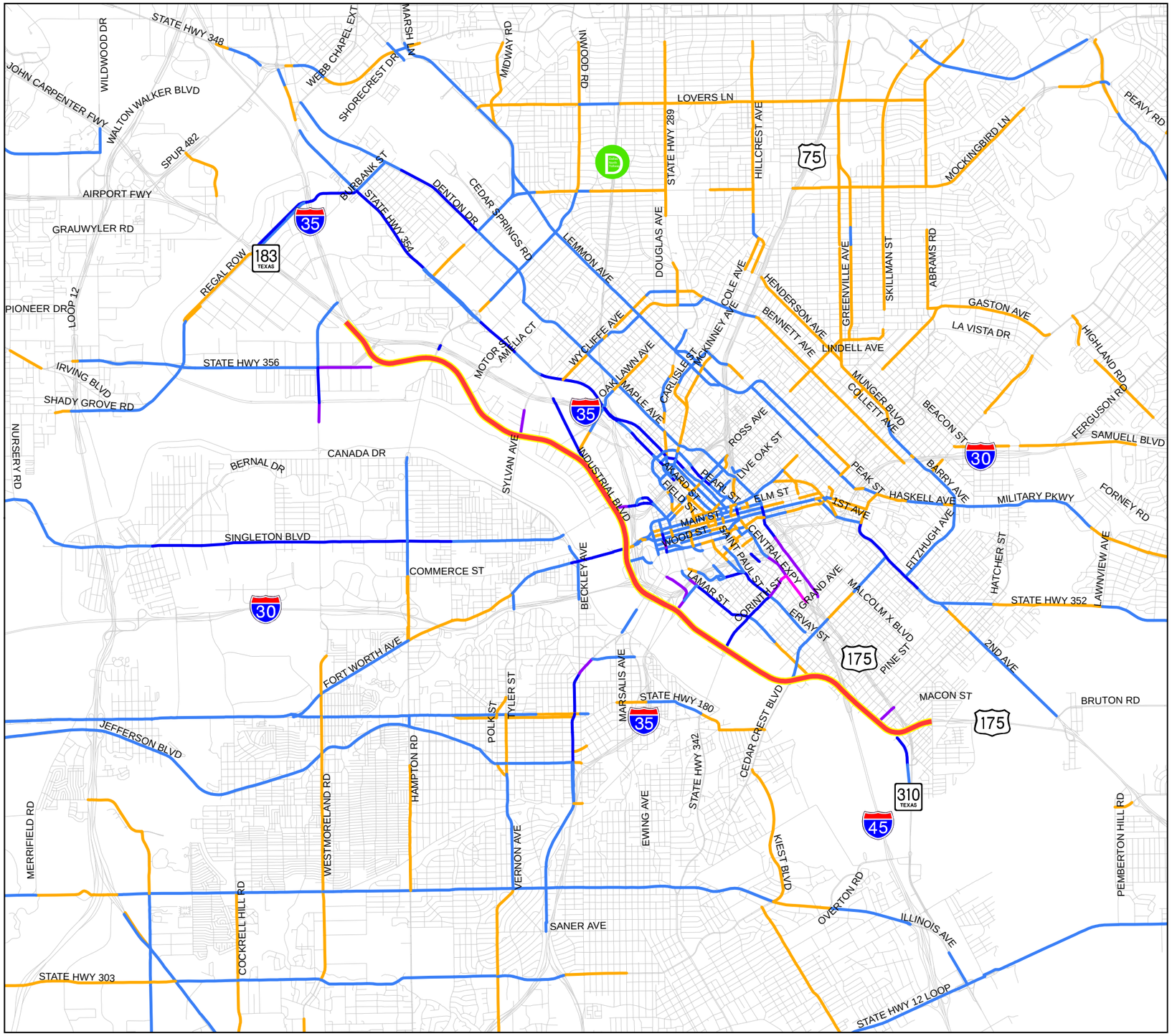

TRINITY PARKWAY ALTERNATIVES 2A & 2B
2030 BUILD - NO BUILD COMPARISON
TRAFFIC REDISTRIBUTION (DECREASE)

NTTA
NORTH TEXAS TOLLWAY AUTHORITY

Legend

Trinity Parkway Alternatives 2A & 2B

Decrease in Vehicles per Day

- 1 - 600
- 601 - 3,500
- 3,501 - 6,500
- 6,501 - 15,000
- > 15,000

Notes:
All locations are approximate.
Analysis reflects changes on major and minor arterials only.

0 0.5 1 2
SCALE IN MILE

N

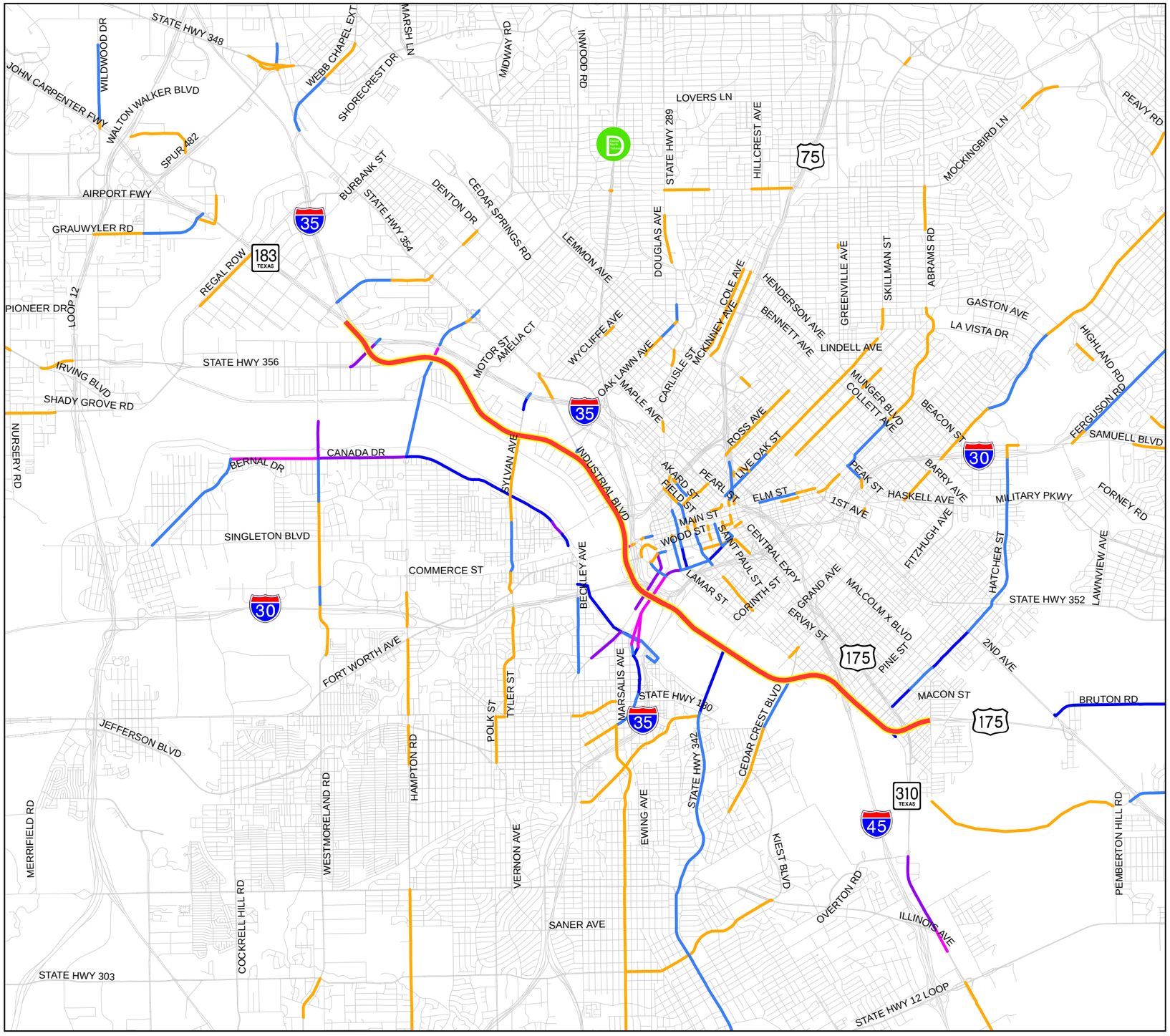

TRINITY PARKWAY ALTERNATIVES 2A & 2B
2030 BUILD - NO BUILD COMPARISON
TRAFFIC REDISTRIBUTION (INCREASE)

NTTA
NORTH TEXAS TOLLWAY AUTHORITY

Legend

Trinity Parkway Alternatives 2A & 2B

Increase in Vehicles per Day

- 1 - 600
- 601 - 3,500
- 3,501 - 6,500
- 6,501 - 15,000
- > 15,000

Notes:
All locations are approximate.
Analysis reflects changes on major and minor arterials only.

0 0.5 1 2
SCALE IN MILE

N

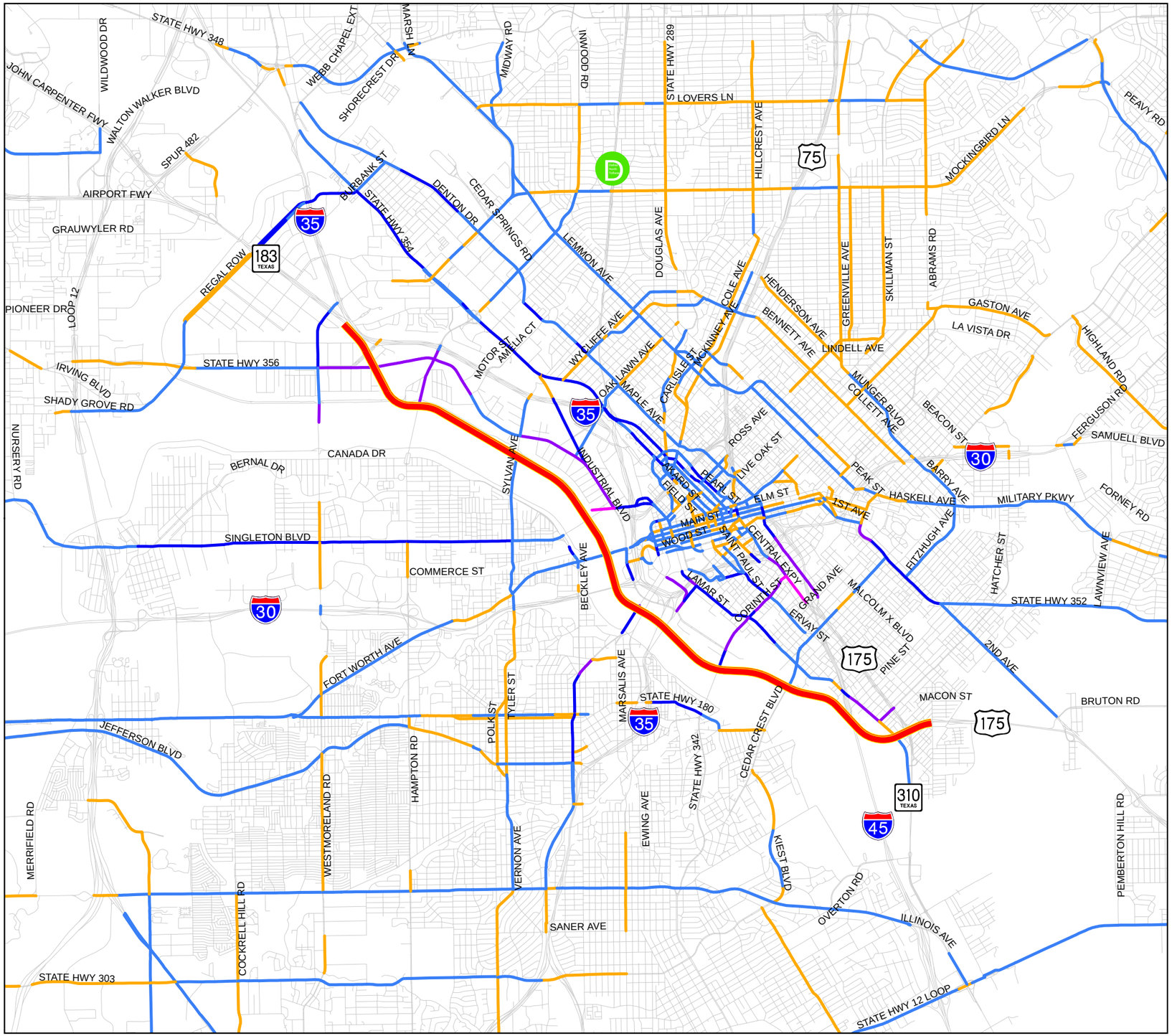

TRINITY PARKWAY ALTERNATIVES 3A, 3B & 3C
2030 BUILD - NO BUILD COMPARISON
TRAFFIC REDISTRIBUTION (DECREASE)

NTTA
NORTH TEXAS TOLLWAY AUTHORITY

Legend

Trinity Parkway Alternatives 3A, 3B & 3C

Decrease in Vehicles per Day

- 1 - 600
- 601 - 3,500
- 3,501 - 6,500
- 6,501 - 15,000
- > 15,000

Notes:
All locations are approximate.
Analysis reflects changes on major and minor arterials only.

0 0.5 1 2
SCALE IN MILE

N

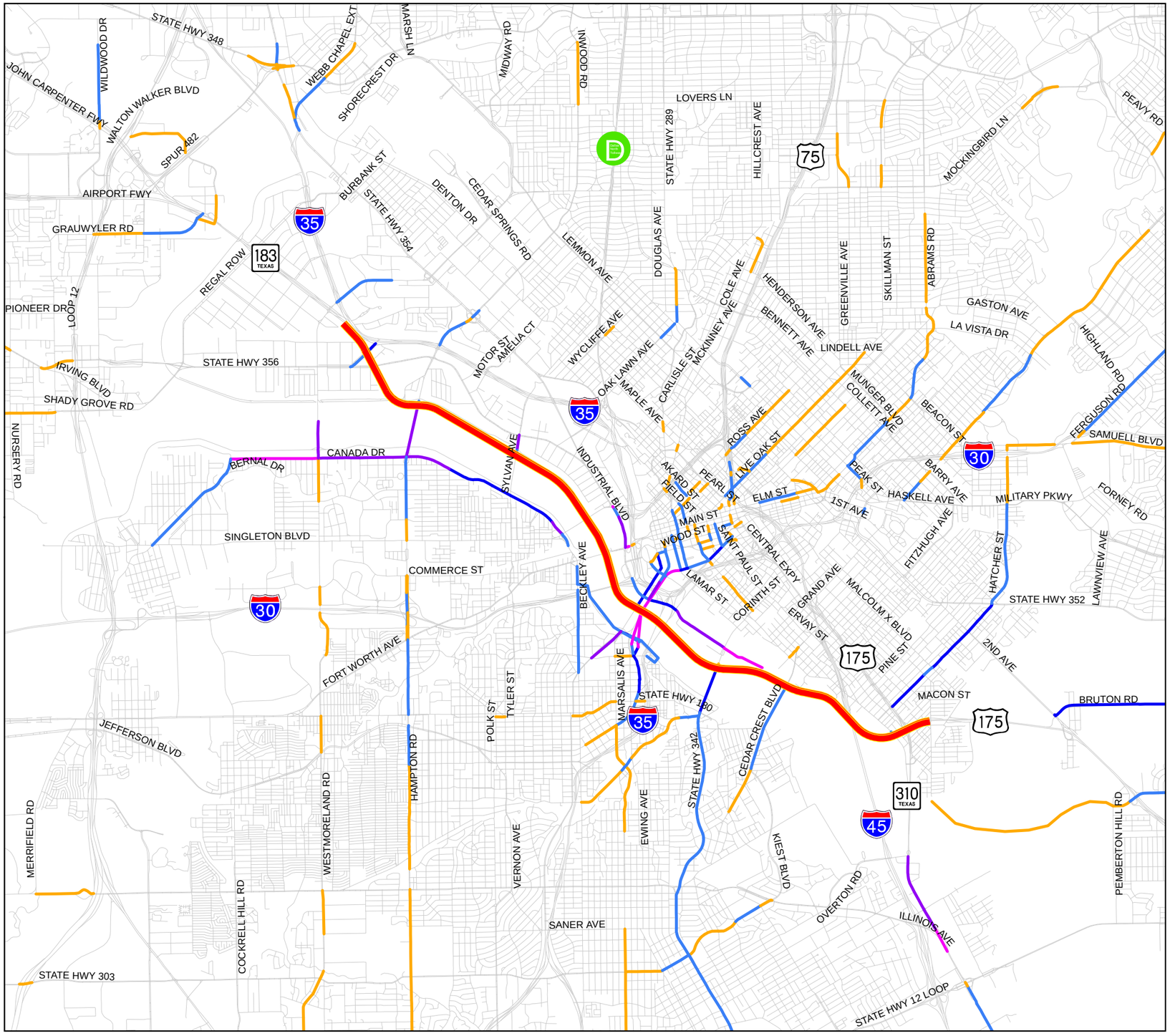

TRINITY PARKWAY ALTERNATIVES 3A, 3B & 3C
2030 BUILD - NO BUILD COMPARISON
TRAFFIC REDISTRIBUTION (INCREASE)

NTTA
NORTH TEXAS TOLLWAY AUTHORITY

Legend

Trinity Parkway Alternatives 3A, 3B & 3C

Increase in Vehicles per Day

- 1 - 600
- 601 - 3,500
- 3,501 - 6,500
- 6,501 - 15,000
- > 15,000

Notes:
All locations are approximate.
Analysis reflects changes on major and minor arterials only.

0 0.5 1 2
SCALE IN MILE

N

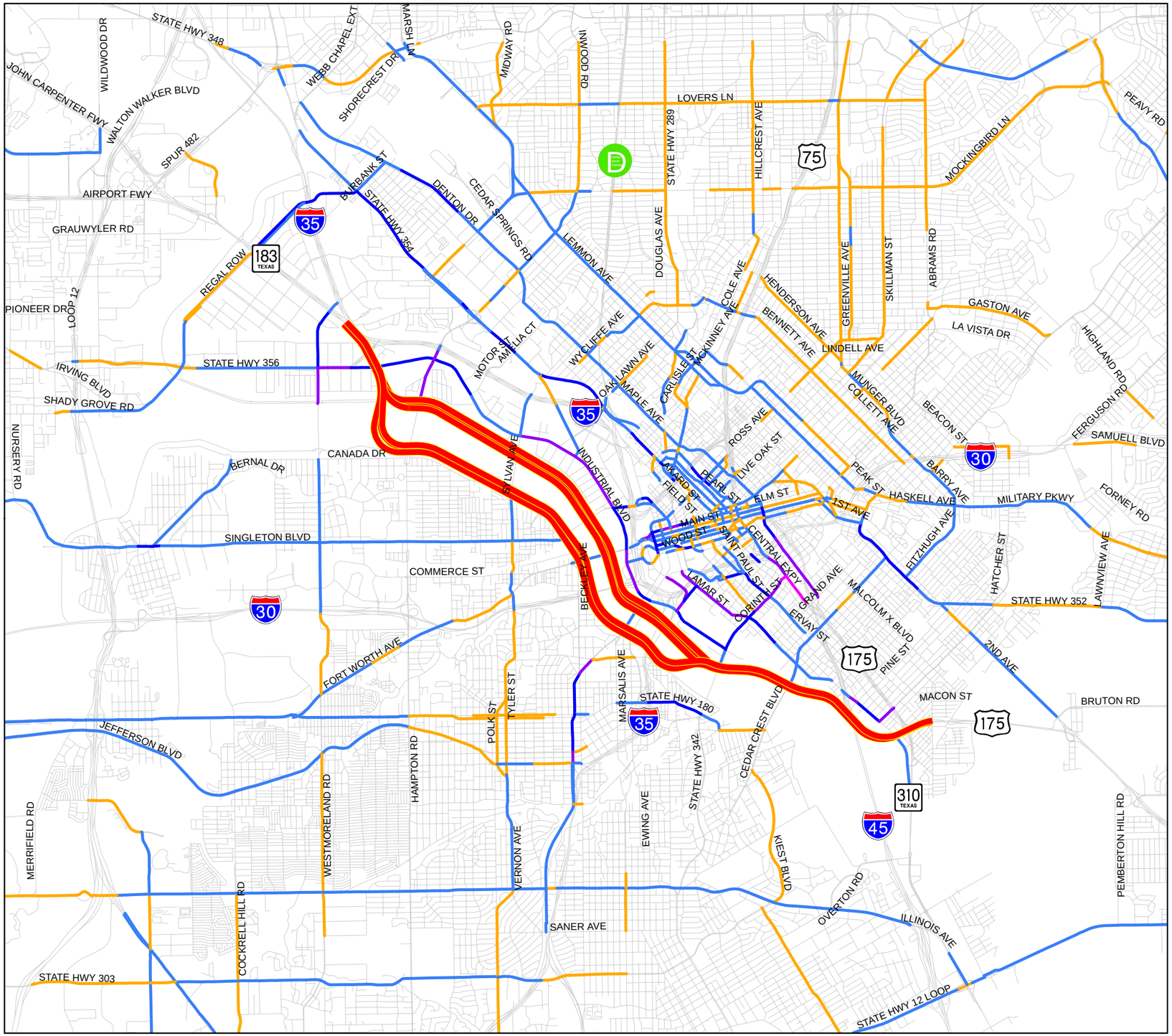

TRINITY PARKWAY ALTERNATIVES 4A, 4B & 5
2030 BUILD - NO BUILD COMPARISON
TRAFFIC REDISTRIBUTION (DECREASE)

NTTA
NORTH TEXAS TOLLWAY AUTHORITY

Legend

Trinity Parkway Alternatives 4A, 4B & 5

Decrease in Vehicles per Day

- 1 - 600
- 601 - 3,500
- 3,501 - 6,500
- 6,501 - 15,000
- > 15,000

Notes:
All locations are approximate.
Analysis reflects changes on major and minor arterials only.

0 0.5 1 2
SCALE IN MILE

N

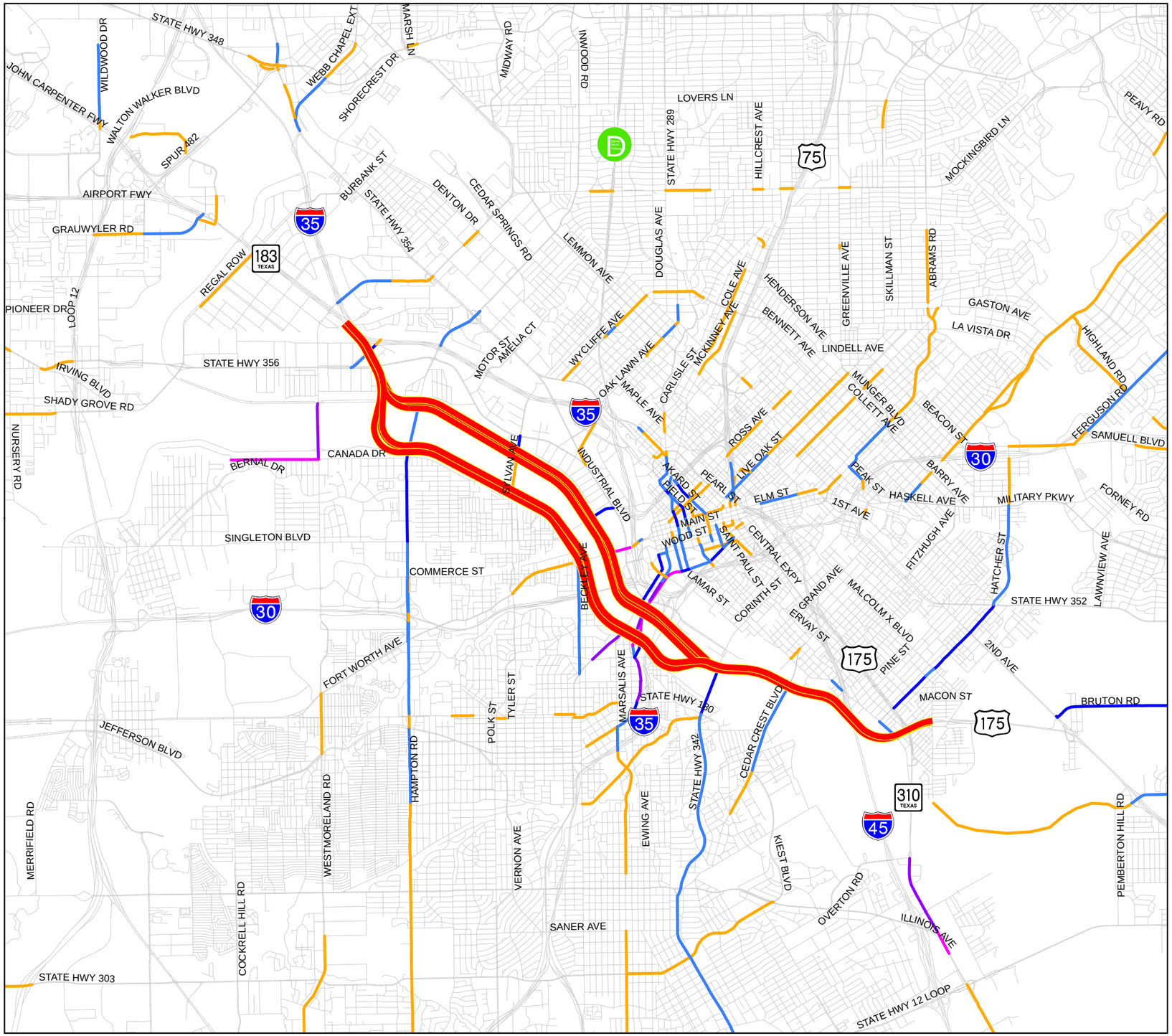

TRINITY PARKWAY ALTERNATIVES 4A, 4B & 5
2030 BUILD - NO BUILD COMPARISON
TRAFFIC REDISTRIBUTION (INCREASE)

NTTA
NORTH TEXAS TOLLWAY AUTHORITY

Legend

Trinity Parkway Alternatives 4A, 4B & 5

Increase in Vehicles per Day

- 1 - 600
- 601 - 3,500
- 3,501 - 6,500
- 6,501 - 15,000
- > 15,000

Notes:
All locations are approximate.
Analysis reflects changes on major and minor arterials only.

0 0.5 1 2
SCALE IN MILE

N

APPENDIX L-7
PROJECT SPECIFIC MTP AND TIP PAGES

THIS PAGE INTENTIONALLY LEFT BLANK

THE PROJECT SPECIFIC MTP AND TIP PAGES ARE UNDERGOING REVISIONS AND WILL BE INSERTED HERE ONCE AVAILABLE

THIS PAGE INTENTIONALLY LEFT BLANK