Roadway Electrical System Manual

Version II

July 2008

NTTA®

NORTH TEXAS TOLLWAY AUTHORITY

Table of Contents

Chapter 1	Introduction
Chapter 2	General Electrical Guidelines
Chapter 3	Electrical Distribution Systems
Chapter 4	Power Systems Design
Chapter 5	Lighting Systems Design
Chapter 6	Lighting Equipment
Chapter 7	Bridge Electrical Systems Design
Chapter 8	Voltage Drop
Appendix A	Typical Design For a Section of NTTA Roadway

Chapter 1 - Introduction

1.1 Purpose of Manual

1.1.1 This manual is to provide NTTA system procedures and information concerning electrical systems serving main lane and ramp gantries, the illumination of roadways, power supplies for communication huts, ITS elements and irrigation controllers. It does not cover power or illumination inside of buildings or other facilities.

1.1.2 As NTTA facilities cover a large geographic area, not every contingency can be accounted for. It shall be the responsibility of the Program Management Office (PMO), General Engineering Consultant (GEC), the Maintenance Management Consultant (MMC), and a qualified member of the Electrical Maintenance Division to ensure the individual design engineer meets the intent of this manual and the NTTA Standards. It is the further intent of this manual to ensure standardization of equipment to reduce the cost of inventory.

1.1.3 This manual is for use by electrical designers and engineers during the preparation of plans for NTTA projects. It is not for the direct use of contractors or construction personnel during the actual construction of roadways.

1.1.4 Prior to preliminary or detailed design, the designers should review any Inter-Local Agreement (ILA), this Roadway Electrical Systems Manual (RESM), System Wide Design Guidelines (SWDG) and the TxDOT *Highway Illumination Manual*.

1.1.5 The Designer shall coordinate with the Tollway sections adjacent to the design they are responsible for. When the design of multiple roadway sections are apportioned to different design firms, all electrical work specified herein shall be coordinated with the work of other Section Engineer's working on the Project and completed so that all installations shall operate as a single unified system design. The designer shall also consider all plans for future expansion.

1.2 ILA Coordination with Design

1.2.1 The ILA is a binding legal document with the NTTA and assigns full responsibility for operations and maintenance costs for all elements of the design and any preferences for equipment selection or placement in regard to aesthetics or maintenance, third party agreements with utilities, etc.

1.2.2 Prior to preliminary or detailed design, the designer shall review and subsequently discuss with the NTTA the ILA's between all municipalities involved. This discussion should establish:

1.2.3 The municipality's consent to assume the operational and maintenance costs for power and lighting systems and assets through a documented and signed ILA between the NTTA and the municipality.

1.2.4 That the design should not begin without the municipality's consent to maintain and operate the power and lighting systems for the non-NTTA facilities.

1.2.5 That the ILA should make specific reference to the NTTA's responsibilities associated specifically with the maintenance and repair of all power and illumination systems for all mainlanes, ramps, frontage roads or crossroad intersections and high mast lighting structures.

1.2.6 Any local municipality's preferences for equipment selection or placement, thus allowing the designer to accommodate the municipality's need with regard to aesthetics, maintenance agreements with utilities, etc.

1.3 Responsibilities

1.3.1 The NTTA shall provide the roadway schematic plans based on the Final Environmental Impact Statement (FEIS) for design of an Illumination, Electrical and ITS Master Plan. The Master Plans shall be coordinated with the local electrical service provider and identify all preliminary proposed electrical service center locations. Special requirements shall be identified.

1.3.2 The NTTA Maintenance and IT Departments shall review the Master Plans prior to the Plans, Specifications and Estimate (PS&E) process.

1.4 PS&E Plan Standards

1.4.1 Plan scales of 1"=100' typically provide enough detail for lighting, electrical and ITS layouts. This scale will allow all electrical and site work for the section to be shown with adequate detail to enable the contractor to efficiently bid and install the system

1.4.2 The NTTA has developed standard symbols in the NTTA CADD standards to aid in plan preparation and the numbering of poles, circuits, ground boxes, communication system and ESC's.

1.4.3 Tables shall be used to summarize design requirements and will include the following: a legend explaining the symbols used; a conduit and

conductor run table; a table of ground box type and location, a table of roadway illumination assemblies, ITS pole types and locations; a sheet summary table; and an ESC data table which identifies the various types of ESC's used and their service locations. All NTTA pay item quantities shall be summarized in the plans and be included in the estimate and sheet.

1.4.4 The electrical plans and details shall provide the information necessary for a contractor to bid and construct the complete electrical and communication system. As a minimum, the following plan sheets should be provided:

1.4.5 Roadway ILL/ITS Plan - these sheets should show overall layout and provide the locations of proposed and existing features such as: edges of pavement, shoulders and curbs; luminaire supports and spacing; required lighting for any infrastructure elements, ITS elements, gantry power and interconnection along with conduit, conductors, pole numbering, landscape controller locations, ESC locations with a detailed section cut, existing/proposed utility company service points, meter locations and ground boxes.

1.4.6 Tables for Luminaire Structures, Luminaires, Conduit & Conductor, Ground Box and ESC Installations - the information on these sheets may be presented on the ILL/ITS plans or on separate sheets at the end of the plan layout sequence. The tables shall specify the details associated with each asset. All assets shall be provided an identification number and located by station and lateral offset, (indicate what control line is used to measure from); and location by Northing and Easting coordinates. Luminaire structure and ESC foundation elevation; and foundation type. Pole information will depict the material type and the type of mounting base used on the structure. Information shall also include the type and number of arms and the rise and length of the arms. Luminaire information will include luminaire model, voltage, lamp size, mounting height and IES distribution type. Conduit and conductor runs will show the size of the conduit and the size and quantity of the conductors to be installed. Ground box details will include the ground box type, location, (I.e. in-ground, rail, bridge, etc.) and the size if not a TxDOT standard.

1.4.7 Wiring Details - these sheets shall provide details for circuit wiring, transformer base wiring, photocell controller wiring and one line diagrams for both illumination and ITS connections.

1.4.8 Pole Foundation Details - these sheets shall provide special installation details for cut or fill locations and dimensional requirements of foundation and conduit placements.

1.4.9 Pole Details - these sheets shall provide for the NTTA's model and other identification numbers. General configuration details and other information deemed necessary by the NTTA.

1.4.10 Miscellaneous Details - If required, these sheets shall provide information showing the limits of clearing and grubbing of existing trees in the path of light and in the vicinity of the luminaries, ITS component, and ground boxes.

1.5 Submittal Requirements

1.5.1 Upon completion of the Master Plans, the next submittal for roadway illumination and ITS will be at the 60% PS&E level. The engineer will let other disciplines know of problem areas for the roadway which will require civil or other disciplines to adjust the layout or make any changes required.

1.6 Electrical Report

1.6.1 The designer shall prepare a lighting report and retain it in the project files for future use when roadway modifications require revision to the lighting system. In addition, the report will document and provide a means for reviewing the basis for the design and that the design is consistent with the guidance provided herein as it progresses from inception to final design.

1.6.2 A lighting report should be submitted for NTTA review from the 60% PS&E level to the 100% final plans level. Prior to submitting the preliminary lighting report, the designer shall establish the lighting criteria based on the specifications given in the NTTA's System Wide Design Guidelines, NTTA Standards, the NTTA Roadway Electrical System Manual, and any local requirements. The purpose of this step is to establish and agree upon the lighting levels (design criteria) as preliminary design work begins.

1.6.3 Designer shall submit 5 additional copies of the lighting report so that the Project Manager and the NTTA can further coordinate with the municipality and utility company. Continued coordination with these agencies should prevent problems associated with electric service connection, assumption of maintenance responsibility, or other issues which may be difficult to resolve late in project development or construction. A written reply from these agencies may be useful to document their concurrence with the design. It is important that the municipalities are satisfied in those aspects of the design for which they will become responsible for servicing and maintaining. All

correspondence with the utility and municipality should be added to the project file.

1.7 Preliminary Electrical Report

1.7.1 The preliminary Electrical and Lighting report shall be based on the Illumination and ITS Master Plan and establish the basic components of the lighting system and identify them in sufficient detail so that the system can be laid out and completed during the design phase. The designer shall include the following information: light source type, light source size and mounting height, luminaire type and location, luminaire spacing and arrangement, power supply point(s), hardware, and calculations (manual or computer printouts) which verify the lighting design criteria.

1.7.2 Once approved the next submittal will be a 90 percent set of drawings. The engineer shall have the drawings complete with only minor coordination needed to finalize the drawings. These drawings shall be ready to permit.

1.8 Final Electrical Report

1.8.1 The Final Electrical report shall build upon and resolve the comments made regarding the preliminary lighting report. Design tasks performed leading up to and reflected in the design lighting report shall include: energy consumption and cost calculations, voltage drop calculations performed to determine conductor (wire) size, and other determinations necessary to finalize the plans.

1.9 Reference Standards

AASHTO	American Association of State Highway and Transportation Officials
AEIC	Association of Edison Illuminating Companies
ANSI	American National Standards Institute, Inc.
ASME	American Society of Mechanical Engineers
ASTM	American Society for Testing and Materials
AVI TTS	Automatic Vehicle Identification Travel Time Sensor
CCTV	Closed Circuit Television
DMS	Dynamic Message Sign

ELMS	Electrical and Lighting Management System
ESC	Electrical Service Center
ESP	Electrical Service Provider
IEEE	Institute of Electrical and Electronic Engineers
IESNA	Illuminating Engineering Society of North America
ILA	Inter-local Agreement
IPCEA	Insulated Power Cable Engineers Association
ITS	Intelligent Transportation System
JIC	Joint Industrial Conference
MLG	Main Lane Gantry
NEC	National Electrical Code
NEMA	National Electrical Manufacturer Association
NESC	National Electrical Safety Code
NFPA	National Fire Protection Association
NTTA	North Texas Tollway Authority
OSHA	Occupations Safety and Health Act
PMO	Program Management Office
RG	Ramp Gantry
RWIS	Roadway Weather Information System
SWDG	System Wide Design Guideline
TxDOT	Texas Department of Transportation
UL	Underwriters Laboratories

Chapter 2 - General Electrical Services

2.1 Introduction

2.1.1 **This chapter covers the general requirements for electrical services. More specific details are given in later chapters.**

2.2 Priority for Location of Electrical Service

2.2.1 The designer's primary task is to identify the main locations which require power. Based on these locations, the designer shall place the electrical service as close as possible to the major loads with no more than one 400 amp ESC every 4000 to 6500 feet along the roadway. The hierarchy of ESC locations should be based on the following:

2.2.2 Main Lane Gantries will have a 200 amp, 480 volt, single phase, 2 wire supplied from a 400 amp ESC. The designer will coordinate with the Main Lane Gantry standard drawings for exact location of the ESC.

2.2.3 Ramp Gantries will have a 60 amp, 480 volt, single phase, 2 wire supplied from an ESC. Up to four Ramp Gantries may be served from a single 200 amp ESC if they are within the 4000 to 6500 segment of roadway served by the ESC.

2.2.4 Communication Huts will have a 40 amp, 480 volt, single phase, 2 wire supplied from an ESC to each Communication Hut. The Communication Huts are generally located at major interchanges and at the beginning and/or ending of a proposed roadway phase or addition.

2.2.5 Electrical power supplies required for Illumination or ITS Elements (Dynamic Message Signs, Closed Circuit Television, and Automatic Vehicle Identification Travel Time Sensors (AVI TTS) which cannot be served from one of the locations above, shall use a 400 amp ESC centered or positioned so the resulting placement will best provide for other service requirements.

2.3 Utilization Voltages

2.3.1 ESC's shall be supplied by a 400 amp, 480V, single phase 2 wire service.

2.3.2 ESC's shall distribute to all ITS elements and roadway illumination at 480V, single phase, two wires. Each ITS element location shall utilize a transformer to obtain the required 120/240 volt power supply.

2.3.3 There may be some local roadway illumination designed and installed at NTTA expense which reverts to municipal ownership and maintenance after construction is complete. These locations may require separate TxDOT standard services or municipality designed power supplies for traffic signalization locations and/or cross street municipal lighting.

2.4 Device Locations

2.4.1 The contractor shall be directed to provide as a part of the "Project Record Documents" the final location of any ESC serving a gantry, Communication hut, ITS element and all fixture locations, both by station/offset and by GPS coordinates.

2.5 Codes

2.5.1 All work shall be designed in accordance with the latest versions of the National Electrical Code and the National Electrical Safety Code.

Chapter 3 – Electrical Distribution Systems

3.1 Introduction

3.1.1 **This chapter covers the sizing of ESC's based on equipment loads to be supplied and the construction of the ESC's including physical protection.**

3.2 "H" Pattern

3.2.1 The general circuit layout for power distribution from the ESC's shall be in an "H" pattern. The conduits shall originate from the service point, cross the highway and go both directions as needed, see Appendices**.**

3.3 Preferred locations of Electrical Services

3.3.1 All ESC's shall be placed in accordance with the hierarchy established in chapter 2 and located so as to avoid damage from errant traffic on a maximum 4:1 slope. Where this cannot be achieved by location alone, rigid or flexible barrier shall be placed to protect the ESC. The preferred location for electrical services centers is along NTTA-owned property with enough space to accommodate a minimum of two service vehicles. Secondary locations any be underneath bridges crossing over intersecting municipal roadways**.**

3.3.2 The following information about electrical service centers and service entrance disconnect (S/E) shall be supplied to the project manager and Maintenance Department's Infrastructure Manager.

Street address
ESC Number
GPS Location/Station & Offset
Side of road with travel direction
Access by service road or main lane

3.4 Sizing of Electrical Services

3.4.1 Electrical services are sized based on the anticipated equipment loads and any future additional loads to be supplied. Equipment along the roadway includes: Main Lane Gantries, Ramp Gantries, roadway Illumination structures, Communication Huts, ITS elements and irrigation systems**.**

3.4.2 The combined electrical loads at the two Main Lane Gantries will include electronic toll collection equipment, ITS equipment, and LED signs. A Main Lane Gantry location will be supplied by a 200 amp circuit breaker located at an ESC; and an 200 amp panelboard with (2) 125 Amp 2 pole breaker to each Main Lane Gantry.This panelboard will be placed on the same side as the generator. The generator will be placed only on one side of the roadway supplying a 200 amp 480 volt single phase Automatic Transfer Switch (ATS) Each support building located at a Main Lane Gantry equipment structure will have a 125 amp service supplying a 45 KVA 480-120/240 volt transformer.

3.4.3 The electrical loads at a Ramp Gantry will include electronic toll collection equipment, ITS equipment, and LED signs. The utilization equipment operates at 120/240V, therefore, the design shall include a 25 KVA 480-120/240V transformer. The total connected load at a Ramp Gantry averages approximately 19.2 KVA. Thus an ESC will have a 60 amp, 480V single phase power supply available for each anticipated Ramp Gantry.

3.4.4 The Arc Flash requirements for the main panel in the ESC is Category 4 and the rest of the panels will be category 0. This is based on a short circuit current of less than 10000 amp at the main ESC. Category 4 requires worker to wear cotton underwear, Fire Retardant shirt and pant and multi layer flash suit went working on this panel hot.

3.4.5 Although present NTTA policy is to not use continuous lighting along NTTA roadways, the electrical service should account for future continuous lighting. It is estimated continuous illumination of a 4000 to 6500 foot section of roadway will require 25 KVA without high mast fixtures and 37.5 KVA with high mast fixtures.

The other loads per section of roadway may include the following items:

NTTA LOADS AND CIRCUIT BREAKER REQUIREMENT
(ALL LOADS REQUIRE NETURALS)

* LOAD TYPE	AMP	VOLTS	** Mini Power Enclosure (MPE) Size	# POLES
DMS	23	480-120/240	5KVA	16
CCTV	13	480-120/240	5KVA	8
AVI TTS	13	480-120/240	5KVA	8
AVI TTS A/C	13			
COMMUNICATION HUT	37	480-120/240	15KVA	16

* LOAD TYPE	AMP	VOLTS	** Mini Power Enclosure (MPE) Size	# POLES
LED LIGHTING	20	480-120/240	5KVA	8
IRRIGATION CONTROLER	1	480-120/240	5KVA	8

*Verify current loading requirements with the NTTA IT Department.
**Provide GFCI breakers (not receptacles) as required.
See single line and panel schedules for load breakdown.

3.5 NTTA versus ILA Electrical Service Installations

3.5.1 In some cases there may be Inter-Local Agreements that require an electrical service different from the NTTA standard ESC. This is most likely to occur when a service is required at an intersection requiring signalization/illumination that is not normally a part of the NTTA roadway system. The designer shall verify these requirements on each project. For these locations, the designer shall use the Municipality's standards or the TxDOT standards.

3.6 Electrical Service Center Enclosures

3.6.1 The designer shall reference the NTTA ESC standards for enclosure and equipment details. Each enclosure shall be 316 stainless steel, and NEMA 3R rated with a gasketed, lockable door. Enclosures inside of the NEMA 3R enclosure shall be NEMA 1. The enclosure shall be secured to a concrete foundation. The enclosure shall have two screened vents; one on the side wall near the bottom and the other on the opposite side near the top of the enclosure. Both vents will utilize insect resistant screening.

3.6.2 The enclosures are required to have in 4" letters "DANGER High Voltage" mounted on the front door. In addition, the following labels shall be provided and mounted on the front door of the enclosure on engraved, phenolic tags with black lettering on yellow background in the following sizes:

2"- Street Address
1"- ESC Number
1"- GPS Location
1"- Arc Flash Information

All labels will be adhesive backed and permanently held in place by self taping stainless steel screws. Mounting holes in the label will be countersunk and appropriate screws used to achieve a flush finish

Chapter 4 - Power Systems Design

4.1 Introduction

4.1.1 **This chapter covers the design of power supplies to the individual components along the roadway. It includes the systems for roadway illumination, Main Lane Gantries, Ramp Gantries, ITS elements, Communication Huts, and irrigation controllers.**

4.2 Communication Hut Power Design

4.2.1 Communication Huts occur approximately every 10 miles of roadway and at each major interchange. The Communication Hut will be supplied by one of the 480V, 40 amp, single phase circuit breakers inside the main distribution panel. The 120/240V power shall be provided by a 15 kVA mini power enclosure.

4.3 ITS Power Design

4.3.1 All ITS element locations (DMS, CCTV and AVI TTS) shall be supplied with 480V, single phase power from the ESC by 60 amp, 2 pole circuit breakers located in the ITS panelboard with one circuit breaker dedicated for each leg on the "H" pattern layout. Each ITS element or DMS location is served from an MPE which transforms the voltage. The 120/240V power shall be provided by a 5 kVA mini power enclosure for one or two ITS elements, 10 kVA mini power enclosure for three or four ITS elements, or a 15 kVA mini power enclosure for five or more ITS elements at one location. A single DMS sign requires a 10 kVA mini power enclosure. See the NTTA MPE standards for more details.

4.3.2 A typical ITS element is the combination of a DMS, a CCTV, and an AVI TTS. At present, a typical DMS requires one 40A, 2-pole 240V circuit. A CCTV location typically consists of 4 fixed cameras and one pan-tilt-zoom (PTZ) camera. These combined loads require two 20A, 120V circuits, one circuit for camera operation and one circuit for the weatherized housing. These shall be supplied with a 480V, single phase tapped circuit supplying a mini power enclosure, at each location.

4.4 ITS Conduits and Conductors

4.4.1 In the installation of DMS, CCTV and AVI TTS devices, the designer shall size and provide the feeder conductors in an "H" pattern if supplying elements on each portion of the pattern. Feeder conduit size shall be 2" diameter with a minimum of 12" spacing (outside wall to outside wall) between other conduits in the same trench.

4.4.2 The design engineer shall provide conduits and conductors from an in-ground TxDOT Type D box located over the ITS feeder circuit. The ground box is for tapping the feeder conductors and supplying power to the local, mini power enclosure, which supplies the individual ITS element(s).

4.5 Landscaping

4.5.1 The locations of landscape controllers and weather stations are typically adjacent to an ITS site where power and communications are available. If there are no ITS sites available, the second preferred location for landscape controllers is adjacent to Main Lane or Ramp Gantry ESC's. . The landscape architect shall be responsible to ensure this coordination. A 120V circuit for irrigation controllers is available at all mini power enclosure transformer locations. The ESC has a mini power enclosure and therefore a circuit for the landscape controller is available.

4.6 Roadway Illumination

4.6.1 Roadway luminaires: Shall operate at 480V, single phase power from the ESC by 60 amp, 2 pole circuit breakers located in the Illumination panelboard with one circuit breaker dedicated for each leg of the "H" pattern layout. The maximum wire size to be used inside of any pole shall be #2 AWG and the minimum shall be #10 AWG. The smallest conduit size shall be 2" diameter. (Unless fed from a rail or wall mounted junction box where a 1" PVC coated rigid metal conduit routing from the junction box to inside the pole shaft is permissible.)

4.7 Ground Boxes

4.7.1 Ground boxes construction and Installation: All electrical ground boxes will be TxDOT Type D w/apron, installed per TxDOT ED standard. The conduit shall enter from the bottom of the box. This box shall not be subjected to traffic loading. All ground boxes shall be located every 460 feet of continuous conduit run. The tables shall specify the details associated with the ground box such as: ground box number; location by station; lateral offset of ground box (indicate what control line is used to measure from); final location by Northing and Easting coordinates; and ground box type.

4.7.2 Rail or Median Boxes: All junction boxes in the rail or CTB shall be cast iron and recessed 1/2".

4.8 Conduit and Wire

4.8.1 All exposed conduits shall be GRS.

4.8.2 All conduits encased in concrete shall be GRS.

4.8.3 All underground conduits not bored shall be Schedule 40 PVC and <u>any bends will be factory made PVC coated GRS.</u>

4.8.4 Stub-up's shall be PVC coated GRS and extend a minimum of 2" AFS.

4.8.5 Boring will be permitted and shall be made utilizing HDPE conduit. Fittings shall be installed by heat fusion joint methods.

4.8.6 Duct cable shall not be used.

4.8.7 All wiring shall be stranded copper conductors with XHHW-2 insulation.

Chapter 5 - Lighting Systems Design

5.1 Introduction

5.1.1 This chapter covers illumination coverage and illumination levels. Also included are factors that must be considered in lighting design; including curfews and “dark sky” requirements.

5.1.2 The illumination design shall be in accordance with the IES/ANSI RP-8, the American National Standard Practice for Roadway Lighting and the TxDOT Highway Illumination Manual. The illumination design shall use, in order of importance, any Inter-Local Agreement, the NTTA plans and standards, NTTA special provisions, NTTA general notes, NTTA special specifications, and the TxDOT standard specifications.

5.2 Continuous Lighting

5.2.1 A continuous lighting system provides relatively uniform lighting on all main lanes, direct connectors and complete interchange lighting at all interchanges. Frontage roads may be included if so directed by NTTA.

5.2.2 The lighting units will consist of the approved system wide design guideline illumination structure and luminaire.

5.3 Safety Lighting

5.3.1 Safety lighting may be installed at any interchange, highway intersection, or other decision making point or points of night time hazard. Safety lighting may be used to provide for an increase in safety and the orderly movement of traffic. There are three kinds of safety lightning: partial interchange/intersection, complete interchange/intersection and spot.

5.3.2 Partial interchange/intersection lighting covers acceleration/deceleration lanes up to and away from the main lanes, ramps, intersections at frontage roads, ramp entrances and other areas as required.

5.3.3 Complete interchange lighting covers the limits of the interchange including main lanes, direct connectors, ramps, frontage roads and crossroad intersections.

5.3.4 Spot lighting consists of luminaires intended to illuminate sections with complex geometry.

5.4 Lighting Curfews/ELMS Control

5.4.1 Curfews for lighting involve the use of controls to turn off or dim selected parts of the lighting systems as permitted by reduced traffic flow, favorable weather conditions and other local conditions. At this time NTTA does not utilize an ELMS to control lighting, but this may be directed as part of a future project.

5.5 Light Trespass

5.5.1 In all cases, lighting systems shall be designed to minimize light trespass outside of the roadway area. Special consideration shall be given to residential areas.

5.6 Contactors

5.6.1 All roadway lighting shall be controlled by photocells through contactors controlling the illumination panel. The photocell shall be located atop the closest light pole mounted fixture nearest the ESC. Each contactor shall have a HAND-OFF-AUTO switch to override the photocell.

5.7 Illumination Levels

5.7.1 The area selected to be illuminated, whether continuous or safety lighting, shall be illuminated to the level of 0.6 to 0.9 foot candles with approximately a 3:1 uniformity.

5.8 Glare and Sky Glow Issues

5.8.1 All fixtures shall be full cut off type.

5.9 Illumination Structure and Luminaire Identification

5.9.1 Each illumination structure and under bridge light shall be specifically identified by circuit number, ESC location and linear sequence in the circuit. Each ESC shall be abbreviated with two letters based on the nearest cross street to the service center. An example of the light structure number is: 1PV5 where “1” signifies circuit 1, “PV” represents the ESC is located at or near Pleasant Valley Road and “5” identifies this as the fifth light structure counted linearly from the ESC. Light pole numbering will always start from the ESC for each circuit. Under bridge lighting shall be included in the circuit numbering system. The engineers shall submit to the NTTA the list of services for approval prior to plans submittal.

5.9.2 Data Asset collection and management requires GPS coordinates, station/offset, type of light, mounting height, shaft length, base type,

base diameter, pole material, etc. All information shall be recorded by the Contractor and included as part of the record drawings. The data shall be recorded to both hard copy and electronic formats and submitted to the PMO group and the Maintenance Department's Infrastructure Manager.

Chapter 6 - Lighting Equipment and Materials

6.1 Introduction

6.1.1 This chapter covers the equipment that should be selected during design so as to match current NTTA inventory. Matching the equipment is important not only to facilitate quick repair but for overall consistency of appearance. The designer shall refer to the NTTA RID standards for further details.

6.2 Luminaires – Main Lane

6.2.1 Luminaires for main lane illumination shall be KIM luminaires, 400W HPS; 480V with IESNA Type AR3 distribution mounted a nominal 40 feet above finished grade. The luminaire shall have a Platinum Silver finish. A terminal board for conductor to luminaire connection and a 2" Horizontal Slip Fitter attachment are required. Approved equals may be used but must mount exactly the same as the KIM fixtures. Unless there is no other way to light the center of a particular roadway, center or median mounted fixtures shall not be used. Fixtures should be located off the shoulder of the roadway.

6.2.2 The first fixture closest to the ESC shall require a photocell and control wiring back to the ESC unless a Ramp pole fulfills the requirement for the pole top mounted photocell controlling the roadway lighting at the ESC. The photocell receptacle shall be ordered as an option on this particular fixture only to facilitate the mounting.

6.3 Luminaries – Ramps

6.3.1 Luminaires for ramps shall be identical to those specified for the main lanes except that ramp luminaires shall be 250W HPS with IESNA Type AR2 distribution mounted a nominal 40 feet above grade.

6.3.2 The first fixture closet to the ESC shall require a photocell and control wiring back to the ESC unless a Main Lane pole fulfills the requirement for the pole top mounted photocell controlling the roadway lighting at the ESC. The photocell receptacle shall be ordered as an option on this particular fixture only to facilitate the mounting.

6.4 Luminaires – High Mast

6.4.1 If selected and approved by the NTTA project manager, the design for the high mast lighting shall be for 100 MPH wind loads and in accordance with the *TxDOT Tollway Illumination Manual*, TxDOT HMID, HMIP, HMIF standard drawings, TxDOT standard specifications and

NTTA General Notes. Luminaires shall be per TxDOT standards. High Mast lighting requires a 480 volt single phase dedicated circuit. These fixtures should only be used at major interchanges with no residential housing in close proximity allowing for an individual to establish a line of site with the fixtures. These illumination structures will require City approval prior to starting the design even if NTTA project managers approve the use. All municipalities adjoining the Tollway roadway will have the final say within their geographic boundaries.

6.5 Poles

6.5.1 All illumination structures shall be steel.

6.5.2 Pole shafts shall be manufactured in even 5 foot increments using common base plate and anchor bolt dimensions as shown in the NTTA standards. The pole diameter at the bottom of the pole shaft may change to accommodate the common base plate dimensions; the diameter at the top of the pole shaft shall remain constant to ensure proper fitting with the davit arm.

6.5.3 All pole davit arms shall have a rise of 6'-6" for a steel pole. The davit arms shall have a 4'-0" radius and have a 6', 8', 10' or 12' length in order to place the fixture head as close as possible to the center of the shoulder to permit maintenance without closing a lane. This may require the use of a different IESNA type distribution pattern as directed above. If other than the directed patterns are used, insure photometrics are still within guidelines.

6.5.4 Breakaway transformer bases shall be used on illumination structures where required.

6.5.5 The longitudinal spacing between poles will be established during the design procedure. Appurtenances along the Tollway and Tollway geometrics influence the final luminaire support location. The designer shall use the following recommendations:

6.5.6 To avoid being struck, illumination and ITS structures in the area between main lanes and exit ramps should not be located within 50 ft. of the physical gore.

6.5.7 Illumination structures should be located no closer than 30 feet to non-lighted sign structures or DMS installations and coordinated with CCTV locations.

6.5.8 The clear zone is provided along roadways to allow vehicles veering off the travel lane an opportunity for safe recovery or stopping. The clear zone width (always-measured form the edge of the travel lane) depends on several factors, including:

6.5.9 Whether the surrounding area is rural or urban. The functional classification of the roadway, the design speed of the roadway, and the average daily traffic volume.

6.6 Shoulder vs. Median mounting:

6.6.1 Shoulder mounting refers to the placement of luminaries between the curb and right-of way line, along the roadway shoulder or on concrete traffic rail.

6.6.2 *Median mounting refers to placement in open medians or on* concrete traffic barrier. The NTTA is reducing drive time by requiring maintenance be performed on illumination structures without lane closures. Median mounting of illumination structures is not an acceptable option and will be rejected unless a written explanation is included with the plan reviews detailing why there is no other suitable means to illuminate any portion of the roadway.

6.7 Two types of poles

6.7.1 There are two types of poles used for conventional lighting: Non-breakaway and Breakaway. Non-breakaway poles are rigidly mounted, usually remaining upright when hit by a vehicle. Breakaway poles are designed so the base will shear easily on impact.

6.8 Breakaway Poles

6.8.1 Breakaway poles should be used in areas where it is necessary to place an illumination structure near a roadway and the surrounding area does not permit protection by distance or barrier.

6.8.2 Breakaway poles are not normally used if: Substantial pedestrian traffic is a consideration in the area. A falling pole could be more hazardous to pedestrians than to the vehicle passengers involved by an automobile striking a rigid pole. Non-breakaway poles should also be used if overhead electric lines are too close.

6.8.3 It is desirable to have the side slope 6:1 or flatter prior to the breakaway base. This is to ensure the vehicle will impact the base at an acceptable height which will allow the base to fail in shear as intended, versus in bending. In addition, the height above ground for any portion of the anchor bolts or foundation should not exceed 4 inches. This is to prevent the bottom of a vehicle from snagging the foundation or base.

6.9 Non-Breakaway Poles

6.9.1 Generally, non-breakaway roadway illumination poles may be used on the shoulder side of roadways when placed outside of the clear zone or inside the clear zone when protected from impact.

6.9.2 Non-breakaway poles should be placed as close to the right-of way line as lighting design and practicality permits. Wherever possible, non-breakaway poles should be placed among other non-yielding structures' to minimize the hazard. Poles should typically be placed 15 to 20 feet from lane edge.

6.9.3 The pole is mounted atop a concrete traffic barrier.

6.9.4 The pole is mounted behind a metal beam guard fence.

6.10 Aluminum Light Poles

6.10.1 Aluminum light poles shall only be used for replacement of an existing lighting system and only when the pole cannot be moved off of the roadway or the existing structure cannot support a steel replacement pole.

6.11 Electrical Conduit

6.11.1 All conduits shall be UL listed in conformity to the NEC.

6.12 Galvanized Rigid Steel Conduit:

6.12.1 Galvanized rigid steel (GRS) conduit shall be used for all above grade, surface mounted conduit runs. The conduit shall be galvanized on both the inside and outside surfaces.

6.13 PVC Coated Galvanized Rigid Steel Conduit:

6.13.1 PVC coated GRS shall be used for all underground conduit bends and stubs-ups. The conduit shall be zinc coated rigid steel utilizing a 40 mil PVC coating externally and a 2 mil urethane coating internally, and restricted for use with threaded fittings only. The exterior and interior coatings shall be installed as an integral part of the conduit manufacturing process. No substitutions allowed.

6.14 Liquid-Tight Flexible Metal Conduit

6.14.1 Liquid tight flexible metal conduits (LTFMC) shall be used for all final connections and miscellaneous locations where required, such as a conduit run from a bridge deck to bridge bent.

6.14.2 Liquid-tight flexible metal conduit shall be constructed of a flexible galvanized continuous steel core covered with an extruded PVC jacket and limited to 6' in length.

6.15 Rigid Non-metallic Conduit

6.15.1 Rigid non-metallic conduit shall be used for all underground conduit runs. The conduit shall be rigid polyvinyl chloride, Schedule 40, of the sizes indicated on the Plans and shall conform to the NEMA standards. Conduit, fittings, cement, and cleaner shall be produced by the same manufacturer. Rigid non-metallic conduit shall not be used for runs above ground. PVC coated GRS shall be used for all conduit bends and stub-ups.

6.15.2 Rigid steel conduit ends shall be cut square, threaded and reamed to remove burrs and sharp edges. Field threads shall be of the same type and have the same effective length as factory cut threads.

6.15.3 Conduit shall be installed so as to be continuous and watertight between boxes or components. During installation, conduits shall be protected at all times from the entrance of water and other foreign matter by being capped or well plugged overnight and at other times when the work is temporarily suspended. All conduits vertically stubbed at grade shall have a 2" projection to prevent water flowing into the conduit.

6.15.4 All conduits shall be installed so they will drain properly and drainage tees shall be provided at low points, where required.

6.15.5 Conduit runs shall be made with as few couplings as standard lengths will permit, and the total angle of all bends between any two pull points shall not exceed 360°. The minimum radius of pipe bends shall not be less than those shown in the NEC.

6.15.6 Pull boxes shall be used wherever necessary to facilitate the installation of the conductors. Bushings shall be used on all conduits per NEC.

6.15.7 Exposed conduit runs shall be straight and parallel or at right angles to the general structure lines.

6.15.8 Attachments to concrete shall be held with galvanized bolts.

6.15.9 Underground conduits shall have a minimum 12" horizontal spacing between ITS MPE feeders and any other power or lighting conductors located within the same trench.

6.16 HDPE Conduit

6.16.1 Any required conduits under existing pavement shall be HDPE and bored by horizontal directional drilling. Conduits and conduit sleeves installed under new pavement or bored under existing pavement shall be extended to a point three (3) feet beyond the shoulder edge, or back of the curb, and turned up into an accessible junction box and capped. A ¼" nylon pull cord will be installed in each empty conduit run. The location of each conduit crossing shall be marked at the edge of the pavement by a surveyor's pin and noted on the as-built drawings. Conduit sleeves will be located by GPS coordinates and noted by station and offset.

6.16.2 HDPE conduit shall only be used in a boring situation where trenching is not feasible or cost effective. Fittings shall be installed by submitted and approved heat fusion joint methods or conduit adhesive. Both installations must be per the manufacturer's instructions. Conduit adhesive shall be of the type specified currently as BonDuit™ or approved equal.

6.17 Conduit Placement

6.17.1 Conduit shall be installed so as to be continuous and watertight between boxes or components. During installation, conduits shall be protected at all times from the entrance of water and other foreign matter by being capped or well plugged overnight and at other times when the work is temporarily suspended. All conduits vertically stubbed at grade shall have a 2" projection to prevent water flowing into the conduit.

6.17.2 All conduits shall be installed so they will drain properly and drainage tees shall be provided at low points, where required.

6.17.3 Conduit runs shall be made with as few couplings as standard lengths will permit, and the total angle of all bends between any two pull points shall not exceed 360°. The minimum radius of pipe bends shall not be less than those shown in the NEC.

6.17.4 Pull boxes shall be used wherever necessary to facilitate the installation of the conductors. Bushings shall be used on all conduits per NEC.

6.17.5 Exposed conduit runs shall be straight and parallel or at right angles to the general structure lines.

6.17.6 Attachments to concrete shall be held with galvanized bolts.

6.17.7 Underground conduits shall have a minimum 12” horizontal spacing between ITS MPE feeders and any other power or lighting conductors located within the same trench.

6.17.8 Conduits for poles located in the median and mounted to precast concrete barrier, either CTB or SSCB, will be PVC Schedule 40 and buried 24” below grade terminating 2” above the poured pole foundation section. All bends and stub ups shall be PVC coated galvanized rigid steel conduit.

6.17.9 Conduits for poles located in the median and mounted to slipped in place concrete barrier, either CTB or SSCB, shall be Galvanized Rigid Steel and located within 8” of the barrier base. These installations may terminate at a malleable iron junction box located within the barrier, or directly inside the pole, depending on the number of conduits. (No more than 2 – 2” conduits are acceptable at each pole foundation.) If the barrier placed junction box method is chosen, a 1” GRS conduit shall be installed between the barrier junction box and the pole base, terminating 2” above the poured pole foundation section. All bends and stub ups encased in concrete shall be galvanized rigid steel conduit.

Chapter 7 – Bridge Electrical Systems Design

7.1 Introduction

7.1.1 The ultimate purpose of this chapter will be to specify and detail exact electrical system design for bridges over 1000 feet in length.

7.1.2 This chapter covers the types of luminaires used for the illumination of elevated structures and their associated appurtenances. (Rails, barriers and the various types of walls.)

7.1.3 The illumination design shall be in accordance with the Illuminating Engineering Society/American National Standard Practice for Roadway Lighting, (IES/ANSI RP-8) and the TxDOT Highway Illumination Manual. The illumination design shall use, in order of importance, any Inter-Local Agreement, NTTA plans and standards, NTTA special provisions, NTTA general notes, NTTA special specifications, and TxDOT standard specifications.

7.2 Placement of Illumination Structures

7.2.1 Layout of roadway illumination structures shall be staggered and spaced equally between both sides of the bridge if necessity calls for the bridge to be illuminated from both sides of the roadway**.**

7.3 Illumination Circuits

7.3.1 Lighting structures will be supplied along the side of each bridge by two circuits. If more than one side of the bridge is required to be illuminated due to required illumination levels, two more circuits will be supplied to the opposite side of the bridge. In both cases the reason for the two circuits each is to supply power to alternate light structures**.**

7.4 Illumination Structures attached to Bridges and other Structures

7.4.1 Provide 2” diameter rigid metal conduit, and malleable iron junction boxes in the bridge single slope rails or single slope median barrier. The conduit will terminate in TxDOT Type D ground boxes with aprons outside of the bridge limits.

7.4.2 Provide 2” diameter rigid metal conduit and malleable iron junction boxes in the single slope rails on retaining walls. The conduit will terminate in TxDOT Type D ground boxes with aprons at the beginning and end of the retaining wall.

7.5 **Luminaires**

7.5.1 Bridge, Overpass and other Structures: Shall be KIM luminaires, 400W HPS, 480V with IESNA Type AR3 distribution mounted a nominal 40 feet above finished grade. The luminaire shall have a Platinum Silver finish. A terminal board for conductor to luminaire connection and a 2" Horizontal Slip Fitter attachment are required. Approved equals may be used but must mount exactly the same as the KIM fixtures.

7.5.2 Underpass: Shall be KIM luminaires, 250W HPS, 480V with IESNA Type AR3 distribution. The luminaire shall have a Platinum Silver finish. A terminal board for conductor to luminaire connection and a 2" Horizontal Slip Fitter attachment are required. Approved equals may be used but must mount exactly the same as the KIM fixtures. Underpass lighting shall be fed from the regular illumination circuit through a ground box located near the bridge. The illumination circuit shall be tapped at this ground box and run to a 30A, fused switch mounted on the bridge. A 1" conduit shall be run from the disconnect to the underpass luminaires. The luminaire shall be mounted with a 2" diameter mast arm typically 2 feet in length. See NTTA standards

7.5.3 Under Bridge: Shall be KIM luminaires, 250W HPS, 480V with IESNA Type AR3 distribution. The luminaire shall have a Platinum Silver finish. A terminal board for conductor to luminaire connection and a 2" Horizontal Slip Fitter attachment are required. Approved equals may be used but must mount exactly the same as the KIM fixtures.

Chapter 8 - Calculating Voltage Drop

8.1 Introduction

This chapter explains voltage drop and how to calculate it for roadway illumination branch circuits. Voltage drop can be calculated manually, using the methods described in this section or automatically using spreadsheets.

8.2 Maximum Allowable Voltage Drop

8.2.1 Typical service line voltage for illumination is 480 VAC. However, since copper wire has some amount of resistance, a voltage drop (or loss) will occur in the wire itself. This energy is lost in the form of heating in the wire.

8.2.2 Magnetic regulator ballasts for HPS of the type specified for roadway illumination (and shown on Roadway Illumination Details) will operate properly at 10 percent under rated line voltage. (This is not true for all electrical equipment. For equipment other than roadway illumination, see the equipment manufacturer's documentation.) Good design practice allows the utility company 2 percent variation from rated line voltage, leaving 5 percent available for voltage drop in branch circuits. Therefore, the maximum allowable voltage drop for a 480 volt circuit would be 24 volts, derived as follows:

480 V x 0.05 = 24 V maximum allowable voltage drop.

8.3 Formula

Voltage (*V*) is equal to current (*I*) times resistance (*R*), expressed as

$$V = I \times R$$

Therefore, voltage drop (*Vd*) in any given run may be calculated as

$$Vd = \text{Current in the Run (amps)} \times \text{Conductor resistance (ohms per meter or ft.)} \times \text{Length of the run (meters or ft.)}$$

Discussions of each of the factors in this formula follow.

8.4 Current in the Run

When calculating voltage drop manually, the designer must determine the current in each run (that is, from the last light pole to the next-to-last, etc., all the way back to the service pole). The current depends on the number and type of fixtures. The following table shows the current required for the various types of fixtures.

Design amperes for Various Luminaires

Lamp Wattage and Type*	- Line Voltage -		
	120 V	**240 V**	**480 V**
150 W HPS	1.6 A	0.8 A	0.4 A
250 W HPS	2.6 A	1.3 A	0.65 A
400 W HPS	3.9 A	2.0 A	1.0 A

* HPS = High Pressure Sodium

Note: The amperage shown for HPS fixtures is for magnetic regulator type ballasts only. If other types of ballasts are used, refer to the manufacturer's specifications.

8.5 Conductor Resistance

8.5.1 To calculate voltage drop, you need to know the resistance of the conductor (wire) used in the branch circuit. Resistance is a function of wire size and length. Resistance for both wires going to the luminaire must be considered.

8.5.2 The following table shows wire resistance for various American Wire gauge (AWG). Since both wires are the same size in typical circuits, the table shows “loop resistance”; thus the designer need only calculate the distance between luminaire poles.

Wire Resistance by Gauge

Resistance	Conductor Resistance			
Wiresize		# of Conductors		
	Ohms/ft	2	3	4
14				
12	0.002010	0.004020	0.006030	0.008040
10	0.001260	0.002520	0.003780	0.005040
8	0.000786	0.001572	0.002358	0.003144
6	0.000510	0.001020	0.001530	0.002040
4	0.000321	0.000642	0.000963	0.001284
3	0.000254	0.000508	0.000762	0.001016
2	0.000201	0.000402	0.000603	0.000804
1	0.000160	0.000320	0.000480	0.000640
1/0	0.000127	0.000254	0.000381	0.000508
2/0	0.000101	0.000202	0.000303	0.000404
3/0	0.000080	0.000160	0.000240	0.000320
4/0	0.000063	0.000126	0.000189	0.000252
250	0.000053	0.000106	0.000159	0.000212
300	0.000045	0.000090	0.000135	0.000180
350	0.000038	0.000076	0.000114	0.000152
400	0.000033	0.000066	0.000099	0.000132
500	0.000026	0.000052	0.000078	0.000104

8.5.3 Larger wire sizes have lower resistances. Using larger wire is one way to reduce the voltage drop in the circuit. If conductors larger than 4 gauge wire are required, the designer shall tap the conductor in a TxDOT Type D ground box to a smaller size conductor to feed the load. The conductor shall not be smaller than the circuit breaker protecting it.

8.6 Length of Run

When using the preceding table to obtain conductor resistance per meter or foot, the "length of the run" used in the voltage drop formula will simply be the one-way distance between the poles.

Because of the way luminaries are wired, the height of the pole is of no consequence in voltage drop calculations. Only at the last pole would the height be a factor, and then only if the pole were very tall (high mast, for instance).

8.7 Calculation Example

On a 480 volt branch circuit, the run from the source to the last light pole is 200 feet. The twin-arm light pole supports two 400 watt HPS fixtures. The conductor is 4 gauge wire.

Using data from the tables provided in this section, we obtain the following information:

- Current in the run = 2 x 1.0 amps or 2.0 amps
- Loop resistance of the conductor = 0.000642Ω/ft. x 200 ft.

Using the formula for calculating voltage drop, we find

Vd = 2.0 amps x 0.000642 Ω/ft. x 200 ft.

therefore

Vd = 0.257 volts.

8.8 Total Voltage Drop

Each run of the branch circuit will have a voltage drop. Therefore, as you work toward the electrical service, the total voltage dropped in the wiring increases as the drop for each successive run is added. This total must not exceed 3 percent at the pole farthest from the electrical service. The 3 percent is based on a mag-reg ballast that operates at plus-or-minus 10 percent line voltage. The allowable voltage drop should be adjusted to accommodate the specific ballast used.

ITS LEGEND

- GROUND BOX (TY FO) W/APRON
- GROUND BOX (TY D) W/APRON
- JUNCTION BOX (STRUCTURE MOUNTED)
- CCTV
- DMS W/AVITTS
- AVITTS
- CONDUIT (BORED)
- MULTIDUCT CONDUIT (PVC) (SCH 40) (4-1.25" HDPE INDT)
- MULTIDUCT CONDUIT (PVC) (SCH 40) (4-1.25" HDPE INDT)
- MULTIDUCT CONDUIT (FIBERGLASS) (4-1.25" HDPE INDT)
- MULTIDUCT CONDUIT (PVC) (SCH 40) (2")
- C## CONDUIT RUN NUMBER (FIBER OPTIC)
- ELECTRICAL SERVICE CENTER TYPE MPE
- CH COMMUNICATIONS HUT
- TRAFFIC ARROW

ELECTRICAL LEGEND

- GROUND BOX (TY D) W/APRON
- JUNCTION BOX, ABOVE GRADE
- #XX## LIGHT POLE IDENTIFICATION NUMBER
- UB (0.25 KW)S
- DISCONNECT SWITCH
- (TYAL40T-8) (0.25 KW)S
- (TYSP40S-8) (0.25 KW)S
- (TYAL40T-12) (0.40 KW)S
- (TYSP40S-12) (0.40 KW)S
- FUTURE LIGHT POLE
- ELECTRICAL SERVICE CENTER TYPE S
- E## CONDUIT RUN NUMBER (SEE SCHED)
- XHHW-2 CU IN CONDUIT (SEE SCHED)
- CONDUIT UNDER ROAD
- CANTILEVER OVERHEAD SIGN STRUCTURE (COSS)
- OVERHEAD SIGN BRIDGE (OSB)
- HIGH MAST ILLUMINATION POLE (150 FT)(100 MPH)
- EXISTING HIGH MAST (TO REMAIN IN PLACE)

ELECTRICAL SHEET SUMMARY TOTALS

ITEM NO.	DESC.	ITEM DESCRIPTION	UNIT	TOTAL
0618	2018	CONDUIT (PVC) (SCHD 40) (2")	LF	54707
0618	2022	CONDUIT (PVC) (SCHD 40) (3")	LF	1285
0620	2009	ELEC CONDR (NO. 6) BARE	LF	49262
0620	2013	ELEC CONDR (NO. 10) BARE	LF	6730
0620	2004	ELEC CONDR (NO. 2) INSULATED	LF	95954
0620	2006	ELEC CONDR (NO. 3/0) INSULATED	LF	2570
0620	2008	ELEC CONDR (NO. 4) INSULATED	LF	13460
0624	2014	GROUND BOX TY D (162922) W/APRON	EA	98
0628	7010	ELEC SRV TY S (480V) 400A (SS) PS (U)	EA	4
0628	7011	ELEC SRV TY S/E (480V) 400A (SS) PS (U)	EA	4
0858	7002	RAMP TOLL GANTRY (24")	EA	4
0858	7001	MAINLANE TOLL GANTRY	LS	0

ITS SHEET SUMMARY TOTALS

ITEM NO.	DESC.	ITEM DESCRIPTION	UNIT	TOTAL
0416	7001	DRILL SHAFT (DMS MTS)(48 IN)	LF	0
0416	7002	DRILL SHAFT (CCTV MTS)(36 IN)	LF	0
0416	7003	DRILL SHAFT (CCTV MTS)(42 IN)	LF	0
0416	7005	DRILL SHAFT (CCTV MTS) (48 IN)	LF	45
0425	7002	PRESTR CONC CAMERA POLE (40')	EA	3
0425	7003	PRESTR CONC CAMERA POLE (60')	EA	0
0425	7004	PRESTR CONC CAMERA POLE (50')	EA	0
0624	7001	GROUND BOX TY FO (484860) W/APRON	EA	31
0628	7006	ELEC SRV TY MPE (120/240) 5KVA (SS) PS (U)	EA	4
0628	7007	ELC SRV TY MPE (120/240) 10KVA (SS) PS (U)	EA	1
0628	7008	ELEC SRV TY MPE (120/240) 15KVA (SS) PS (U)	EA	1
0650	7004	INS OH SN SUP (40 FT CANT) (DMS)	EA	1
0852	7002	COMMUNICATIONS HUT (101208)	EA	1
0860	7001	MULTIDUCT CONDUIT (PVC) (4-1.25" DUCT)	LF	11279
0860	7002	MULTIDUCT CONDUIT (RM) (4-1.25" DUCT)	LF	585
0860	7003	MULTIDUCT CONDUIT (FIBERGLASS) (4-1.25" DUCT)	LF	4143
0860	7004	MULTIDUCT CONDUIT (PVC) (3-1.25" DUCT)	LF	0
0860	7005	MULTIDUCT CONDUIT (RM) (3-1.25" DUCT)	LF	0
0860	7006	MULTIDUCT CONDUIT (FIBERGLASS) (3-1.25" DUCT)	LF	0
0860	7007	MULTIDUCT CONDUIT (3-1.25" DUCT)	LF	0
0860	7008	MULTIDUCT CONDUIT (4-1.25" DUCT)	LF	0

NO.	DATE	REVISION	APPROV.

CORRIDOR NAME

NTTA®
NORTH TEXAS TOLLWAY AUTHORITY

TOTALS SUMMARY AND LEGENDS

SHEET 1 OF 29

COMPANY LOGO | SECTION

DRAWN CAS DATE 02/08 | DESIGNED RDW DATE 02/08
CHECKED RDW DATE 02/08 | SCALE NONE

CONTRACT NO. XXXXX-XXX-XX-XX-XX SHEET ___ OF ___

8:04:17 AM

$$$REFLOG$$$10
$$$REFLOG$$$08
$$$REFLOG$$$06
$$$REFLOG$$$04
$$$REFLOG$$$02
$$$REFLOG$$$09
$$$REFLOG$$$07
$$$REFLOG$$$05
$$$REFLOG$$$03
$$$REFLOG$$$01
rkinyua
1.0000 ft / IN.
7/2/2008 8:04:17 AM
\\dalw00\projects\42436\Maintenance\RESM\B28BRESM00.dgn

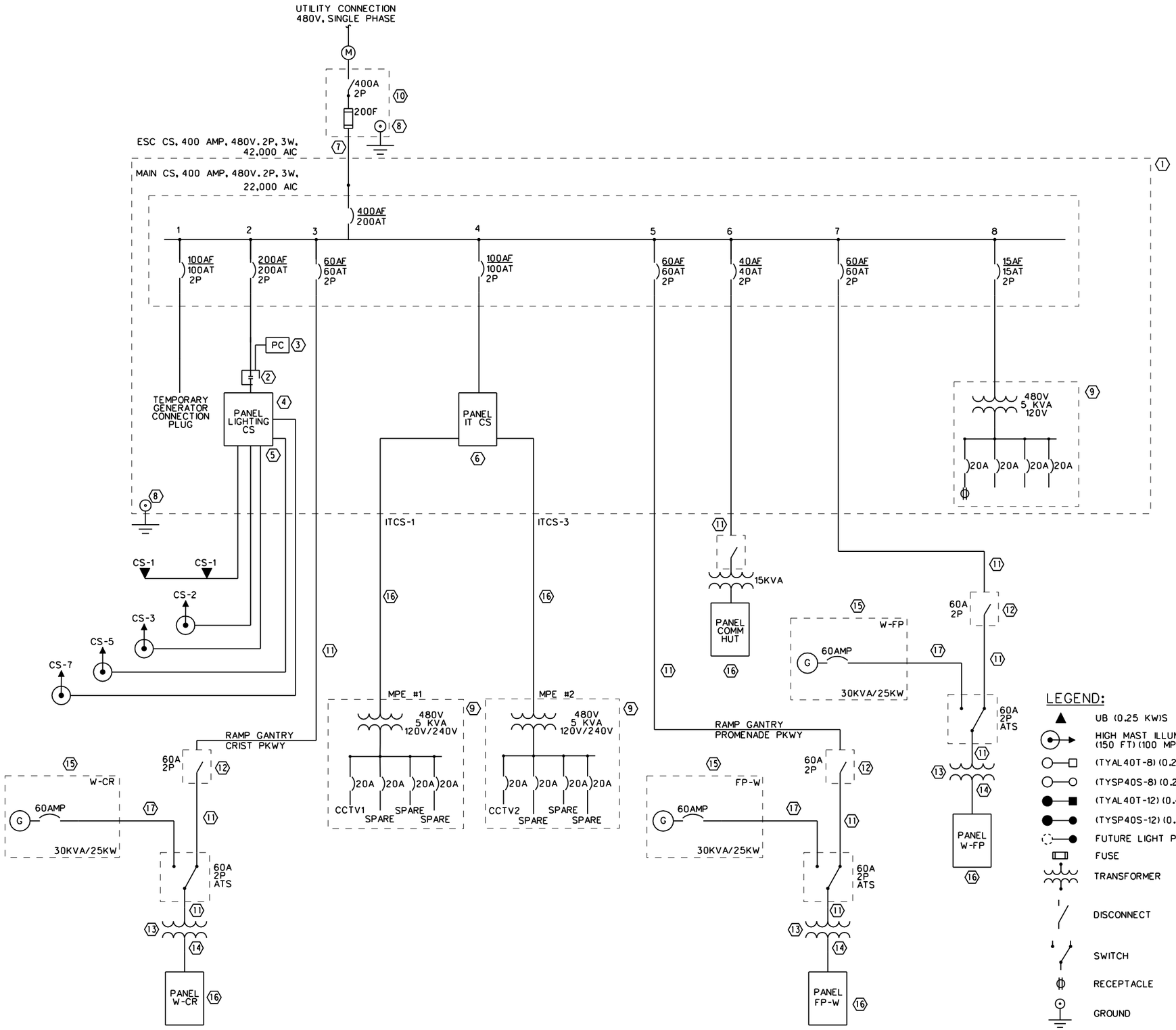

NOTES:

1. STAINLESS STEEL ENCLOSURE 12 GAUGE 133 STAINLESS STEEL GASKETED, LOCKABLE DOORS. NEMA 3R WITH SIDE VENTS ONE HIGH AND ONE LOW.
2. 100A LIGHTING CONTACT WITH HOA SWITCH ON 100 AMP CONTACTOR IN A NEMA 1 ENCLOSURE.
3. PHOTOELECTRIC CONTROL TO BE MOUNTED ON ROADWAY LIGHT FIXTURE CLOSEST TO ESC WITH CONTROL WIRES BACK TO ESC.
4. LIGHTING PANEL BOARD - SEE SHEET OF FOR REQUIREMENTS WITH IS A CHANGE TO THE ESC STANDARD.
5. ROADWAY ILLUMINATION FEEDER CONDUITS AND CONDUCTORS TO GROUND BOXES. REFER TO ILLUMINATION PLANS.
6. ITS PANEL BOARD - SEE SHEET OF FOR REQUIREMENTS, WITH IS A CHANGE TO THE ESC STANDARD.
7. 3"C WITH 2#3/0, #6 GROUND WITH A SPARE 3"C.
8. 20' GROUND LOOP IN FOUNDATION PER NEC 250.52(3).
9. SIZE OF MINIPOWER ZONE W/CIRCUITS AS SHOWN AND PANEL SCHEDULE TO MEET REQUIREMENTS. THIS IS A CHANGE TO THE STANDARD DRAWINGS.
10. 400 AMP FUSED SWITCH IN A 12 GAUGE 133 STAINLESS STEEL GASKETED LOCKABLE DOOR NEMA 3R ENCLOSURE.
11. SEE PANEL SCHEDULES.
12. 60 AMP 2 POLE NEMA 3R SAFETY SWITCH.
13. TRANSFORMER SHALL BE A 25 KVA, 480-120/240 V, NEMA 3R.
14. 3"C WITH 3 # 2/0, 1#1G.
15. GENERATOR NOT IN CONTRACT WILL BE PROVIDED AT A LATER DATE.
16. SEE PANEL SCHEDULE FOR REQUIREMENTS.
17. PROVIDE AND INSTALL 2" CONDUIT FROM FUTURE GENERATOR TO ATS.

LEGEND:

- UB (0.25 KW)S
- HIGH MAST ILLUMINATION POLE (150 FT) (100 MPH)
- (TYAL40T-8) (0.25 KW)S
- (TYSP40S-8) (0.25 KW)S
- (TYAL40T-12) (0.40 KW)S
- (TYSP40S-12) (0.40 KW)S
- FUTURE LIGHT POLE
- FUSE
- TRANSFORMER
- DISCONNECT
- SWITCH
- RECEPTACLE
- GROUND

NO.	DATE	REVISION	APPROV.

CORRIDOR NAME

NTTA® NORTH TEXAS TOLLWAY AUTHORITY

ONE-LINE DIAGRAM ESC CS

SHEET 2 OF 19

COMPANY LOGO | SECTION

DRAWN CAS DATE 02/08 | DESIGNED RDW DATE 02/08
CHECKED RDW DATE 02/08 | SCALE NTS

CONTRACT NO. XXXXX-XXX-XX-XX-XX SHEET ___ OF ___

$$$REFLOG$$$10 ..... $$$REFLOG$$$09 .....
$$$REFLOG$$$08 ..... $$$REFLOG$$$07 .....
$$$REFLOG$$$06 ..... $$$REFLOG$$$05 .....
$$$REFLOG$$$04 ..... $$$REFLOG$$$03 .....
$$$REFLOG$$$02 ..... $$$REFLOG$$$01 .....

rkinyuo
1.0000 ft / IN.
7/2/2008 8:05:01 AM
\\dalw00\projects\42436\Maintenance\RESM\B28BRESM01.dgn

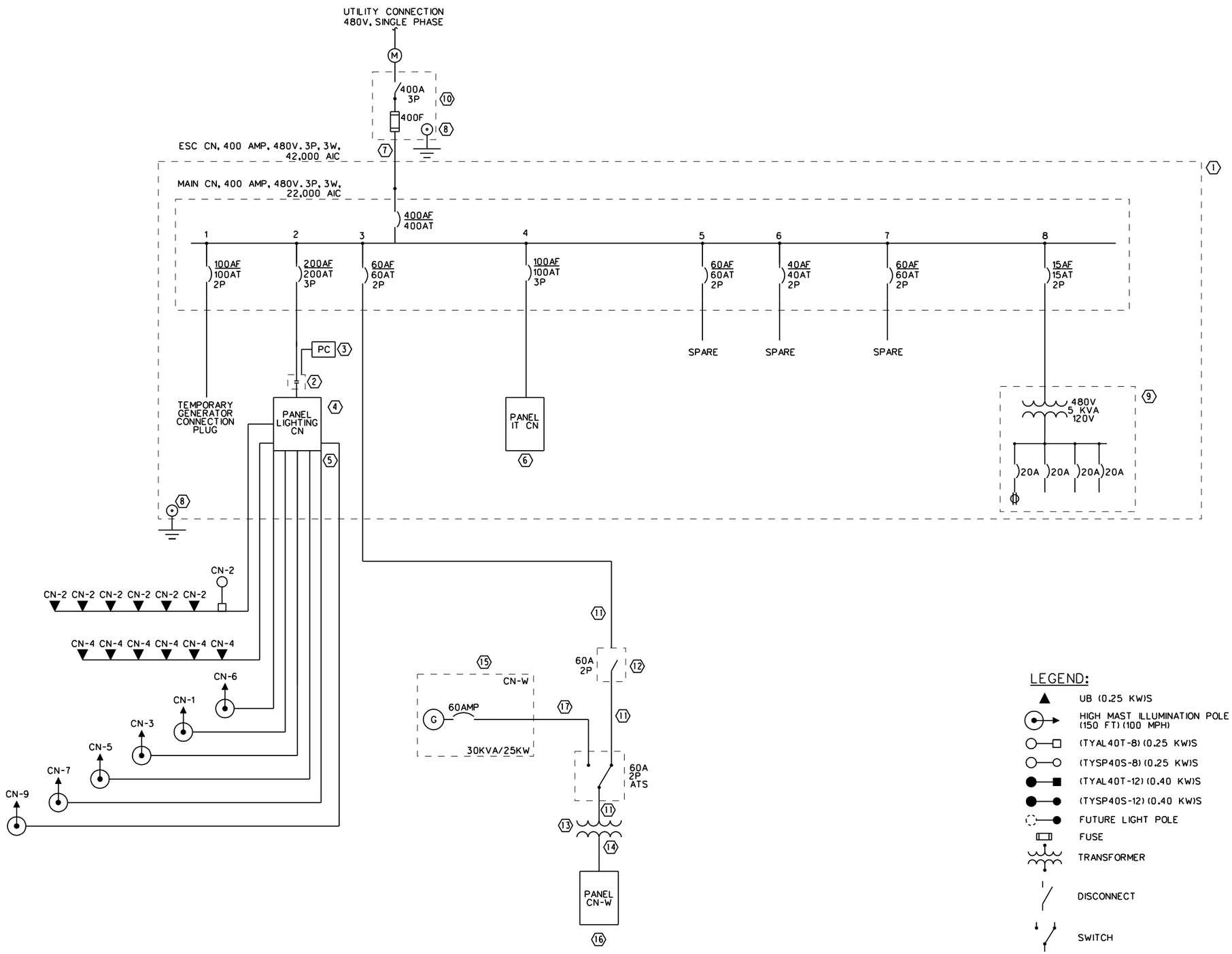

NOTES:

1. STAINLESS STEEL ENCLOSURE 12 GAUGE 133 STAINLESS STEEL GASKETED, LOCKABLE DOORS. NEMA 3R WITH SIDE VENTS ONE HIGH AND ONE LOW.
2. 100A LIGHTING CONTACT WITH HOA SWITCH ON 100 AMP CONTACTOR IN A NEMA 1 ENCLOSURE.
3. PHOTOELECTRIC CONTROL TO BE MOUNTED ON ROADWAY LIGHT FIXTURE CLOSEST TO ESC WITH CONTROL WIRES BACK TO ESC.
4. LIGHTING PANEL BOARD - SEE SHEET OF FOR REQUIREMENTS WITH IS A CHANGE TO THE ESC STANDARD.
5. ROADWAY ILLUMINATION FEEDER CONDUITS AND CONDUCTORS TO GROUND BOXES. REFER TO ILLUMINATION PLANS.
6. ITS PANEL BOARD - SEE SHEET OF FOR REQUIREMENTS, WITH IS A CHANGE TO THE ESC STANDARD.
7. 2 SETS OF 3"C EACH WITH 3#3/0, #6 GROUND WITH A SPARE 3"C.
8. 20' GROUND LOOP IN FOUNDATION PER NEC 250.52(3).
9. SIZE OF MINIPOWER ZONE W/CIRCUITS AS SHOWN AND PANEL SCHEDULE TO MEET REQUIREMENTS. THIS IS A CHANGE TO THE STANDARD DRAWINGS.
10. 400 AMP FUSED SWITCH IN A 12 GAUGE 133 STAINLESS STEEL GASKETED LOCKABLE DOOR NEMA 3R ENCLOSURE.
11. SEE PANEL SCHEDULE.
12. 60 AMP 2 POLE NEMA 3R SAFETY SWITCH.
13. TRANSFORMER SHALL BE A 25 KVA, 480-120/208V, NEMA 3R.
14. 3"C WITH 4 # 2/0, 1#1G.
15. GENERATOR NOT IN CONTRACT WILL BE PROVIDED AT A LATER DATE.
16. SEE PANEL SCHEDULE FOR REQUIREMENTS.
17. PROVIDE AND INSTALL 2" CONDUIT FROM FUTURE GENERATOR TO ATS.

LEGEND:

- UB (0.25 KW)S
- HIGH MAST ILLUMINATION POLE (150 FT) (100 MPH)
- (TYAL40T-8) (0.25 KW)S
- (TYSP40S-8) (0.25 KW)S
- (TYAL40T-12) (0.40 KW)S
- (TYSP40S-12) (0.40 KW)S
- FUTURE LIGHT POLE
- FUSE
- TRANSFORMER
- DISCONNECT
- SWITCH
- RECEPTACLE
- GROUND

NO.	DATE	REVISION	APPROV.

CORRIDOR NAME

NTTA®
NORTH TEXAS TOLLWAY AUTHORITY

ONE-LINE DIAGRAM
ESC CN

SHEET 3 OF 29

COMPANY LOGO | SECTION

DRAWN CAS DATE 02/08 | DESIGNED RDW DATE 02/08
CHECKED RDW DATE 02/08 | SCALE 1"= 100'

CONTRACT NO. XXXXX-XXX-XX-XX-XX SHEET ___ OF ___

8:05:27 AM

$$$REFLOG$$$10 ..... $$$REFLOG$$$08 ..... $$$REFLOG$$$06 ..... $$$REFLOG$$$04 ..... $$$REFLOG$$$02 .....
$$$REFLOG$$$09 ..... $$$REFLOG$$$07 ..... $$$REFLOG$$$05 ..... $$$REFLOG$$$03 ..... $$$REFLOG$$$01 .....
rkinyua
1.0000 ft / IN.
7/2/2008 8:05:27 AM
\\dalw00\projects\42436\Maintenance\RESM\B28BRESM02.dgn

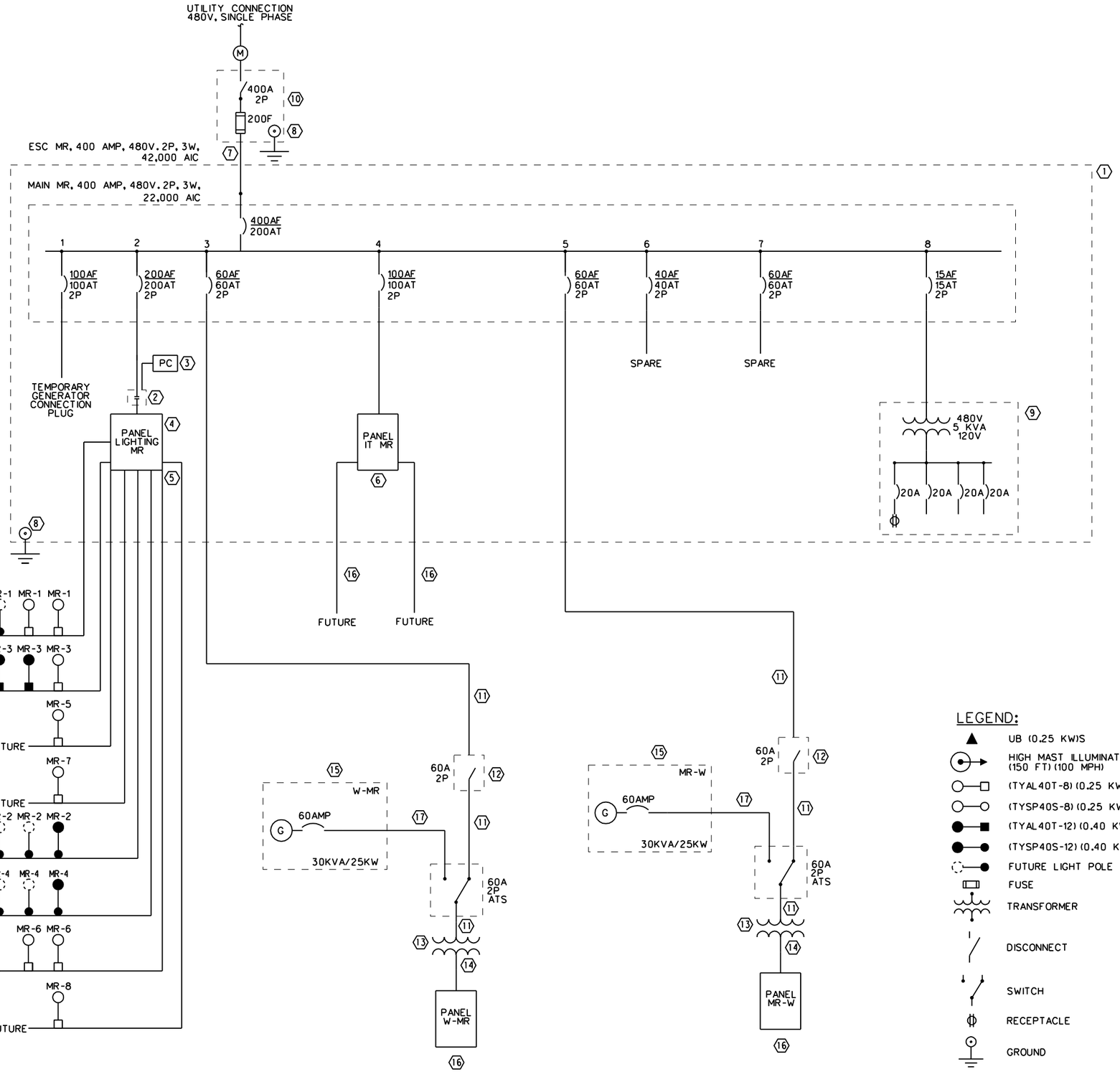

NOTES:

1. STAINLESS STEEL ENCLOSURE 12 GAUGE 133 STAINLESS STEEL GASKETED, LOCKABLE DOORS. NEMA 3R WITH SIDE VENTS ONE HIGH AND ONE LOW.
2. 200A LIGHTING CONTACT WITH HOA SWITCH ON 100 AMP CONTACTOR IN A NEMA 1 ENCLOSURE.
3. PHOTOELECTRIC CONTROL TO BE MOUNTED ON ROADWAY LIGHT FIXTURE CLOSEST TO ESC WITH CONTROL WIRES BACK TO ESC.
4. LIGHTING PANEL BOARD - SEE SHEET OF FOR REQUIREMENTS WITH IS A CHANGE TO THE ESC STANDARD.
5. ROADWAY ILLUMINATION FEEDER CONDUITS AND CONDUCTORS TO GROUND BOXES. REFER TO ILLUMINATION PLANS.
6. ITS PANEL BOARD - SEE SHEET OF FOR REQUIREMENTS, WITH IS A CHANGE TO THE ESC STANDARD.
7. 3"C WITH 2#3/0, #6 GROUND WITH A SPARE 3"C.
8. 20' GROUND LOOP IN FOUNDATION PER NEC 250.52(3).
9. SIZE OF MINIPOWER ZONE W/CIRCUITS AS SHOWN AND PANEL SCHEDULE TO MEET REQUIREMENTS. THIS IS A CHANGE TO THE STANDARD DRAWINGS.
10. 400 AMP FUSED SWITCH IN A 12 GAUGE 133 STAINLESS STEEL GASKETED LOCKABLE DOOR NEMA 3R ENCLOSURE.
11. SEE PANEL SCHEDULE.
12. 60 AMP 2 POLE NEMA 3R SAFETY SWITCH.
13. TRANSFORMER SHALL BE A 25 KVA, 480-120/240 V, NEMA 3R.
14. 3"C WITH 3 # 2/0, 1#1G.
15. GENERATOR NOT IN CONTRACT WILL BE PROVIDED AT A LATER DATE.
16. SEE PANEL SCHEDULE FOR REQUIREMENTS.
17. PROVIDE AND INSTALL 2" CONDUIT FROM FUTURE GENERATOR TO ATS.

LEGEND:

- UB (0.25 KW)S
- HIGH MAST ILLUMINATION POLE (150 FT) (100 MPH)
- (TYAL40T-8) (0.25 KW)S
- (TYSP40S-8) (0.25 KW)S
- (TYAL40T-12) (0.40 KW)S
- (TYSP40S-12) (0.40 KW)S
- FUTURE LIGHT POLE
- FUSE
- TRANSFORMER
- DISCONNECT
- SWITCH
- RECEPTACLE
- GROUND

NO.	DATE	REVISION	APPROV.

CORRIDOR NAME

NTTA® NORTH TEXAS TOLLWAY AUTHORITY

ONE-LINE DIAGRAM
ESC MR

SHEET 4 OF 29

COMPANY LOGO | SECTION

DRAWN CAS DATE 02/08 | DESIGNED RDW DATE 02/08
CHECKED RDW DATE 02/08 | SCALE 1"= 100'

CONTRACT NO. XXXXX-XXX-XX-XX-XX SHEET ___ OF ___

8:05:57 AM

$$$$REFLOG$$$$10 ..... $$$$REFLOG$$$$08 ..... $$$$REFLOG$$$$06 ..... $$$$REFLOG$$$$04 ..... $$$$REFLOG$$$$02 .....
$$$$REFLOG$$$$09 ..... $$$$REFLOG$$$$07 ..... $$$$REFLOG$$$$05 ..... $$$$REFLOG$$$$03 ..... $$$$REFLOG$$$$01 .....
rkinyua 1.0000 ft / IN. 7/2/2008 8:05:57 AM \\dalw00\projects\42436\Maintenance\RESM\B28BRESM03.dgn

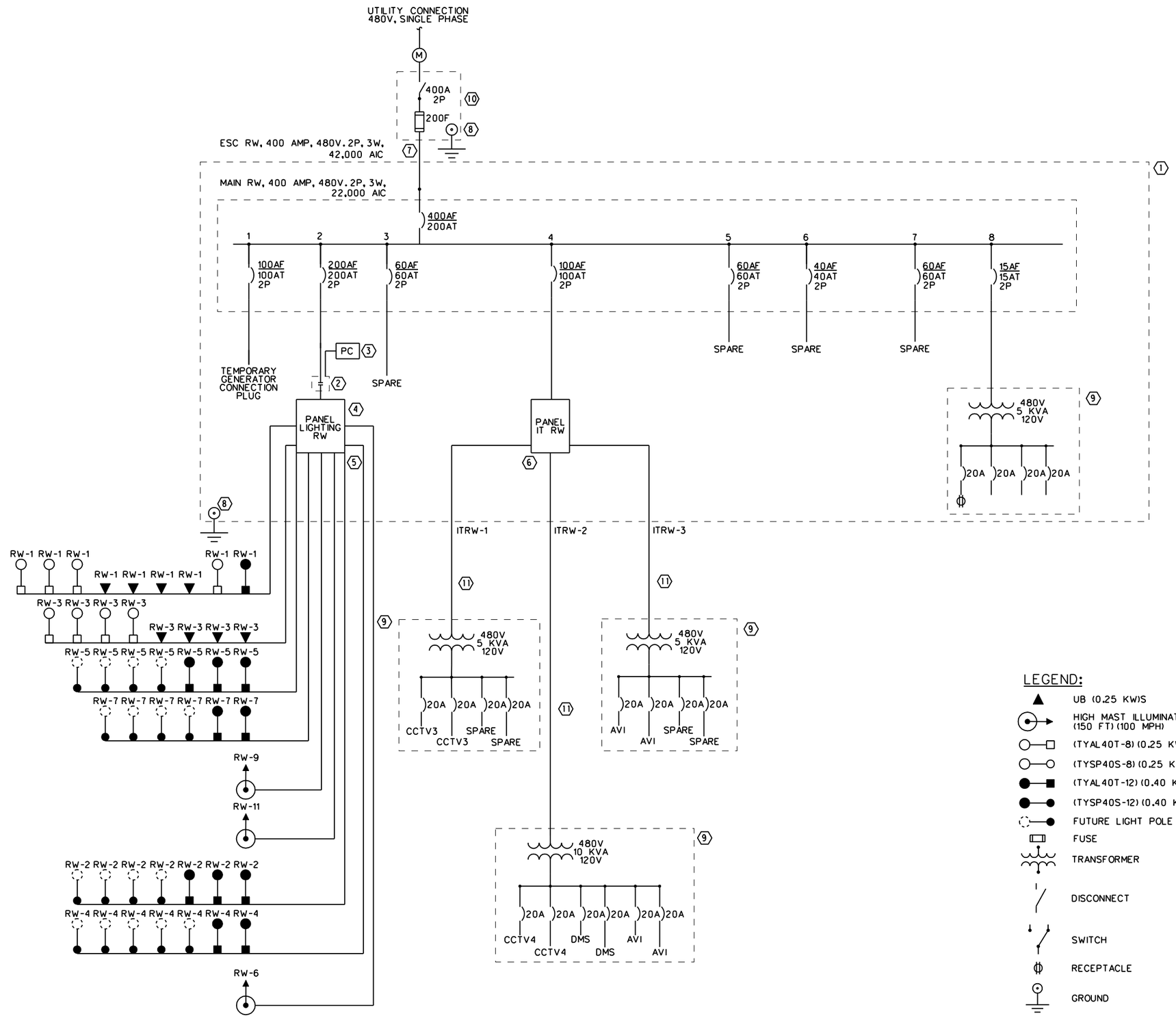

NOTES:

1. STAINLESS STEEL ENCLOSURE 12 GAUGE 133 STAINLESS STEEL GASKETED, LOCKABLE DOORS. NEMA 3R WITH SIDE VENTS ONE HIGH AND ONE LOW.
2. 200A LIGHTING CONTACT WITH HOA SWITCH ON 100 AMP CONTACTOR IN A NEMA 1 ENCLOSURE.
3. PHOTOELECTRIC CONTROL TO BE MOUNTED ON ROADWAY LIGHT FIXTURE CLOSEST TO ESC WITH CONTROL WIRES BACK TO ESC.
4. LIGHTING PANEL BOARD - SEE SHEET OF FOR REQUIREMENTS WITH IS A CHANGE TO THE ESC STANDARD.
5. ROADWAY ILLUMINATION FEEDER CONDUITS AND CONDUCTORS TO GROUND BOXES. REFER TO ILLUMINATION PLANS.
6. ITS PANEL BOARD - SEE SHEET OF FOR REQUIREMENTS, WITH IS A CHANGE TO THE ESC STANDARD.
7. 3"C WITH 2#3/0, #6 GROUND WITH A SPARE 3"C..
8. 20' GROUND LOOP IN FOUNDATION PER NEC 250.52(3).
9. SIZE OF MINIPOWER ZONE W/CIRCUITS AS SHOWN AND PANEL SCHEDULE TO MEET REQUIREMENTS. THIS IS A CHANGE TO THE STANDARD DRAWINGS.
10. 400 AMP FUSED SWITCH IN A 12 GAUGE 133 STAINLESS STEEL GASKETED LOCKABLE DOOR NEMA 3R ENCLOSURE.
11. SEE PANEL SCHEDULE.

LEGEND:

- UB (0.25 KW)S
- HIGH MAST ILLUMINATION POLE (150 FT) (100 MPH)
- (TYAL40T-8) (0.25 KW)S
- (TYSP40S-8) (0.25 KW)S
- (TYAL40T-12) (0.40 KW)S
- (TYSP40S-12) (0.40 KW)S
- FUTURE LIGHT POLE
- FUSE
- TRANSFORMER
- DISCONNECT
- SWITCH
- RECEPTACLE
- GROUND

NO.	DATE	REVISION	APPROV.

CORRIDOR NAME

NTTA®
NORTH TEXAS TOLLWAY AUTHORITY

ONE-LINE DIAGRAM ESC RW

SHEET 5 OF 29

COMPANY LOGO | SECTION

DRAWN CAS DATE 02/08 | DESIGNED RDW DATE 02/08
CHECKED RDW DATE 02/08 | SCALE 1"= 100'

CONTRACT NO. XXXXX-XXX-XX-XX-XX SHEET ___ OF ___

8:06:23 AM

$$$REFLOC$$$10
$$$REFLOC$$$08
$$$REFLOC$$$06
$$$REFLOC$$$04
$$$REFLOC$$$02
$$$REFLOC$$$09
$$$REFLOC$$$07
$$$REFLOC$$$05
$$$REFLOC$$$03
$$$REFLOC$$$01
rkinyua
1.0000 ft / IN.
7/2/2008 8:06:23 AM
\\dalw00\projects\42436\Maintenance\RESM\B28BRESM04.dgn

MAIN DISTRIBUTION PANEL

MAIN CN

DISTRIBUTION SYSTEM: NORMAL

LOCATION:

MAINS: 400A, 3 POLE MAIN CKT BRKR

VOLTAGE: 480/3Ø, 60 HZ

EQUIPMENT RATING: 25 KAIC SYMMETRICAL (RMS)
BREAKER RATING: STANDARD (80%)
MOUNTIING: INTERGRATED, NEMA-3R ENCLOSURE

CKT	LOAD DESCRIPTION	C/B & ACC	LOAD	WIRE & CONDUIT	PHASE	WIRE & CONDUIT	LOAD	C/B & ACC	LOAD DESCRIPTION	CKT
1	GENERATOR BREAKER	100/3	0	3#1, #8 GND, 1-1/4"C	A	3#3/0, #6 GND, 2"C	10375	200/3	LIGHTING ON	13
			0		B		9800			
			0		C		9575			
2	ETC GANTRY	60/3	7470	3#2, #8 GND, 1-1/4"C	A	3#1, #8 GND, 1-1/4"C	0	100/3	IT CN	14
			5440		B		0			
			5570		C		0			
3	SPARE	60/3	0		A		0	60/3	SPARE	15
			0		B		0			
			0		C		0			
4	SPARE	60/3	0		A	2#12, #12 GND, 3/4"C	0	15/2	MINPOWER ENCLOSURE 5 KVA	16
			0		B		0			
			0		C		0			
5			0		A		0			17
			0		B		0			
			0		C		0			
6			0		A		0			18
			0		B		0			
			0		C		0			
7			0		A		0			19
			0		B		0			
			0		C		0			
8			0		A		0			20
			0		B		0			
			0		C		0			
9			0		A		0			21
			0		B		0			
			0		C		0			
10			0		A		0			22
			0		B		0			
			0		C		0			
11			0		A		0			23
			0		B		0			
			0		C		0			
12			0		A		0			24
			0		B		0			
			0		C		0			

CKT BREAKER ACCESSORIES:

- E: ELECTRICITY OPERATED
- G: GFCI (5MA TRIP)
- GP: GROUND FAULT PROTECTION
- H: HACR-RATED BREAKER
- L: LOCKING HANDLE
- M: MOTOR OPERATOR
- S: SHUNT-TRIP

CONNECTED LOAD PER PHASE

ØA:	17,845 VA
ØB:	15,240 VA
ØA:	15,145 VA
	48,230 VA
	58 AMPS

LOAD SUMMARY

LOAD TYPE	CONNECTED	DESIGN	DESIGN BASIS
LIGHTING:	31,070.0 VA	38,837.5 VA	125% OF CONNECTED
RECEPT:	180.0 VA	180.0 VA	PER NEC 220.44
MISC:	11,220.0 VA	11,220.0 VA	100% OF CONNECTED
HEATING	600.0 VA	600.0 VA	100% OF CONNECTED
COOLING:	5,160.0 VA	6,060.0 VA	CONNECTED PLUS 25% OF LARGEST UNIT
MOTORS:	0.0 VA	0.0 VA	100% OF CONNECTED
TOTALS:	48,230.0 VA 58 AMPS	56,897.5 VA 68 AMPS	

NOTES:

NO.	DATE	REVISION	APPROV.

CORRIDOR NAME

NTTA®
NORTH TEXAS TOLLWAY AUTHORITY

ELECTRICAL PANEL SCHEDULES

SHEET 6 OF 29

COMPANY LOGO

SECTION

DRAWN CAS DATE 02/08 DESIGNED RDW DATE 02/08
CHECKED RDW DATE 02/08 SCALE NONE

CONTRACT NO. XXXXX-XXX-XX-XX-XX SHEET ___ OF ___

8:06:49 AM

$$$REFLOC$$$10 ..... $$$REFLOC$$$08 ..... $$$REFLOC$$$06 ..... $$$REFLOC$$$04 ..... $$$REFLOC$$$02 .....
$$$REFLOC$$$09 ..... $$$REFLOC$$$07 ..... $$$REFLOC$$$05 ..... $$$REFLOC$$$03 ..... $$$REFLOC$$$01 .....
rkinyuo 1.0000 ft / IN. 7/2/2008 8:06:49 AM \\dalw00\projects\42436\Maintenance\RESM\B28BRESM05.dgn

PANELBOARD

IT CN

MAINS: 100A, MAIN LUGS

VOLTAGE: 480Ø3Ø, 60 HZ

NORMAL DISTRIBUTION SYSTEM

EQUIPMENT RATING: 14 KAIC SYMMETRICAL (RMS)
PANEL MOUNTING: SURFACE NEMA-1 ENCLOSURE IN NEMA-3R INTERGRATED ENCLOSURE
BREAKER MOUNTIING: BOLT-ON

LOCATION:

CKT	LOAD DESCRIPTION	C/B & ACC	LOAD	WIRE & CONDUIT	PHASE	WIRE & CONDUIT	LOAD	C/B & ACC	LOAD DESCRIPTION	CKT
1	SPARE	40/2	0		A		0	40/2	SPARE	2
3			0		B		0			4
5	SPARE	40/2	0		C		0	40/2	SPARE	6
7			0		A		0			8
9	SPARE	40/2	0		B		0	40/2	SPARE	10
11			0		C		0			12
13	SPARE	40/2	0		A		0	40/2	SPARE	14
15			0		B		0			16
17	SPARE	40/2	0		C		0	40/2	SPARE	18
19			0		A		0			20
21	SPARE	40/2	0		B		0	40/2	SPARE	22
23			0		C		0			24
25										26
27										28
29										30
31										32
33										34
35										36
37										38
39										40
41										42

CKT BREAKER ACCESSORIES:

- G: GFCI (5MA TRIP)
- H: HACR-RATED BREAKER
- L: LOCKING HANDLE
- M: MOTOR OPERATOR
- S: SHUNT-TRIP
- SW: SWITCHING-DUTY

CONNECTED LOAD PER PHASE

ØA:	0 VA
ØB:	0 VA
ØC:	0 VA
	0 VA
	0 AMPS

LOAD SUMMARY

LOAD TYPE	CONNECTED	DESIGN	DESIGN BASIS
LIGHTING:	0 VA	0 VA	125% OF CONNECTED
RECEPT:	0 VA	0 VA	PER NEC 220.44
MISC:	0 VA	0 VA	100% OF CONNECTED
HEATING	0 VA	0 VA	100% OF CONNECTED
COOLING:	0 VA	0 VA	CONNECTED PLUS 25% OF LARGEST
MOTORS:	0 VA	0 VA	100% OF CONNECTED
TOTALS:	0 VA 0 AMPS	0 VA 0 AMPS	

NOTES:

PANELBOARD

LIGHTING CN

MAINS: 100A, MAIN LUGS

VOLTAGE: 480Ø3Ø, 60 HZ

NORMAL DISTRIBUTION SYSTEM

EQUIPMENT RATING: 14 KAIC SYMMETRICAL (RMS)
PANEL MOUNTING: SURFACE NEMA-1 ENCLOSURE IN NEMA-3R INTERGRATED ENCLOSURE
BREAKER MOUNTIING: BOLT-ON

LOCATION:

CKT	LOAD DESCRIPTION	C/B & ACC	LOAD	WIRE & CONDUIT	PHASE	WIRE & CONDUIT	LOAD	C/B & ACC	LOAD DESCRIPTION	CKT
1	LIGHTING HIGH MAST	40/3	1800	3#4,#8GND,1"C	A	2#4,#8GND,3/4"C	800	40/2	UNDERPASS & RAMP LIGHTING	2
3			1800		B		800			4
5		40/3	1800		C		575	40/2	UNDERPASS LIGHTING	6
7	LIGHTING HIGH MAST		1800	3#4,#8 GND,1"C	A	2#4,#8GND,3/4"C	575			8
9		40/3	1800		B		1800	40/3	LIGHTING HIGH MAST	10
11			1800		C		1800			12
13	LIGHTING HIGH MAST	40/3	1800	3#4,#8 GND,1"C	A	3#4,#8GND,1"C	1800			14
15			1800		B					16
17		40/3	1800		C					18
19	LIGHTING HIGH MAST		1800	3#4, #8 GND, 1"C	A					20
21		40/3	1800		B					22
23			1800		C					24
25										26
27										28
29										30
31										32
33										34
35										36
37										38
39										40
41										42

CKT BREAKER ACCESSORIES:

- G: GFCI (5MA TRIP)
- H: HACR-RATED BREAKER
- L: LOCKING HANDLE
- M: MOTOR OPERATOR
- S: SHUNT-TRIP
- SW: SWITCHING-DUTY

CONNECTED LOAD PER PHASE

ØA:	10,375 VA
ØB:	9,800 VA
ØC:	9,575 VA
	29,750 VA
	36 AMPS

LOAD SUMMARY

LOAD TYPE	CONNECTED	DESIGN	DESIGN BASIS
LIGHTING:	29,750 VA	37,188 VA	125% OF CONNECTED
RECEPT:	0 VA	0 VA	PER NEC 220.44
MISC:	0 VA	0 VA	100% OF CONNECTED
HEATING	0 VA	0 VA	100% OF CONNECTED
COOLING:	0 VA	0 VA	CONNECTED PLUS 25% OF LARGEST
MOTORS:	0 VA	0 VA	100% OF CONNECTED
TOTALS:	29,750 VA 36 AMPS	37,188 VA 45 AMPS	

NOTES:

NO.	DATE	REVISION	APPROV.

CORRIDOR NAME

NTTA®
NORTH TEXAS TOLLWAY AUTHORITY

ELECTRICAL PANEL SCHEDULES

SHEET 7 OF 29

COMPANY LOGO

SECTION

DRAWN CAS DATE 02/08 CHECKED RDW DATE 02/08
DESIGNED RDW DATE 02/08 SCALE NONE

CONTRACT NO. XXXXX-XXX-XX-XX-XX SHEET ___ OF ___

8:07:18 AM

$$$REFLOG$$$10 $$$REFLOG$$$08 $$$REFLOG$$$06 $$$REFLOG$$$04 $$$REFLOG$$$02
$$$REFLOG$$$09 $$$REFLOG$$$07 $$$REFLOG$$$05 $$$REFLOG$$$03 $$$REFLOG$$$01
rkinyua 1.0000 ft / IN. 7/2/2008 8:07:18 AM \\dalw00\projects\42436\Maintenance\RESM\B28BRESM06.dgn

PANELBOARD

IT CS

MAINS: 100A, MAIN LUGS

VOLTAGE: 480Y/277, 60 HZ

NORMAL DISTRIBUTION SYSTEM

AVAILABE FAULT CURRENT: 14,000 AMPS

EQUIPMENT RATING: 22 KAIC SYMMETRICAL (RMS)

LOCATION: INSIDE OF THE NEMA 3R ENCLOSURE

PANEL MOUNTIING: SURFACE NEMA-1 ENCLOSURE IN NEMA-3R INTERGRATED ENCLOSURE

CKT	LOAD DESCRIPTION	C/B & ACC	LOAD	WIRE & CONDUIT	PHASE	WIRE & CONDUIT	LOAD	C/B & ACC	LOAD DESCRIPTION	CKT
1	CCTV1	60/2	960	2#4,#8GND,3/4"C	A		0	60/2	SPARE	2
			960		B		0			
3	CCTV2	60/2	960	2#4,#8 GND,3/4"C	A		0	60/2	SPARE	4
			960		B		0			
5	SPARE	60/2	0		A		0	60/2	SPARE	6
			0		B		0			
7	SPARE	60/2	0		A		0	60/2	SPARE	8
			0		B		0			
17										18
19										20
21										22
23										24

CKT BREAKER ACCESSORIES:

- G: GFCI (5MA TRIP)
- H: HACR-RATED BREAKER
- L: LOCKING HANDLE
- M: MOTOR OPERATOR
- S: SHUNT-TRIP
- SW: SWITCHING-DUTY

CONNECTED LOAD PER PHASE

ØA:	1,920 VA
ØB:	1,920 VA
	3,840 VA
	8 AMPS

LOAD SUMMARY

LOAD TYPE	CONNECTED	DESIGN	DESIGN BASIS
LIGHTING:	0 VA	0 VA	125% OF CONNECTED
RECEPT:	0 VA	0 VA	PER NEC 220.44
MISC:	1,920 VA	1,920 VA	100% OF CONNECTED
HEATING	0 VA	0 VA	100% OF CONNECTED
COOLING:	1,920 VA	1,920 VA	CONNECTED PLUS 25% OF LARGEST MOTOR
MOTORS:	0 VA	0 VA	100% OF CONNECTED
TOTALS:	3,840 VA	3,840 VA	
	8 AMPS	8 AMPS	

NOTES:

PANELBOARD

LIGHTING CS

MAINS: 100A, MAIN LUGS

VOLTAGE: 480Y/277, 60 HZ

NORMAL DISTRIBUTION SYSTEM

AVAILABE FAULT CURRENT: 14,000 AMPS

EQUIPMENT RATING: 22 KAIC SYMMETRICAL (RMS)

LOCATION: INSIDE OF THE NEMA 3R ENCLOSURE

PANEL MOUNTIING: SURFACE NEMA-1 ENCLOSURE IN NEMA-3R INTERGRATED ENCLOSURE

CKT	LOAD DESCRIPTION	C/B & ACC	LOAD	WIRE & CONDUIT	PHASE	WIRE & CONDUIT	LOAD	C/B & ACC	LOAD DESCRIPTION	CKT
1	UNDERPASS LIGHTING	40/2	250	2#4,#8GND,3/4"C	A	2#4,#8GND,3/4"C	2700	40/2	LIGHTING HIGH MAST	2
			250		B		2700			
3	LIGHTING HIGH MAST	40/2	2700	2#4,#8 GND,3/4"C	A	2#4,#8GND,3/4"C	0	40/2	LIGHTING	4
			2700		B		0			
5	LIGHTING HIGH MAST	40/2	2700	2#4,#8 GND,3/4"C	A	2#4,#8 GND,3/4"C	0	40/2	LIGHTING	6
			2700		B		0			
7	LIGHTING HIGH MAST	40/2	2700	2#4,#8 GND,3/4"C	A	2#4,#8 GND,3/4"C	0	40/2	LIGHTING	8
			2700		B		0			
17										18
19										20
21										22
23										24

CKT BREAKER ACCESSORIES:

- G: GFCI (5MA TRIP)
- H: HACR-RATED BREAKER
- L: LOCKING HANDLE
- M: MOTOR OPERATOR
- S: SHUNT-TRIP
- SW: SWITCHING-DUTY

CONNECTED LOAD PER PHASE

ØA:	11,050 VA
ØB:	11,050 VA
	22,100 VA
	46 AMPS

LOAD SUMMARY

LOAD TYPE	CONNECTED	DESIGN	DESIGN BASIS
LIGHTING:	22,100 VA	27,625 VA	125% OF CONNECTED
RECEPT:	0 VA	0 VA	PER NEC 220.44
MISC:	0 VA	0 VA	100% OF CONNECTED
HEATING	0 VA	0 VA	100% OF CONNECTED
COOLING:	0 VA	0 VA	CONNECTED PLUS 25% OF LARGEST MOTOR
MOTORS:	0 VA	0 VA	100% OF CONNECTED
TOTALS:	22,100 VA	27,625 VA	
	46 AMPS	58 AMPS	

NOTES:

PANELBOARD

MAIN PANEL CS

MAINS: 400A, MAIN CKT BRKR

VOLTAGE: 480Y/277, 60 HZ

NORMAL DISTRIBUTION SYSTEM

AVAILABE FAULT CURRENT: 22,000 AMPS

LOCATION: PANEL BOARD INSIDE OF A NEMA 3R ENCLOSURE

EQUIPMENT RATING: 25 KAIC SYMMETRICAL (RMS)

PANEL MOUNTIING: SURFACE NEMA-1 ENCLOSURE IN NEMA-3R INTERGRATED ENCLOSURE

CKT	LOAD DESCRIPTION	C/B & ACC	LOAD	WIRE & CONDUIT	PHASE	WIRE & CONDUIT	LOAD	C/B & ACC	LOAD DESCRIPTION	CKT
1	GENERATOR BREAKER	100/2	0	2#1,#8GND,1-1/4"C	A	2#1,#8GND,1-1/4"C	11050	100/2	LIGHTING CS	2
			0		B		11050			
3	ETC GANTRY W-CR	60/2	10190	2#1,#8GND,1-1/4"C	A	2#1,#8GND,1-1/4"C	1920	100/2	IT CS	4
			8290		B		1920			
5	ETC GANTRY FP-W	60/2	10190	2#2,#8GND,1-1/4"C	A	2#2,#8GND,1-1/4"C	4392	40/2	COMMUNICATION HUT	6
			8290		B		2600			
7	ETC GANTRY W-FP	60/2	10190	2#2,#8GND,1-1/4"C	A	2#12,#8GND,3/4"C	0	15/2	MINPOWER ENCLOSURE 5 KVA	8
			8290		B		0			
9										10
11										12

CKT BREAKER ACCESSORIES:

- G: GFCI (5MA TRIP)
- H: HACR-RATED BREAKER
- L: LOCKING HANDLE
- M: MOTOR OPERATOR
- S: SHUNT-TRIP
- SW: SWITCHING-DUTY

CONNECTED LOAD PER PHASE

ØA:	47,932 VA
ØB:	40,440 VA
	88,372 VA
	184 AMPS

LOAD SUMMARY

LOAD TYPE	CONNECTED	DESIGN	DESIGN BASIS
LIGHTING:	26,452 VA	33,065 VA	125% OF CONNECTED
RECEPT:	540 VA	540 VA	PER NEC 220.44
MISC:	40,980 VA	40,980 VA	100% OF CONNECTED
HEATING	1,800 VA	1,800 VA	100% OF CONNECTED
COOLING:	18,600 VA	19,200 VA	CONNECTED PLUS 25% OF LARGEST UNIT
MOTORS:	0 VA	0 VA	100% OF CONNECTED
TOTALS:	83,372 VA	95,585 VA	
	184 AMPS	199 AMPS	

NOTES:

1. THE BUS RATING IS TO BE 400 AMP

NO.	DATE	REVISION	APPROV.

CORRIDOR NAME

NTTA® NORTH TEXAS TOLLWAY AUTHORITY

ELECTRICAL PANEL SCHEDULES

SHEET 8 OF 29

COMPANY LOGO

SECTION

DRAWN CAS DATE 02/08 DESIGNED RDW DATE 02/08

CHECKED RDW DATE 02/08 SCALE NONE

CONTRACT NO. XXXXX-XXX-XX-XX-XX SHEET ___ OF ___

8:07:47 AM

$$$REFLOG$$$10 $$$REFLOG$$$08 $$$REFLOG$$$06 $$$REFLOG$$$04 $$$REFLOG$$$02
$$$REFLOG$$$09 $$$REFLOG$$$07 $$$REFLOG$$$05 $$$REFLOG$$$03 $$$REFLOG$$$01
rkinyua 1.0000 ft / IN. 7/2/2008 8:07:47 AM \\dalw00\projects\42436\Maintenance\RESM\B28BRESM07.dgn

PANELBOARD

IT RW

MAINS: 225A, MAIN LUGS

VOLTAGE: 480ØØ, 60 HZ

NORMAL DISTRIBUTION SYSTEM

AVAILABE FAULT CURRENT: 14,000 AMPS
EQUIPMENT RATING: 22 KAIC SYMMETRICAL (RMS)
PANEL MOUNTIING: SURFACE NEMA-1 ENCLOSURE IN NEMA-3R INTERGRATED ENCLOSURE

LOCATION: INSIDE OF THE NEMA 3R ENCLOSURE

CKT	LOAD DESCRIPTION	C/B & ACC	LOAD	WIRE & CONDUIT	PHASE	WIRE & CONDUIT	LOAD	C/B & ACC	LOAD DESCRIPTION	CKT
1	CCTV 3	60/2	960	2#4,#8GND,3/4"C	A	2#4,#8GND,3/4"C	960	60/2	AVI	2
			960		B		1560			
3	CCTV 4, DMS, AVI	60/2	4910	2#4,#8 GND,3/4"C	A		0	60/2	SPARE	4
			4910		B		0			
5	SPARE	60/2	0		A		0	60/2	SPARE	6
			0		B		0			
7	SPARE	60/2	0		A		0	60/2	SPARE	8
			0		B		0			
17										18
19										20
21										22
23										24

CKT BREAKER ACCESSORIES:
G: GFCI (5MA TRIP)
H: HACR-RATED BREAKER
L: LOCKING HANDLE
M: MOTOR OPERATOR
S: SHUNT-TRIP
SW: SWITCHING-DUTY

CONNECTED LOAD PER PHASE
ØA: 6,830 VA
ØB: 7,430 VA
14,260 VA
30 AMPS

LOAD SUMMARY

LOAD TYPE	CONNECTED	DESIGN	DESIGN BASIS
LIGHTING:	3,000 VA	3,750 VA	125% OF CONNECTED
RECEPT:	0 VA	0 VA	PER NEC 220.44
MISC:	5,620 VA	5,620 VA	100% OF CONNECTED
HEATING	0 VA	0 VA	100% OF CONNECTED
COOLING:	4,080 VA	4,860 VA	CONNECTED PLUS 25% OF LARGEST UNIT
MOTORS:	1,560 VA	1,560 VA	100% OF CONNECTED
TOTALS:	14,260 VA	15,790 VA	
	30 AMPS	33 AMPS	

NOTES:

PANELBOARD

LIGHTING RW

MAINS: 225A, MAIN LUGS

VOLTAGE: 480ØØ, 60 HZ

NORMAL DISTRIBUTION SYSTEM

AVAILABE FAULT CURRENT: 14,000 AMPS
EQUIPMENT RATING: 22 KAIC SYMMETRICAL (RMS)
PANEL MOUNTIING: SURFACE NEMA-1 ENCLOSURE IN NEMA-3R INTERGRATED ENCLOSURE

LOCATION: INSIDE OF THE NEMA 3R ENCLOSURE

CKT	LOAD DESCRIPTION	C/B & ACC	LOAD	WIRE & CONDUIT	PHASE	WIRE & CONDUIT	LOAD	C/B & ACC	LOAD DESCRIPTION	CKT
1	RAMP LIGHTING	40/2	1250	2#4,#8 GND,3/4"C	A	2#4,#8GND,3/4"C	1125	40/2	LIGHTING	2
			1250		B		1125			
3	UNDERPASS RAMP LIGHTING	40/2	1250	2#4,#8 GND,3/4"C	A	2#4,#8GND,3/4"C	1125	40/2	LIGHTING	4
			1250		B		1125			
5	UNDERPASS RAMP LIGHTING	40/2	1250	2#4,#8 GND,3/4"C	A	2#4,#8 GND,3/4"C	2700	40/2	HIGH MAST LIGHTING	6
			1250		B		2700			
7	RAMP LIGHTING	40/2	1250	2#4,#8 GND,3/4"C	A	2#4,#8 GND,3/4"C	2700	40/2	HIGH MAST LIGHTING	8
			1250		B		2700			
9	HIGH MAST LIGHTING	40/2	2700	2#4,#8 GND,3/4"C	A	2#4,#8 GND,3/4"C	2700	40/2	HIGH MAST LIGHTING	10
			2700		B		2700			
11	HIGH MAST LIGHTING	40/2	2700	2#4,#8 GND,3/4"C	A					12
			2700		B					

CKT BREAKER ACCESSORIES:
G: GFCI (5MA TRIP)
H: HACR-RATED BREAKER
L: LOCKING HANDLE
M: MOTOR OPERATOR
S: SHUNT-TRIP
SW: SWITCHING-DUTY

CONNECTED LOAD PER PHASE
ØA: 20,750 VA
ØB: 20,750 VA
41,500 VA
86 AMPS

LOAD SUMMARY

LOAD TYPE	CONNECTED	DESIGN	DESIGN BASIS
LIGHTING:	41,500 VA	51,875 VA	125% OF CONNECTED
RECEPT:	0 VA	0 VA	PER NEC 220.44
MISC:	0 VA	0 VA	100% OF CONNECTED
HEATING	0 VA	0 VA	100% OF CONNECTED
COOLING:	0 VA	0 VA	CONNECTED PLUS 25% OF LARGEST UNIT
MOTORS:	0 VA	0 VA	100% OF CONNECTED
TOTALS:	41,500 VA	51,875 VA	
	86 AMPS	108 AMPS	

NOTES:

PANELBOARD

MAIN PANEL RW

MAINS: 400A, MAIN CKT BRKR

VOLTAGE: 480ØØ, 60 HZ

NORMAL DISTRIBUTION SYSTEM

AVAILABE FAULT CURRENT: 22,000 AMPS
EQUIPMENT RATING: 25 KAIC SYMMETRICAL (RMS)
PANEL MOUNTIING: SURFACE NEMA-1 ENCLOSURE IN NEMA-3R INTERGRATED ENCLOSURE

LOCATION: PANEL BOARD INSIDE
OF A NEMA 3R ENCLOSURE

CKT	LOAD DESCRIPTION	C/B & ACC	LOAD	WIRE & CONDUIT	PHASE	WIRE & CONDUIT	LOAD	C/B & ACC	LOAD DESCRIPTION	CKT
1	GENERATOR BREAKER	100/2	0	2#1,#8GND,1-1/4"C	A	2#1,#8GND,1-1/4"C	20750	100/2	LIGHTING RW	2
			0		B		20750			
3	SPARE	60/2	0		A	2#1,#8GND,1-1/4"C	6830	100/2	IT RW	4
			0		B		7430			
5	SPARE	60/2	0		A		0	60/2	SPARE	6
			0		B		0			
7	SPARE	60/2	0		A	2#12,#8GND,3/4"C	0	15/2	MINPOWER ENCLOSURE 5 KVA	8
			0		B		0			
9										10
11										12

CKT BREAKER ACCESSORIES:
G: GFCI (5MA TRIP)
H: HACR-RATED BREAKER
L: LOCKING HANDLE
M: MOTOR OPERATOR
S: SHUNT-TRIP
SW: SWITCHING-DUTY

CONNECTED LOAD PER PHASE
ØA: 27,580 VA
ØB: 28,180 VA
55,760 VA
116 AMPS

LOAD SUMMARY

LOAD TYPE	CONNECTED	DESIGN	DESIGN BASIS
LIGHTING:	44,500 VA	55,625 VA	125% OF CONNECTED
RECEPT:	0 VA	0 VA	PER NEC 220.44
MISC:	5,620 VA	5,620 VA	100% OF CONNECTED
HEATING	0 VA	0 VA	100% OF CONNECTED
COOLING:	4,080 VA	4,860 VA	CONNECTED PLUS 25% OF LARGEST MOTOR
MOTORS:	1,560 VA	1,560 VA	100% OF CONNECTED
TOTALS:	55,760 VA	67,665 VA	
	116 AMPS	141 AMPS	

NOTES:

NO.	DATE	REVISION	APPROV.

CORRIDOR NAME

NTTA®
NORTH TEXAS TOLLWAY AUTHORITY

ELECTRICAL PANEL SCHEDULES

SHEET 9 OF 29

COMPANY LOGO

SECTION

DRAWN CAS DATE 02/08 DESIGNED RDW DATE 02/08
CHECKED RDW DATE 02/08 SCALE NONE

CONTRACT NO. XXXXX-XXX-XX-XX-XX SHEET ___ OF ___

8:08:15 AM

$$$REFLOG$$$10 $$$REFLOG$$$08 $$$REFLOG$$$06 $$$REFLOG$$$04 $$$REFLOG$$$02
$$$REFLOG$$$09 $$$REFLOG$$$07 $$$REFLOG$$$05 $$$REFLOG$$$03 $$$REFLOG$$$01
rkinyua 8:08:15 AM
1.0000 ft / IN.
7/2/2008 \\dalw00\projects\42436\Maintenance\RESM\B28BRESM08.dgn

PANELBOARD

IT MR

MAINS: 225A, MAIN LUGS

VOLTAGE: 480ØØ, 60 HZ

NORMAL DISTRIBUTION SYSTEM

AVAILABE FAULT CURRENT: 14,000 AMPS
EQUIPMENT RATING: 22 KAIC SYMMETRICAL (RMS)
PANEL MOUNTIING: SURFACE NEMA-1 ENCLOSURE IN NEMA-3R INTERGRATED ENCLOSURE

LOCATION: INSIDE OF THE NEMA 3R ENCLOSURE

CKT	LOAD DESCRIPTION	C/B & ACC	LOAD	WIRE & CONDUIT	PHASE	WIRE & CONDUIT	LOAD	C/B & ACC	LOAD DESCRIPTION	CKT
1	FUTURE IT	60/2	2310	2#4,#8 GND,3/4"C	A	2#4,#8 GND,3/4"C	960	60/2	SPARE	2
			2310		B		1560			
3	FUTURE IT	60/2	2310	2#4,#8 GND,3/4"C	A		0	60/2	SPARE	4
			2310		B		0			
5	SPARE	60/2	0		A		0	60/2	SPARE	6
			0		B		0			
7	SPARE	60/2	0		A		0	60/2	SPARE	8
			0		B		0			
17										18
19										20
21										22
23										24

CKT BREAKER ACCESSORIES:
- G: GFCI (5MA TRIP)
- H: HACR-RATED BREAKER
- L: LOCKING HANDLE
- M: MOTOR OPERATOR
- S: SHUNT-TRIP
- SW: SWITCHING-DUTY

CONNECTED LOAD PER PHASE
- ØA: 4,620 VA
- ØB: 4,620 VA
- 9,240 VA
- 19 AMPS

LOAD SUMMARY

LOAD TYPE	CONNECTED	DESIGN	DESIGN BASIS
LIGHTING:	0 VA	0 VA	125% OF CONNECTED
RECEPT:	3,840 VA	3,840 VA	PER NEC 220.44
MISC:	0 VA	0 VA	100% OF CONNECTED
HEATING	0 VA	0 VA	100% OF CONNECTED
COOLING:	5,400 VA	6,075 VA	CONNECTED PLUS 25% OF LARGEST UNIT
MOTORS:	0 VA	0 VA	100% OF CONNECTED
TOTALS:	9,240 VA	9,915 VA	
	19 AMPS	21 AMPS	

NOTES:

PANELBOARD

LIGHTING MR

MAINS: 225A, MAIN LUGS

VOLTAGE: 480ØØ, 60 HZ

NORMAL DISTRIBUTION SYSTEM

AVAILABE FAULT CURRENT: 14,000 AMPS
EQUIPMENT RATING: 22 KAIC SYMMETRICAL (RMS)
PANEL MOUNTIING: SURFACE NEMA-1 ENCLOSURE IN NEMA-3R INTERGRATED ENCLOSURE

LOCATION: INSIDE OF THE NEMA 3R ENCLOSURE

CKT	LOAD DESCRIPTION	C/B & ACC	LOAD	WIRE & CONDUIT	PHASE	WIRE & CONDUIT	LOAD	C/B & ACC	LOAD DESCRIPTION	CKT
1	LIGHTING	40/2	1800	2#4,#8 GND,3/4"C	A	2#4,#8 GND,3/4"C	1800	40/2	LIGHTING	2
			1800		B		1800			
3	LIGHTING	40/2	2025	2#4,#8 GND,3/4"C	A	2#4,#8 GND,3/4"C	1800	40/2	LIGHTING	4
			2025		B		1800			
5	LIGHTING - FUTURE	40/2	2025	2#4,#8 GND,3/4"C	A	2#4,#8 GND,3/4"C	2025	40/2	LIGHTING - FUTURE	6
			2025		B		2025			
7	LIGHTING - FUTURE	40/2	2025	2#4,#8 GND,3/4"C	A	2#4,#8 GND,3/4"C	2025	40/2	LIGHTING - FUTURE	8
			2025		B		2025			
17										18
19										20
21										22
23										24

CKT BREAKER ACCESSORIES:
- G: GFCI (5MA TRIP)
- H: HACR-RATED BREAKER
- L: LOCKING HANDLE
- M: MOTOR OPERATOR
- S: SHUNT-TRIP
- SW: SWITCHING-DUTY

CONNECTED LOAD PER PHASE
- ØA: 15,525 VA
- ØB: 15,525 VA
- 31,050 VA
- 65 AMPS

LOAD SUMMARY

LOAD TYPE	CONNECTED	DESIGN	DESIGN BASIS
LIGHTING:	31,050 VA	38,813 VA	125% OF CONNECTED
RECEPT:	0 VA	0 VA	PER NEC 220.44
MISC:	0 VA	0 VA	100% OF CONNECTED
HEATING	0 VA	0 VA	100% OF CONNECTED
COOLING:	0 VA	0 VA	CONNECTED PLUS 25% OF LARGEST MOTOR
MOTORS:	0 VA	0 VA	100% OF CONNECTED
TOTALS:	31,050 VA	38,813 VA	
	65 AMPS	81 AMPS	

NOTES:

PANELBOARD

MAIN PANEL MR

MAINS: 400A, MAIN CKT BRKR

VOLTAGE: 480ØØ, 60 HZ

NORMAL DISTRIBUTION SYSTEM

AVAILABE FAULT CURRENT: 22,000 AMPS
EQUIPMENT RATING: 25 KAIC SYMMETRICAL (RMS)
PANEL MOUNTIING: SURFACE NEMA-1 ENCLOSURE IN NEMA-3R INTERGRATED ENCLOSURE

LOCATION: PANEL BOARD INSIDE OF A NEMA 3R ENCLOSURE

CKT	LOAD DESCRIPTION	C/B & ACC	LOAD	WIRE & CONDUIT	PHASE	WIRE & CONDUIT	LOAD	C/B & ACC	LOAD DESCRIPTION	CKT
1	GENERATOR BREAKER	100/2	0	2#1,#8 GND,1-1/4"C	A	2#1,#8 GND,1-1/4"C	15525	100/2	LIGHTING MR	2
			0		B		15525			
3	ETC GANTRY	60/2	10190	2#1,#8 GND,1-1/4"C	A	2#1,#8 GND,1-1/4"C	4620	100/2	IT MR	4
			8290		B		4620			
5	ETC GANTRY	60/2	10190	2#1,#8 GND,1-1/4"C	A		0	60/2	SPARE	6
			8290		B		0			
7	SPARE	60/2	0		A	2#12,#8 GND,3/4"C	0	15/2	MINPOWER ENCLOSURE 5 KVA	8
			0		B		0			
9										10
11										12

CKT BREAKER ACCESSORIES:
- G: GFCI (5MA TRIP)
- H: HACR-RATED BREAKER
- L: LOCKING HANDLE
- M: MOTOR OPERATOR
- S: SHUNT-TRIP
- SW: SWITCHING-DUTY

CONNECTED LOAD PER PHASE
- ØA: 40,525 VA
- ØB: 36,725 VA
- 77,250 VA
- 116 AMPS

LOAD SUMMARY

LOAD TYPE	CONNECTED	DESIGN	DESIGN BASIS
LIGHTING:	33,690 VA	42,113 VA	125% OF CONNECTED
RECEPT:	4,200 VA	4,200 VA	PER NEC 220.44
MISC:	22,400 VA	22,440 VA	100% OF CONNECTED
HEATING	1,200 VA	1,200 VA	100% OF CONNECTED
COOLING:	15,720 VA	17,070 VA	CONNECTED PLUS 25% OF LARGEST UNIT
MOTORS:	0 VA	VA	100% OF CONNECTED
TOTALS:	77,250 VA	87,023 VA	
	161 AMPS	181 AMPS	

NOTES:

NO.	DATE	REVISION	APPROV.

CORRIDOR NAME

NTTA®
NORTH TEXAS TOLLWAY AUTHORITY

ELECTRICAL PANEL SCHEDULES

SHEET 10 OF 29

COMPANY LOGO

SECTION

DRAWN CAS DATE 02/08 DESIGNED RDW DATE 02/08
CHECKED RDW DATE 02/08 SCALE NONE

CONTRACT NO. XXXXX-XXX-XX-XX-XX SHEET ___ OF ___

8:08:46 AM

$$$REFLOG$$$10 $$$REFLOG$$$08 $$$REFLOG$$$06 $$$REFLOG$$$04 $$$REFLOG$$$02
$$$REFLOG$$$09 $$$REFLOG$$$07 $$$REFLOG$$$05 $$$REFLOG$$$03 $$$REFLOG$$$01
rkinyua 8:08:46 AM
1.0000 ft / IN.
7/2/2008 \\dalw00\projects\42436\Maintenance\RESM\B28BRESM09.dgn

PANELBOARD

MAINLANE GANTRY SIDE 1

MAINS: 200A MAIN CKT BRKR

VOLTAGE: 120/240 1Ø, 60 HZ

NORMAL DISTRIBUTION SYSTEM

AVAILABE FAULT CURRENT: 8,000 AMPS

EQUIPMENT RATING: 10 KAIC SYMMETRICAL (RMS)

LOCATION:

PANEL MOUNTIING: SURFACE NEMA-1 ENCLOSURE IN NEMA-3R INTERGRATED ENCLOSURE

CKT	LOAD DESCRIPTION	C/B & ACC	LOAD	WIRE & CONDUIT	PHASE	WIRE & CONDUIT	LOAD	C/B & ACC	LOAD DESCRIPTION	CKT
1	ILP CABINET	20/1	1920	2#12,#12 GND,3/4"C	A	2#12,#12 GND,3/4"C	1200	20/1	NETWORK CABINET	2
3	ILP CABINET AC	20/1	1920	2#12,#12 GND,3/4"C	B	2#12,#12 GND,3/4"C	1200	20/1	FIBER RACK	4
5	VES CABINET	20/1	1920	2#12,#12 GND,3/4"C	A	2#12,#12 GND,3/4"C	1200	20/1	SECURITY CABINET	6
7	VES CABINET AC	20/1	1920	2#12,#12 GND,3/4"C	B	2#12,#12 GND,3/4"C	1080	20/1	VES CAMERA BOX REAR	8
9	VES CAMERA BOX FRONT	20/1	1080	2#12,#12 GND,3/4"C	A	2#12,#12 GND,3/4"C	1080	20/1	VES CAMERA BOX REAR	10
11	VES CAMERA BOX FRONT	20/1	1080	2#12,#12 GND,3/4"C	B	2#12,#12 GND,3/4"C	1080	20/1	VES CAMERA BOX REAR	12
13	VES CAMERA BOX FRONT	20/1	1080	2#12,#12 GND,3/4"C	A	2#12,#12 GND,3/4"C	1080	20/1	VES CAMERA BOX REAR	14
15	VES CAMERA BOX FRONT	20/1	1080	2#12,#12 GND,3/4"C	B	2#12,#12 GND,3/4"C	1080	20/1	VES CAMERA BOX REAR	16
17	VES CAMERA BOX FRONT	20/1	1080	2#12,#12 GND,3/4"C	A	2#12,#12 GND,3/4"C	1080	20/1	VES CAMERA BOX REAR	18
19	VES CAMERA BOX FRONT	20/1	1080	2#12,#12 GND,3/4"C	B	2#12,#12 GND,3/4"C	1080	20/1	VES CAMERA BOX REAR	20
21	VES CAMERA BOX FRONT	20/1	1080	2#12,#12 GND,3/4"C	A	2#12,#12 GND,3/4"C	1080	20/1	VES CAMERA BOX REAR	22
23	COLUMN WALL WASH LIGHTING	20/1	400	2#12,#12 GND,3/4"C	B	2#12,#12 GND,3/4"C	800	20/1	SECURITY PTZ CAMERA	24
25	A/C UNIT CONDENSATE PUMP	20/1	100	2#12,#12 GND,3/4"C	A	2#12,#12 GND,3/4"C	400	20/1	COLUMN WALL WASH LIGHTING	26
27	NTTA LOGO SIGN	20/1	600	2#12,#12 GND,3/4"C	B	2#12,#12 GND,3/4"C	360	20/1	RECEPTACLE	28
29	IT BLDG EXTERIOR LIGHTING	20/1	150	2#12,#12 GND,3/4"C	A	2#12,#12 GND,3/4"C	302	20/1	LIGHTING	30
31	GENERATOR BATTERY	20/1	1400	2#12,#12 GND,3/4"C	B	2#12,#12 GND,3/4"C	0	20/1	TVSS	32
33	ATS CONTROLS AND HEATER	20/1	600	2#12,#12 GND,3/4"C	A		0	20/1		34
35	SPARE	20/1	0		B	2#12,#12 GND,3/4"C	768	25/2	CU-1	36
37	SPARE	20/1	0		A		768			38
39	IN DOOR AC UNIT	15/2	120	2#12,#12 GND,3/4"C	B		0	20/1	SPARE	40
41			120		A		0	20/1	SPARE	42

CKT BREAKER ACCESSORIES:

- G: GFCI (5MA TRIP)
- H: HACR-RATED BREAKER
- L: LOCKING HANDLE
- M: MOTOR OPERATOR
- S: SHUNT-TRIP
- SW: SWITCHING-DUTY

CONNECTED LOAD PER PHASE

ØA:	17,320 VA
ØB:	17,048 VA
	34,368 VA
	143 AMPS

LOAD SUMMARY

LOAD TYPE	CONNECTED	DESIGN	DESIGN BASIS
LIGHTING:	3,388 VA	4,235 VA	125% OF CONNECTED
RECEPT:	360 VA	360 VA	PER NEC 220.44
MISC:	30,520 VA	30,520 VA	100% OF CONNECTED
HEATING	0 VA	0 VA	100% OF CONNECTED
COOLING:	0 VA	0 VA	100% OF CONNECTED
MOTORS:	100 VA	125 VA	CONNECTED PLUS 25% OF LARGEST MOTOR
TOTALS:	34,368 VA 143 AMPS	35,240 VA 147 AMPS	

NOTES:
THE STANDARD ESC HAS THREE PHASE PANELBOARD THIS SITE WILL REQUIRE THE ELECTRICAL CONTRACTOR TO BUY SINGLE PHASE PANELBOARDS DO TO A SINGLE PHASE SERVICE IS ALL THAT IS AVAILABLE.

PANELBOARD

MAINLANE GANTRY SIDE 2

MAINS: 200A MAIN CKT BRKR

VOLTAGE: 120/240 1Ø, 60 HZ

NORMAL DISTRIBUTION SYSTEM

AVAILABE FAULT CURRENT: 8,000 AMPS

EQUIPMENT RATING: 10 KAIC SYMMETRICAL (RMS)

LOCATION:

PANEL MOUNTIING: SURFACE NEMA-1 ENCLOSURE IN NEMA-3R INTERGRATED ENCLOSURE

CKT	LOAD DESCRIPTION	C/B & ACC	LOAD	WIRE & CONDUIT	PHASE	WIRE & CONDUIT	LOAD	C/B & ACC	LOAD DESCRIPTION	CKT
1	ILP CABINET	20/1	1920	2#12,#12 GND,3/4"C	A	2#12,#12 GND,3/4"C	1200	20/1	NETWORK CABINET	2
3	ILP CABINET AC	20/1	1920	2#12,#12 GND,3/4"C	B	2#12,#12 GND,3/4"C	1200	20/1	FIBER RACK	4
5	VES CABINET	20/1	1920	2#12,#12 GND,3/4"C	A	2#12,#12 GND,3/4"C	1200	20/1	SECURITY CABINET	6
7	VES CABINET AC	20/1	1920	2#12,#12 GND,3/4"C	B	2#12,#12 GND,3/4"C	1080	20/1	VES CAMERA BOX REAR	8
9	VES CAMERA BOX FRONT	20/1	1080	2#12,#12 GND,3/4"C	A	2#12,#12 GND,3/4"C	1080	20/1	VES CAMERA BOX REAR	10
11	VES CAMERA BOX FRONT	20/1	1080	2#12,#12 GND,3/4"C	B	2#12,#12 GND,3/4"C	1080	20/1	VES CAMERA BOX REAR	12
13	VES CAMERA BOX FRONT	20/1	1080	2#12,#12 GND,3/4"C	A	2#12,#12 GND,3/4"C	1080	20/1	VES CAMERA BOX REAR	14
15	VES CAMERA BOX FRONT	20/1	1080	2#12,#12 GND,3/4"C	B	2#12,#12 GND,3/4"C	1080	20/1	VES CAMERA BOX REAR	16
17	VES CAMERA BOX FRONT	20/1	1080	2#12,#12 GND,3/4"C	A	2#12,#12 GND,3/4"C	1080	20/1	VES CAMERA BOX REAR	18
19	VES CAMERA BOX FRONT	20/1	1080	2#12,#12 GND,3/4"C	B	2#12,#12 GND,3/4"C	1080	20/1	VES CAMERA BOX REAR	20
21	VES CAMERA BOX FRONT	20/1	1080	2#12,#12 GND,3/4"C	A	2#12,#12 GND,3/4"C	1080	20/1	VES CAMERA BOX REAR	22
23	COLUMN WALL WASH LIGHTING	20/1	400	2#12,#12 GND,3/4"C	B	2#12,#12 GND,3/4"C	800	20/1	SECURITY PTZ CAMERA	24
25	A/C UNIT CONDENSATE PUMP	20/1	100	2#12,#12 GND,3/4"C	A	2#12,#12 GND,3/4"C	400	20/1	COLUMN WALL WASH LIGHTING	26
27	NTTA LOGO SIGN	20/1	600	2#12,#12 GND,3/4"C	B	2#12,#12 GND,3/4"C	360	20/1	RECEPTACLE	28
29	IT BLDG EXTERIOR LIGHTING	20/1	150	2#12,#12 GND,3/4"C	A	2#12,#12 GND,3/4"C	302	20/1	LIGHTING	30
31	GENERATOR BATTERY	20/1	0		B	2#12,#12 GND,3/4"C	0	20/1	TVSS	32
33	ATS CONTROLS AND HEATER	20/1	0		A		0	20/1		34
35	SPARE	20/1	0		B	2#12,#12 GND,3/4"C	768	25/2	CU-1	36
37	SPARE	20/1	0		A		768			38
39	IN DOOR AC UNIT	15/2	120	2#12,#12 GND,3/4"C	B		0	20/1	SPARE	40
41			120		A		0	20/1	SPARE	42

CKT BREAKER ACCESSORIES:

- G: GFCI (5MA TRIP)
- H: HACR-RATED BREAKER
- L: LOCKING HANDLE
- M: MOTOR OPERATOR
- S: SHUNT-TRIP
- SW: SWITCHING-DUTY

CONNECTED LOAD PER PHASE

ØA:	16,720 VA
ØB:	15,648 VA
	32,368 VA
	135 AMPS

LOAD SUMMARY

LOAD TYPE	CONNECTED	DESIGN	DESIGN BASIS
LIGHTING:	3,388 VA	4,235 VA	125% OF CONNECTED
RECEPT:	360 VA	360 VA	PER NEC 220.44
MISC:	28,520 VA	28,520 VA	100% OF CONNECTED
HEATING	0 VA	0 VA	100% OF CONNECTED
COOLING:	0 VA	0 VA	100% OF CONNECTED
MOTORS:	100 VA	125 VA	CONNECTED PLUS 25% OF LARGEST MOTOR
TOTALS:	32,368 VA 135 AMPS	33,240 VA 139 AMPS	

NOTES:
THE STANDARD ESC HAS THREE PHASE PANELBOARD THIS SITE WILL REQUIRE THE ELECTRICAL CONTRACTOR TO BUY SINGLE PHASE PANELBOARDS DO TO A SINGLE PHASE SERVICE IS ALL THAT IS AVAILABLE.

PANELBOARD

MAIN GANTRY

MAINS: 200A, MAIN CKT BRKR

VOLTAGE: 240/480 1Ø, 60 HZ

NORMAL DISTRIBUTION SYSTEM

AVAILABE FAULT CURRENT: 18,000 AMPS

EQUIPMENT RATING: 22 KAIC SYMMETRICAL (RMS)

LOCATION:

PANEL MOUNTIING: SURFACE NEMA-1 ENCLOSURE IN NEMA-3R INTERGRATED ENCLOSURE

CKT	LOAD DESCRIPTION	C/B & ACC	LOAD	WIRE & CONDUIT	PHASE	WIRE & CONDUIT	LOAD	C/B & ACC	LOAD DESCRIPTION	CKT
1	MAIN LANE GANTRY SIDE 1	125/2	17320	2#1/0,#6GND,1-1/4"C	A	2#3/0,#6 GND,2"C	16720	125/2	MAIN LANE GANTRY SIDE 2	2
3			17320		B		15648			4
5		20/1	0		A		0	20/1		6
7		20/1	0		B		0	20/1		8
9		20/1	0		A		0	20/1		10
11		20/1	0		B		0	20/1		12

CKT BREAKER ACCESSORIES:

- G: GFCI (5MA TRIP)
- H: HACR-RATED BREAKER
- L: LOCKING HANDLE
- M: MOTOR OPERATOR
- S: SHUNT-TRIP
- SW: SWITCHING-DUTY

CONNECTED LOAD PER PHASE

ØA:	34,040 VA
ØB:	32,696 VA
	66,736 VA
	139 AMPS

LOAD SUMMARY

LOAD TYPE	CONNECTED	DESIGN	DESIGN BASIS
LIGHTING:	6,776 VA	8,470 VA	125% OF CONNECTED
RECEPT:	720 VA	720 VA	PER NEC 220.44
MISC:	59,040 VA	59,040 VA	100% OF CONNECTED
HEATING	0 VA	0 VA	100% OF CONNECTED
COOLING:	0 VA	0 VA	100% OF CONNECTED
MOTORS:	200 VA	250 VA	CONNECTED PLUS 25% OF LARGEST MOTOR
TOTALS:	66,736 VA 139 AMPS	68,480 VA 143 AMPS	

NOTES:
THE STANDARD ESC HAS THREE PHASE PANELBOARD THIS SITE WILL REQUIRE THE ELECTRICAL CONTRACTOR TO BUY SINGLE PHASE PANELBOARDS DO TO A SINGLE PHASE SERVICE IS ALL THAT IS AVAILABLE.

NO.	DATE	REVISION	APPROV.

CORRIDOR NAME

NTTA®
NORTH TEXAS TOLLWAY AUTHORITY

ELECTRICAL PANEL SCHEDULES

SHEET 11 OF 29

COMPANY LOGO

SECTION

DRAWN CAS DATE 02/08 DESIGNED RDW DATE 02/08
CHECKED RDW DATE 02/08 SCALE NONE

CONTRACT NO. XXXXX-XXX-XX-XX-XX SHEET ___ OF ___

8:09:39 AM

$$$REFLOC$$$10 $$$REFLOC$$$08 $$$REFLOC$$$06 $$$REFLOC$$$04 $$$REFLOC$$$02
$$$REFLOC$$$09 $$$REFLOC$$$07 $$$REFLOC$$$05 $$$REFLOC$$$03 $$$REFLOC$$$01
rkinyua 1.0000 ft / IN. 7/2/2008 8:09:39 AM \\dalw00\projects\42436\Maintenance\RESM\B28BRESM10.dgn

PANELBOARD

ETC MAIN GANTRY

NORMAL DISTRIBUTION SYSTEM

LOCATION:

MAINS: 100A MAIN CKT BRKR

VOLTAGE: 208Y120, 60 HZ

EQUIPMENT RATING: 10 KAIC SYMMETRICAL (RMS)

PANEL MOUNTING: SURFACE, NEMA-3R ENCLOSURE

BREAKER MOUNTING: BOLT-ON

CKT	LOAD DESCRIPTION	C/B & ACC	LOAD	WIRE & CONDUIT	PHASE	WIRE & CONDUIT	LOAD	C/B & ACC	LOAD DESCRIPTION	CKT
1	ILP CABINET	20/1	1920	2#12,#12 GND,3/4"C	A	2#12,#12 GND,3/4"C	1200	20/1	NETWORK CABINET	2
3	ILP CABINET AC	20/1	1200	2#12,#12 GND,3/4"C	B	2#12,#12 GND,3/4"C	1200	20/1	NETWORK CABINET AC	4
5	VES CABINET	20/1	1680	2#12,#12 GND,3/4"C	C	2#12,#12 GND,3/4"C	400	20/1	COLUMN WALL WASH LIGHTING	6
7	VES CABINET AC	20/1	1200	2#12,#12 GND,3/4"C	A	2#12,#12 GND,3/4"C	800	20/1	SECURITY PTZ CAMERA	8
9	VES CAMERA BOX FRONT	20/1	1080	2#12,#12 GND,3/4"C	B	2#12,#12 GND,3/4"C	180	20/1	GFI RECEPTACLE	10
11	VES CAMERA BOX REAR	20/1	1080	2#12,#12 GND,3/4"C	C	2#12,#12 GND,3/4"C	1560	20/1	SECURITY CABINET AC	12
13	VES CAMERA BOX FRONT	20/1	1080	2#12,#12 GND,3/4"C	A	2#12,#12 GND,3/4"C	1200	20/1	SECURITY CABINET	14
15	VES CAMERA BOX REAR	20/1	1080	2#12,#12 GND,3/4"C	B	2#12,#12 GND,3/4"C	100	20/1	LIGHTING CONTACTOR PANEL	16
17	COLUMN WALL WASH LIGHTING	20/1	250	2#12,#12 GND,3/4"C	C	2#12,#12 GND,3/4"C	600	20/1	NTTA LOGO SIGN	18
19	LIGHTING	20/1	70	2#12,#12 GND,3/4"C	A					20
21	ATS CONTROLS AND HEATER	20/1	600	2#12,#12 GND,3/4"C	B					22
23										24
25										26
27										28
29										30
31										32
33										34
35										36
37										38
39										40
41										42

CKT BREAKER ACCESSORIES:

- G: GFCI (5MA TRIP)
- H: HACR-RATED BREAKER
- L: LOCKING HANDLE
- M: MOTOR OPERATOR
- S: SHUNT-TRIP
- SW: SWITCHING-DUTY

CONNECTED LOAD PER PHASE

ØA:	7,470 VA
ØB:	5,440 VA
ØC	5,570 VA
	18,480 VA
	51 AMPS

LOAD SUMMARY

LOAD TYPE	CONNECTED	DESIGN	DESIGN BASIS
LIGHTING:	1,320 VA	1,650 VA	125% OF CONNECTED
RECEPT:	180 VA	180 VA	PER NEC 220.44
MISC:	11,220 VA	11,220 VA	100% OF CONNECTED
HEATING	600 VA	600 VA	100% OF CONNECTED
COOLING:	5,160 VA	5,550 VA	CONNECTED PLUS 25% OF LARGEST UNIT
MOTORS:	0 VA	0 VA	100% OF CONNECTED
TOTALS:	18,480 VA	19,200 VA	
	51 AMPS	53 AMPS	

NOTES:

PANELBOARD

COMMUNICATION HUT

NORMAL DISTRIBUTION SYSTEM

LOCATION: PART OF A 15 KVA MINI POWER ZONE

MAINS: 70A MAIN CKT BRKR

VOLTAGE: 120/240/1Ø, 60 HZ

AVAILABLE FAULT CURRENT: 8,000 AMPS

EQUIPMENT RATING: 10 KAIC SYMMETRICAL (RMS)

PANEL MOUNTING: SURFACE, NEMA-1 ENCLOSURE

CKT	LOAD DESCRIPTION	C/B & ACC	LOAD	WIRE & CONDUIT	PHASE	WIRE & CONDUIT	LOAD	C/B & ACC	LOAD DESCRIPTION	CKT
1	A/C WITH HEATER	20/1	1200	2#12,#12GND,3/4"C	A	2#12,#12GND,3/4"C	1800	20/1	DATA SYSTEM	2
3	RECEPTACLE	20/1	1200	2#12,#12GND,3/4"C	B	2#12,#12GND,3/4"C	1200	20/1	INDOOR LIGHTING	4
5	RECEPTACLE	20/1	1200	2#12,#12GND,3/4"C	A	2#12,#12GND,3/4"C	192	20/1	RECEPTACLE	6
7	OUTDOOR LIGHTING	20/1	200	2#12,#12GND,3/4"C	B	2#12,#12GND,3/4"C	0	20/1	SPARE	8
9	SPARE	20/1	0		A		0	30/2	LG-30R	10
11	SPARE	20/1	0	2#12,#12GND,3/4"C	B	2#12,#12GND,3/4"C	0			12

CKT BREAKER ACCESSORIES:

- G: GFCI (5MA TRIP)
- H: HACR-RATED BREAKER
- L: LOCKING HANDLE
- M: MOTOR OPERATOR
- S: SHUNT-TRIP
- SW: SWITCHING-DUTY

CONNECTED LOAD PER PHASE

ØA:	4,392 VA
ØB:	2,600 VA
	6,992 VA
	29 AMPS

LOAD SUMMARY

LOAD TYPE	CONNECTED	DESIGN	DESIGN BASIS
LIGHTING:	392 VA	490 VA	125% OF CONNECTED
RECEPT:	0 VA	0 VA	PER NEC 220.44
MISC:	5,400 VA	5,400 VA	100% OF CONNECTED
HEATING	0 VA	0 VA	100% OF CONNECTED
COOLING:	1,200 VA	1,500 VA	CONNECTED PLUS 25% OF LARGEST UNIT
MOTORS:	0 VA	0 VA	100% OF CONNECTED
TOTALS:	6,992 VA	7,390 VA	
	29 AMPS	31 AMPS	

NOTES:

PANELBOARD

ETC GANTRY

NORMAL DISTRIBUTION SYSTEM

LOCATION:

MAINS: 125A MAIN CKT BRKR

VOLTAGE: 120/240/1Ø, 60 HZ

AVAILABLE FAULT CURRENT: 8,000 AMPS

EQUIPMENT RATING: 10 KAIC SYMMETRICAL (RMS)

PANEL MOUNTING: SURFACE, NEMA-1 ENCLOSURE IN NEMA-3R INTERGRATED ENCLOSURE

CKT	LOAD DESCRIPTION	C/B & ACC	LOAD	WIRE & CONDUIT	PHASE	WIRE & CONDUIT	LOAD	C/B & ACC	LOAD DESCRIPTION	CKT
1	ILP CABINET	20/1	1920	2#12,#12 GND,3/4"C	A	2#12,#12 GND,3/4"C	1200	20/1	NETWORK CABINET	2
3	ILP CABINET AC	20/1	1920	2#12,#12 GND,3/4"C	B	2#12,#12 GND,3/4"C	1200	20/1	NETWORK CABINET AC	4
5	VES CABINET	20/1	1680	2#12,#12 GND,3/4"C	A	2#12,#12 GND,3/4"C	400	20/1	COLUMN WALL WASH LIGHTING	6
7	VES CABINET AC	20/1	1200	2#12,#12 GND,3/4"C	B	2#12,#12 GND,3/4"C	800	20/1	SECURITY PTZ CAMERA	8
9	VES CAMERA BOX FRONT	20/1	1080	2#12,#12 GND,3/4"C	A	2#12,#12 GND,3/4"C	180	20/1	GFI RECEPTACLE	10
11	VES CAMERA BOX REAR	20/1	1080	2#12,#12 GND,3/4"C	B	2#12,#12 GND,3/4"C	1560	20/1	SECURITY CABINET AC	12
13	VES CAMERA BOX FRONT	20/1	1080	2#12,#12 GND,3/4"C	A	2#12,#12 GND,3/4"C	1200	20/1	SECURITY CABINET	14
15	VES CAMERA BOX REAR	20/1	1080	2#12,#12 GND,3/4"C	B	2#12,#12 GND,3/4"C	100	20/1	LIGHTING CONTACTOR PANEL	16
17	COLUMN WALL WASH LIGHTING	20/1	250	2#12,#12 GND,3/4"C	A	2#12,#12 GND,3/4"C	600	20/1	NTTA LOGO SIGN	18
19	LIGHTING	20/1	70	2#12,#12 GND,3/4"C	B		0	20/1		20
21	ATS CONTROLS AND HEATER	20/1	600	2#12,#12 GND,3/4"C	A		0	20/1		22
23		20/1	0		B		0	20/1		24

CKT BREAKER ACCESSORIES:

- G: GFCI (5MA TRIP)
- H: HACR-RATED BREAKER
- L: LOCKING HANDLE
- M: MOTOR OPERATOR
- S: SHUNT-TRIP
- SW: SWITCHING-DUTY

CONNECTED LOAD PER PHASE

ØA:	10,190 VA
ØB:	8,290 VA
	18,480 VA
	77 AMPS

LOAD SUMMARY

LOAD TYPE	CONNECTED	DESIGN	DESIGN BASIS
LIGHTING:	1,320 VA	1,650 VA	125% OF CONNECTED
RECEPT:	180 VA	180 VA	PER NEC 220.44
MISC:	11,220 VA	11,220 VA	100% OF CONNECTED
HEATING	600 VA	600 VA	100% OF CONNECTED
COOLING:	5160 VA	5,550 VA	CONNECTED PLUS 25% OF LARGEST UNIT
MOTORS:	0 VA	0 VA	100% OF CONNECTED
TOTALS:	18,480 VA	19,200 VA	
	77 AMPS	80 AMPS	

NOTES:

NO.	DATE	REVISION	APPROV.

CORRIDOR NAME

NTTA® NORTH TEXAS TOLLWAY AUTHORITY

ELECTRICAL PANEL SCHEDULES

SHEET 12 OF 29

COMPANY LOGO

SECTION

DRAWN CAS DATE 02/08 DESIGNED RDW DATE 02/08
CHECKED RDW DATE 02/08 SCALE NONE

CONTRACT NO. XXXXX-XXX-XX-XX-XX SHEET ___ OF ___

8:10:15 AM

$$$REFLOC$$$10 $$$REFLOC$$$08 $$$REFLOC$$$06 $$$REFLOC$$$04 $$$REFLOC$$$02
$$$REFLOC$$$09 $$$REFLOC$$$07 $$$REFLOC$$$05 $$$REFLOC$$$03 $$$REFLOC$$$01
rkinyua 8:10:15 AM
1.0000 ft / IN.
7/2/2008 \\dalw00\projects\42436\Maintenance\RESM\B28BRESM11.dgn

ELECTRICAL GROUND BOX SCHEDULE

SHEET NO.	BOX NO.	BOX TYPE	STATION	OFFSET	
1	E1	TY D	1105+50	100'	RT
1	E2	TY D	1108+88	99'	RT
1	E3	TY D	1111+60	117'	LT
2	E4	TY D	1116+41	116'	RT
2	E5	TY D	1118+00	150'	RT
2	E6	TY D	1118+40	100'	RT
2	E7	TY D	1121+20	98'	RT
2	E8	TY D	1118+03	144'	LT
2	E9	TY D	1120+74	177'	LT
2	E10	TY D	1120+88	147'	LT
3	E11	TY D	1124+57	168'	LT
3	E12	TY D	1128+39	185'	LT
3	E13	TY D	1129+49	239'	LT
3	E14	TY D	1129+71	185'	LT
3	E15	TY D	1133+14	175'	LT
3	E16	TY D	1133+23	179'	LT
3	E17	TY D	1133+00	115'	LT
4	E18	TY D	1124+00	96'	RT
4	E19	TY D	1124+28	144'	RT
4	E20	TY D	1128+50	97'	RT
4	E21	TY D	1129+30	157'	RT
4	E22	TY D	1132+69	130'	RT
4	E23	TY D	1133+00	130'	RT
4	E24	TY D	1133+36	180'	RT
5	E25	TY D	1137+46	233'	LT
5	E26	TY D	1137+46	185'	LT
5	E27	TY D	1137+60	177'	LT
5	E28	TY D	1137+64	139'	LT
5	E29	TY D	1139+14	97'	LT
5	E30	TY D	1143+02	146'	LT
5	E31	TY D	1144+13	151'	LT
5	E32	TY D	1138+34	131'	RT
5	E33	TY D	1138+38	139'	RT
5	E34	TY D	1138+32	136'	RT
5	E35	TY D	1138+32	172'	RT
5	E36	TY D	1138+34	174'	RT
5	E37	TY D	1138+38	177'	RT
5	E38	TY D	1138+46	173'	RT
5	E39	TY D	1140+68	174'	RT
5	E40	TY D	1141+73	131'	RT
5	E41	TY D	1136+94	178'	RT
5	E42	TY D	1136+94	228'	RT
6	E43	TY D	1151+53	90'	LT
6	E44	TY D	1156+29	92'	LT
6	E45	TY D	1157+72	90'	LT
6	E46	TY D	1121+86	107'	RT
6	E47	TY D	1155+96	164'	RT
6	E48	TY D	1156+20	97'	RT
6	E49	TY D	1157+74	142'	RT
6	E50	TY D	1158+92	126'	RT

ELECTRICAL GROUND BOX SCHEDULE CONT.

SHEET NO.	BOX NO.	BOX TYPE	STATION	OFFSET	
7	E51	TY D	1161+00	92'	LT
7	E52	TY D	1165+39	89'	LT
7	E53	TY D	1170+04	87'	LT
7	E54	TY D	1170+76	85'	LT
7	E55	TY D	1160+82	92'	RT
7	E56	TY D	1160+85	180'	RT
7	E57	TY D	1164+92	161'	RT
7	E58	TY D	1165+40	92'	RT
7	E59	TY D	1169+49	95'	RT
7	E60	TY D	1169+79	144'	RT
7	E61	TY D	1169+95	92'	RT
7	E62	TY D	1170+15	136'	RT
8	E63	TY D	1171+00	122'	LT
8	E64	TY D	1175+38	92'	LT
8	E65	TY D	1175+49	92'	LT
8	E66	TY D	1172+94	120'	RT
9	E67	TY D	1184+22	93'	LT
9	E68	TY D	1184+25	0'	LT
9	E69	TY D	1184+39	92'	RT
12	E70	TY D	1225+66	143'	LT
12	E71	TY D	1225+77	143'	LT
12	E72	TY D	1225+71	100'	LT
12	E73	TY D	1230+73	126'	LT
12	E74	TY D	1220+36	125'	RT
12	E75	TY D	1220+36	129'	RT
12	E76	TY D	1225+52	164'	RT
12	E77	TY D	1225+72	164'	RT
12	E78	TY D	1225+65	119'	RT
12	E79	TY D	1229+99	100'	RT
12	E80	TY D	1229+99	106'	RT
12	E81	TY D	1229+98	113'	RT
12	E82	TY D	1230+28	178'	RT

ITS GROUND BOX SCHEDULE

SHEET NO.	BOX NO.	BOX TYPE	STATION	OFFSET	
1	C1	TY FO	1104+90	106'	LT
2	C2	TY FO	1112+50	108'	LT
2	C3	TY FO	1120+67	172.25'	LT
2	C4	TY FO	1120+79	141.25'	LT
2	C5	TY FO	1120+99	92'	LT
3	C6	TY FO	1129+42	208'	LT
3	C7	TY FO	1129+62	178'	LT
3	C8	TY FO	1132+62	178'	LT
3	C9	TY FO	1133+05	110'	LT
4	C10	TY FO	1133+05	128'	RT
4	C11	TY FO	1133+05	88'	RT
5	C12	TY FO	1137+00	90'	LT
5	C13	TY FO	1137+00	88'	RT
5	C14	TY FO	1139+15	98'	LT
5	C15	TY FO	1138+26	126'	RT
5	C16	TY FO	1142+00	126'	RT
6	C17	TY FO	1151+12	116'	RT
7	C18	TY FO	1163+00	96'	RT
7	C19	TY FO	1170+00	97'	RT
7	C20	TY FO	1170+20	132'	RT
8	C21	TY FO	1172+98	116'	RT
9	C22	TY FO	1184+00	98'	RT
12	C23	TY FO	1222+70	148'	RT
12	C24	TY FO	1223+50	154'	RT
12	C25	TY FO	1223+50	110'	RT
12	C26	TY FO	1225+50	110'	RT
12	C27	TY FO	1225+50	10'	RT
12	C28	TY FO	1225+50	94.5'	LT
12	C29	TY FO	1230+50	120'	LT

NO.	DATE	REVISION	APPROV.

CORRIDOR NAME

NTTA®
NORTH TEXAS TOLLWAY AUTHORITY

ELECTRICAL SUMMARY

SHEET 13 OF 29

COMPANY LOGO

SECTION

DRAWN CAS DATE 02/08 DESIGNED RDW DATE 02/08
CHECKED RDW DATE 02/08 SCALE NONE

CONTRACT NO. XXXXX-XXX-XX-XX-XX SHEET ___ OF ___

$$$REFLOG$$$10 .....
$$$REFLOG$$$08 .....
$$$REFLOG$$$06 .....
$$$REFLOG$$$04 .....
$$$REFLOG$$$02 .....
$$$REFLOG$$$09 .....
$$$REFLOG$$$07 .....
$$$REFLOG$$$05 .....
$$$REFLOG$$$03 .....
$$$REFLOG$$$01 .....
rkinyua
1.0000 ft / IN.
7/2/2008 8:19:38 AM
\\dalw00\projects\42436\Maintenance\RESM\B28BRESM12.dgn

ITS CONDUIT AND CONDUCTOR RUN CHART

CONDUIT RUN NUMBER	MULTIDUCT (PVC) (4–1.25" DUCT) (FEET)	MULTIDUCT (PVC) (3–1.25" DUCT) (FEET)	MULTIDUCT (FIBERGLASS) (4–1.25" DUCT) (FEET)
SHEET 1			
C1	143	–	360
C2	–	203	–
C3	800	–	–
SHEET 1 TOTALS	943	203	360
SHEET 2			
C4	50	–	–
C5	822	–	–
C6	34	–	–
C7	320	–	–
C8	53	–	–
C9	301	–	–
SHEET 2 TOTALS	1580	0	0
SHEET 3			
C10	560	–	–
C11	37	–	–
C12	300	–	–
C13	900	–	–
C14	–	92	–
C15	195	–	–
SHEET 3 TOTALS	1992	92	0
SHEET 4			
C16	–	40	–
C17	300	–	–
SHEET 4 TOTALS	300	40	0
SHEET 5			
C18	100	–	–
C19	85	–	–
C20	55	–	–
C21	392	–	–
C22	530	–	–
C23	178	–	–
C24	215		
SHEET 5 TOTALS	1555	0	0
SHEET 6			
C25	450	–	–
C26	–	11	–
C27	800	–	–
SHEET 6 TOTALS	1250	11	0
SHEET 7			
C28	400	–	–
C29	695	–	–
C30	50	–	–
C31	80	–	–
SHEET 7 TOTALS	1225	0	0
SHEET 8			
C32	200	–	–
C33	230	–	–
C34	–	14	–
C35	770	–	–
C36	–	225	
SHEET 8 TOTALS	1200	239	0

ITS CONDUIT AND CONDUCTOR RUN CHART CONT.

CONDUIT RUN NUMBER	MULTIDUCT (PVC) (4–1.25" DUCT) (FEET)	MULTIDUCT (PVC) (3–1.25" DUCT) (FEET)	MULTIDUCT (FIBERGLASS) (4–1.25" DUCT) (FEET)
SHEET 9			
C37	100	–	–
C38	60	–	808
C39	–	–	245
SHEET 9 TOTALS	160	0	1053
SHEET 10			
C40	–	–	560
C41	–	–	640
SHEET 10 TOTALS	0	0	1200
SHEET 11			
C42	–	–	175
C43	–	–	805
C44	–	–	220
SHEET 11 TOTALS	0	0	0
SHEET 12			
C45	42	–	–
C46	80	–	–
C47	45	–	–
C48	200	–	–
C49	100	–	–
C50	105	–	–
C51	502	–	–
SHEET 12 TOTALS	1074	0	330
SHEET 2			
TOTALS	3925	225	3783

NO.	DATE	REVISION	APPROV.

CORRIDOR NAME

NTTA®
NORTH TEXAS TOLLWAY AUTHORITY

ELECTRICAL SUMMARY

SHEET 14 OF 29

COMPANY LOGO | SECTION

DRAWN CAS DATE 02/08 DESIGNED RDW DATE 02/08
CHECKED RDW DATE 02/08 SCALE NONE

CONTRACT NO. XXXXX-XXX-XX-XX-XX SHEET ___ OF ___

$$$REFLOC$$$10 .....
$$$REFLOC$$$08 .....
$$$REFLOC$$$06 .....
$$$REFLOC$$$04 .....
$$$REFLOC$$$02 .....
$$$REFLOC$$$09 .....
$$$REFLOC$$$07 .....
$$$REFLOC$$$05 .....
$$$REFLOC$$$03 .....
$$$REFLOC$$$01 .....
rkinyua
1.0000 ft / IN.
7/2/2008 8:20:38 AM
\\dalw00\projects\42436\Maintenance\RESM\B28BRESM13.dgn
8:20:38 AM

ELECTRICAL CONDUIT AND CONDUCTOR RUN CHART

CONDUIT RUN NUMBER	CONDUIT		GROUND		CONDUCTOR		
	2" PVC (SCH 40) (FEET)	3" PVC (SCH 40) (FEET)	#6 BARE CONDUCTOR (FEET) 1 GROUND	#10 BARE CONDUCTOR (FEET) 1 GROUND	#2 INSUL CONDUCTOR (FEET) 2 HOT	#3/0 INSUL CONDUCTOR (FEET) 2 HOT	#4 INSUL CONDUCTOR (FEET) 2 HOT
SHEET 1							
E1	58	–	–	58	–	–	116
E2	338	–	–	338	–	–	676
E3	310	–	–	310	–	–	620
E4	30	–	30	–	60	–	–
E5	35	–	35	–	70	–	–
SHEET 1 TOTALS	771	0	65	706	130	0	1412
SHEET 2							
E6	600	–	600	–	1200	–	–
E7	30	–	30	–	60	–	–
E8	265	–	265	–	530	–	–
E9	35	–	35	–	70	–	–
E10	310	–	31	–	620	–	–
E11	140	–	–	140	–	–	280
E12	460	–	–	460	–	–	920
E13	60	–	–	60	–	–	120
E14	280	–	–	280	–	–	560
E15	280	–	–	280	–	–	560
SHEET 2 TOTALS	1580	0	1240	1220	2480	0	2440
SHEET 3							
E16	55	–	55	–	110	–	–
E17	170	–	170	–	340	–	–
E18	375	–	375	–	750	–	–
E19	195	–	195	–	390	–	–
E20	110	–	110	–	220	–	–
E21	60	–	60	–	120	–	–
E22	325	–	325	–	650	–	–
E23	25	–	25	–	50	–	–
E24	270	–	270	–	540	–	–
E25	285	–	285	–	570	–	–
E26	84	–	–	84	–	–	168
E27	115	–	–	115	–	–	230
SHEET 3 TOTALS	2069	92	1870	199	3740	0	398
SHEET 4							
E28	450	–	–	450	–	–	900
E29	40	–	40	–	80	–	–
E30	500	–	500	–	1000	–	–
E31	210	–	210	–	420	–	–
E32	450	–	–	450	–	–	900
E33	400	–	400	–	800	–	–
E34	150	–	–	150	–	–	300
E35	45	–	45	–	90	–	–
E36	230	–	–	230	–	–	460
E37	265	–	265	–	530	–	–
E38	140	–	140	–	280	–	–
E39	235	–	–	235	–	–	470
E40	40	–	40	–	80	–	–
E41	65	–	–	65	–	–	130
E42	65	–	65	–	130	–	–
E43	65	–	65	–	130	–	–
E44	65	–	65	–	130	–	–
E45	–	70	70	–	–	140	–
SHEET 4 TOTALS	3415	70	1905	1580	3670	140	3160

ELECTRICAL CONDUIT AND CONDUCTOR RUN CHART

CONDUIT RUN NUMBER	CONDUIT		GROUND		CONDUCTOR		
	2" PVC (SCH 40) (FEET)	3" PVC (SCH 40) (FEET)	#6 BARE CONDUCTOR (FEET) 1 GROUND	#10 BARE CONDUCTOR (FEET) 1 GROUND	#2 INSUL CONDUCTOR (FEET) 2 HOT	#3/0 INSUL CONDUCTOR (FEET) 2 HOT	#4 INSUL CONDUCTOR (FEET) 2 HOT
SHEET 5							
E46	150	–	150	–	300	–	–
E47	150	–	150	–	300	–	–
E48	150	–	150	–	300	–	–
E49	–	145	145	–	–	290	–
E50	–	55	55	–	–	110	–
E51	–	15	15	–	–	30	–
E52	45	–	45	–	90	–	–
E53	45	–	45	–	90	–	–
E54	45	–	45	–	90	–	–
E55	135	–	135	–	270	–	–
E56	375	–	375	–	750	–	–
E57	505	–	505	–	1010	–	–
E58	505	–	505	–	1010	–	–
E59	10	–	10	–	20	–	–
E60	10	–	10	–	20	–	–
E61	10	–	10	–	20	–	–
E62	70	–	70	–	140	–	–
E63	15	–	15	–	30	–	–
E64	70	–	70	–	140	–	–
E65	85	–	85	–	170	–	–
E66	80	–	80	–	160	–	–
E67	80	–	80	–	160	–	–
E68	85	–	85	–	170	–	–
E69	70	–	70	–	140	–	–
E70	235	–	235	–	470	–	–
E71	240	–	240	–	480	–	–
E72	250	–	250	–	500	–	–
E73	235	–	–	235	–	–	470
E74	–	100	100	–	–	200	–
E75	–	50	50	–	–	100	–
E76	–	60	60	–	–	120	–
E77	60	–	–	60	–	–	120
E78	15	–	–	15	–	–	30
E79	45	–	45	–	90	–	–
E80	40	–	40	–	80	–	–
E81	310	–	310	–	620	–	–
E82	355	–	355	–	710	–	–
SHEET 1 TOTALS	4475	425	4590	310	8330	850	620

NO.	DATE	REVISION	APPROV.

CORRIDOR NAME

NTTA®
NORTH TEXAS TOLLWAY AUTHORITY

ELECTRICAL SUMMARY

SHEET 15 OF 29

COMPANY LOGO

SECTION

DRAWN CAS DATE 02/08 DESIGNED RDW DATE 02/08
CHECKED RDW DATE 02/08 SCALE NONE

CONTRACT NO. XXXXX-XXX-XX-XX-XX SHEET ___ OF ___

8:21:13 AM

$$$$REFLOC$$$$10 ..... $$$$REFLOC$$$$08 ..... $$$$REFLOC$$$$06 ..... $$$$REFLOC$$$$04 ..... $$$$REFLOC$$$$02 .....
$$$$REFLOC$$$$09 ..... $$$$REFLOC$$$$07 ..... $$$$REFLOC$$$$05 ..... $$$$REFLOC$$$$03 ..... $$$$REFLOC$$$$01 .....
rkinyua
1.0000 ft / IN.
7/2/2008 8:21:13 AM
\\dalw00\projects\42436\Maintenance\RESM\B28BRESM14.dgn

ELECTRICAL CONDUIT AND CONDUCTOR RUN CHART

CONDUIT RUN NUMBER	CONDUIT		GROUND		CONDUCTOR		
	2" PVC (SCH 40) (FEET)	3" PVC (SCH 40) (FEET)	#6 BARE CONDUCTOR (FEET) 1 GROUND	#10 BARE CONDUCTOR (FEET) 1 GROUND	#2 INSUL CONDUCTOR (FEET) 2 HOT	#3/0 INSUL CONDUCTOR (FEET) 2 HOT	#4 INSUL CONDUCTOR (FEET) 2 HOT
SHEET 6							
E83	45	–	45	–	90	–	–
E84	460	–	460	–	920	–	–
E85	45	–	45	–	90	–	–
E86	65	–	–	65	–	–	130
E87	370	–	370	–	740	–	–
E88	450	–	–	450	–	–	900
E89	385	–	385	–	770	–	–
E90	205	–	205	–	410	–	–
E91	280	–	–	280	–	–	560
E92	45	–	45	–	90	–	–
E93	45	–	45	–	90	–	–
E94	180	–	180	–	360	–	–
E95	185	–	185	–	370	–	–
E96	185	–	185	–	370	–	–
E97	185	–	185	–	370	–	–
E98	185	–	185	–	370	–	–
E99	45	–	45	–	90	–	–
E100	45	–	45	–	90	–	–
E101	25	–	25	–	50	–	–
E102	25	–	25	–	50	–	–
E103	60	–	60	–	120	–	–
E104	105	–	105	–	210	–	–
E105	105	–	105	–	210	–	–
E106	60	–	60	–	120	–	–
E107	60	–	60	–	120	–	–
E108	105	–	105	–	210	–	–
E109	105	–	105	–	210	–	–
E110	40	–	40	–	80	–	–
E111	40	–	40	–	80	–	–
E112	40	–	40	–	80	–	–
E113	50	–	50	–	100	–	–
E114	50	–	50	–	100	–	–
E115	50	–	50	–	100	–	–
E116	30	–	30	–	60	–	–
E117	30	–	30	–	60	–	–
E118	30	–	30	–	60	–	–
E119	40	–	40	–	80	–	–
E120	40	–	40	–	80	–	–
E121	40	–	40	–	80	–	–
SHEET 6 TOTALS	4535	0	3740	795	7480	0	1590

ELECTRICAL CONDUIT AND CONDUCTOR RUN CHART

CONDUIT RUN NUMBER	CONDUIT		GROUND		CONDUCTOR		
	2" PVC (SCH 40) (FEET)	3" PVC (SCH 40) (FEET)	#6 BARE CONDUCTOR (FEET) 1 GROUND	#10 BARE CONDUCTOR (FEET) 1 GROUND	#2 INSUL CONDUCTOR (FEET) 2 HOT	#3/0 INSUL CONDUCTOR (FEET) 2 HOT	#4 INSUL CONDUCTOR (FEET) 2 HOT
SHEET 7							
E122	15	–	15	–	30	–	–
E123	435	–	435	–	870	–	–
E124	460	–	460	–	920	–	–
E125	15	–	15	–	30	–	–
E126	65	–	65	–	130	–	–
E127	65	–	65	–	130	–	–
E128	35	–	35	–	70	–	–
E129	35	–	35	–	70	–	–
E130	180	–	–	180	–	–	360
E131	190	–	190	–	380	–	–
E132	190	–	190	–	380	–	–
E133	190	–	190	–	380	–	–
E134	455	–	–	455	–	–	910
E135	415	–	415	–	830	–	–
E136	415	–	415	–	830	–	–
E137	415	–	415	–	830	–	–
E138	360	–	360	–	720	–	–
E139	360	–	360	–	720	–	–
E140	360	–	360	–	720	–	–
E141	455	–	–	455	–	–	910
E142	60	–	60	–	120	–	–
E143	60	–	60	–	120	–	–
E144	60	–	60	–	120	–	–
E145	55	–	–	55	–	–	110
E146	80	–	–	80	–	–	160
E147	120	–	120	–	240	–	–
E148	120	–	120	–	240	–	–
E149	120	–	120	–	240	–	–
SHEET 7 TOTALS	5785	0	4560	1225	9120	0	2450
SHEET 8							
E150	440	–	440	–	880	–	–
E151	400	–	400	–	800	–	–
E152	230	–	–	230	–	–	460
E153	40	–	40	–	80	–	–
E154	205	–	205	–	410	–	–
E155	205	–	205	–	410	–	–
E156	205	–	205	–	410	–	–
E157	205	–	205	–	410	–	–
E158	175	–	175	–	350	–	–
E159	380	–	380	–	760	–	–
E160	430	–	430	–	860	–	–
E161	375	–	375	–	750	–	–
E162	170	–	170	–	340	–	–
E163	255	–	255	–	510	–	–
E164	435	–	435	–	870	–	–
E165	185	–	–	185	–	–	370
E166	450	–	450	–	900	–	–
E167	260	–	–	260	–	–	520
E168	260	–	260	–	520	–	–
E169	190	–	190	–	380	–	–
E170	20	–	–	20	–	–	40
E171	20	–	20	–	40	–	–
E172	–	115	115	–	–	230	–
E173	–	25	25	–	–	50	–
E174	245	–	245	–	490	–	–
E175	425	–	425	–	850	–	–
E176	405	–	405	–	810	–	–
E177	150	–	150	–	300	–	–
E178	335	–	335	–	670	–	–
SHEET 8 TOTALS	7095	140	6540	695	12800	280	1390

NO.	DATE	REVISION	APPROV.

CORRIDOR NAME

NTTA®
NORTH TEXAS TOLLWAY AUTHORITY

ELECTRICAL SUMMARY

SHEET 16 OF 29

COMPANY LOGO

SECTION

DRAWN CAS DATE 02/08 DESIGNED RDW DATE 02/08
CHECKED RDW DATE 02/08 SCALE NONE

CONTRACT NO. XXXXX-XXX-XX-XX-XX SHEET ___ OF ___

8:23:01 AM

$$$REFLOC$$$10 ..... $$$REFLOC$$$08 ..... $$$REFLOC$$$06 ..... $$$REFLOC$$$04 ..... $$$REFLOC$$$02 .....
$$$REFLOC$$$09 ..... $$$REFLOC$$$07 ..... $$$REFLOC$$$05 ..... $$$REFLOC$$$03 ..... $$$REFLOC$$$01 .....
rkinyua
1.0000 ft / IN.
7/2/2008 8:23:01 AM
\\dalw00\projects\42436\Maintenance\RESM\B28BRESM15.dgn

ELECTRICAL CONDUIT AND CONDUCTOR RUN CHART

CONDUIT RUN NUMBER	CONDUIT		GROUND		CONDUCTOR		
	2" PVC (SCH 40) (FEET)	3" PVC (SCH 40) (FEET)	#6 BARE CONDUCTOR (FEET) 1 GROUND	#10 BARE CONDUCTOR (FEET) 1 GROUND	#2 INSUL CONDUCTOR (FEET) 2 HOT	#3/0 INSUL CONDUCTOR (FEET) 2 HOT	#4 INSUL CONDUCTOR (FEET) 2 HOT
SHEET 9							
E179	55	–	55	–	110	–	–
E180	120	–	120	–	240	–	–
E181	75	–	75	–	150	–	–
E182	145	–	145	–	290	–	–
E183	145	–	145	–	290	–	–
E184	65	–	65	–	130	–	–
E185	25	–	25	–	50	–	–
E186	25	–	25	–	50	–	–
E187	30	–	30	–	60	–	–
E188	30	–	30	–	60	–	–
E189	75	–	75	–	150	–	–
E190	135	–	135	–	270	–	–
E191	75	–	75	–	150	–	–
E192	125	–	125	–	250	–	–
E193	125	–	125	–	250	–	–
E194	185	–	185	–	370	–	–
E195	300	–	300	–	600	–	–
E196	415	–	415	–	830	–	–
E197	465	–	465	–	930	–	–
E198	456	–	456	–	912	–	–
E199	470	–	470	–	940	–	–
E200	470	–	470	–	940	–	–
E201	465	–	465	–	930	–	–
E202	240	–	240	–	480	–	–
E203	465	–	465	–	930	–	–
E204	355	–	355	–	710	–	–
E205	125	–	125	–	250	–	–
SHEET 7 TOTALS	5661	0	5661	0	11322	0	0
SHEET 10							
E206	115	–	115	–	230	–	–
E207	230	–	230	–	460	–	–
E208	345	–	345	–	690	–	–
E209	460	–	460	–	920	–	–
E210	465	–	465	–	930	–	–
E211	465	–	465	–	930	–	–
E212	465	–	465	–	930	–	–
E213	290	–	290	–	580	–	–
E214	175	–	175	–	350	–	–
E215	60	–	60	–	120	–	–
SHEET 8 TOTALS	3070	0	3070	0	6140	0	0
SHEET 11							
E216	170	–	170	–	340	–	–
E217	240	–	240	–	480	–	–
E218	400	–	400	–	800	–	–
E219	380	–	380	–	760	–	–
E220	380	–	380	–	760	–	–
E221	420	–	420	–	840	–	–
E222	375	–	375	–	750	–	–
E223	470	–	470	–	940	–	–
E224	570	–	570	–	1140	–	–
E225	525	–	525	–	1050	–	–
E226	560	–	560	–	1120	–	–
E227	335	–	335	–	670	–	–
E228	140	–	140	–	280	–	–
E229	45	–	45	–	90	–	–
E230	445	–	445	–	890	–	–
E231	120	–	120	–	240	–	–
SHEET 8 TOTALS	5575	0	5575	0	11150	0	0

ELECTRICAL CONDUIT AND CONDUCTOR RUN CHART

CONDUIT RUN NUMBER	CONDUIT		GROUND		CONDUCTOR		
	2" PVC (SCH 40) (FEET)	3" PVC (SCH 40) (FEET)	#6 BARE CONDUCTOR (FEET) 1 GROUND	#10 BARE CONDUCTOR (FEET) 1 GROUND	#2 INSUL CONDUCTOR (FEET) 2 HOT	#3/0 INSUL CONDUCTOR (FEET) 2 HOT	#4 INSUL CONDUCTOR (FEET) 2 HOT
SHEET 12							
E232	255	–	255	–	510	–	–
E233	185	–	185	–	370	–	–
E234	25	–	25	–	50	–	–
E235	180	–	180	–	360	–	–
E236	310	–	310	–	620	–	–
E237	250	–	250	–	500	–	–
E238	100	–	100	–	200	–	–
E239	35	–	35	–	70	–	–
E240	185	–	185	–	370	–	–
E241	310	–	310	–	620	–	–
E242	315	–	315	–	630	–	–
E243	170	–	170	–	340	–	–
E244	25	–	25	–	50	–	–
E245	175	–	175	–	350	–	–
E246	120	–	120	–	240	–	–
E247	240	–	240	–	480	–	–
E248	245	–	245	–	490	–	–
E249	80	–	80	–	160	–	–
E250	135	–	135	–	270	–	–
E251	90	–	90	–	180	–	–
E252	25	–	25	–	50	–	–
E253	100	–	100	–	200	–	–
E254	20	–	20	–	40	–	–
E255	250	–	250	–	500	–	–
E256	235	–	235	–	470	–	–
E257	–	70	70	–	–	140	–
E258	–	55	55	–	–	110	–
E259	–	525	525	–	–	1050	–
E260	25	–	25	–	50	–	–
E261	130	–	130	–	260	–	–
E262	280	–	280	–	560	–	–
E263	125	–	125	–	250	–	–
E264	275	–	275	–	550	–	–
E265	55	–	55	–	110	–	–
E266	55	–	55	–	110	–	–
E267	10	–	10	–	20	–	–
E268	20	–	20	–	40	–	–
E269	160	–	160	–	320	–	–
E270	455	–	455	–	910	–	–
E271	345	–	345	–	690	–	–
E272	305	–	305	–	610	–	–
E273	105	–	105	–	210	–	–
E274	70	–	70	–	140	–	–
E275	70	–	70	–	140	–	–
E276	70	–	70	–	140	–	–
E277	55	–	55	–	110	–	–
E278	55	–	55	–	110	–	–
E279	55	–	55	–	110	–	–
E280	430	–	430	–	860	–	–
E281	430	–	430	–	860	–	–
E282	430	–	430	–	860	–	–
E283	205	–	205	–	410	–	–
E284	255	–	255	–	510	–	–
E285	255	–	255	–	510	–	–
E286	255	–	255	–	510	–	–
E287	255	–	255	–	510	–	–
E288	501	–	501	–	1002	–	–
SHEET 12 TOTALS	9796	650	10446	0	19592	1300	0
TOTALS							
TOTALS	11381	720	11706	395	21972	1440	790

NO.	DATE	REVISION	APPROV.

CORRIDOR NAME

NTTA®
NORTH TEXAS TOLLWAY AUTHORITY

ELECTRICAL SUMMARY

SHEET 17 OF 29

COMPANY LOGO

SECTION

DRAWN CAS DATE 02/08 DESIGNED RDW DATE 02/08
CHECKED RDW DATE 02/08 SCALE NONE

CONTRACT NO. XXXXX-XXX-XX-XX-XX SHEET ___ OF ___

8:23:36 AM

$$$$REFLOG$$$$10 .....
$$$$REFLOG$$$$08 .....
$$$$REFLOG$$$$06 .....
$$$$REFLOG$$$$04 .....
$$$$REFLOG$$$$02 .....
$$$$REFLOG$$$$09 .....
$$$$REFLOG$$$$07 .....
$$$$REFLOG$$$$05 .....
$$$$REFLOG$$$$03 .....
$$$$REFLOG$$$$01 .....
rkinyua
1.0000 ft / IN.
7/2/2008 8:23:36 AM
\\dalw00\projects\42436\Maintenance\RESM\B28BRESM16.dgn

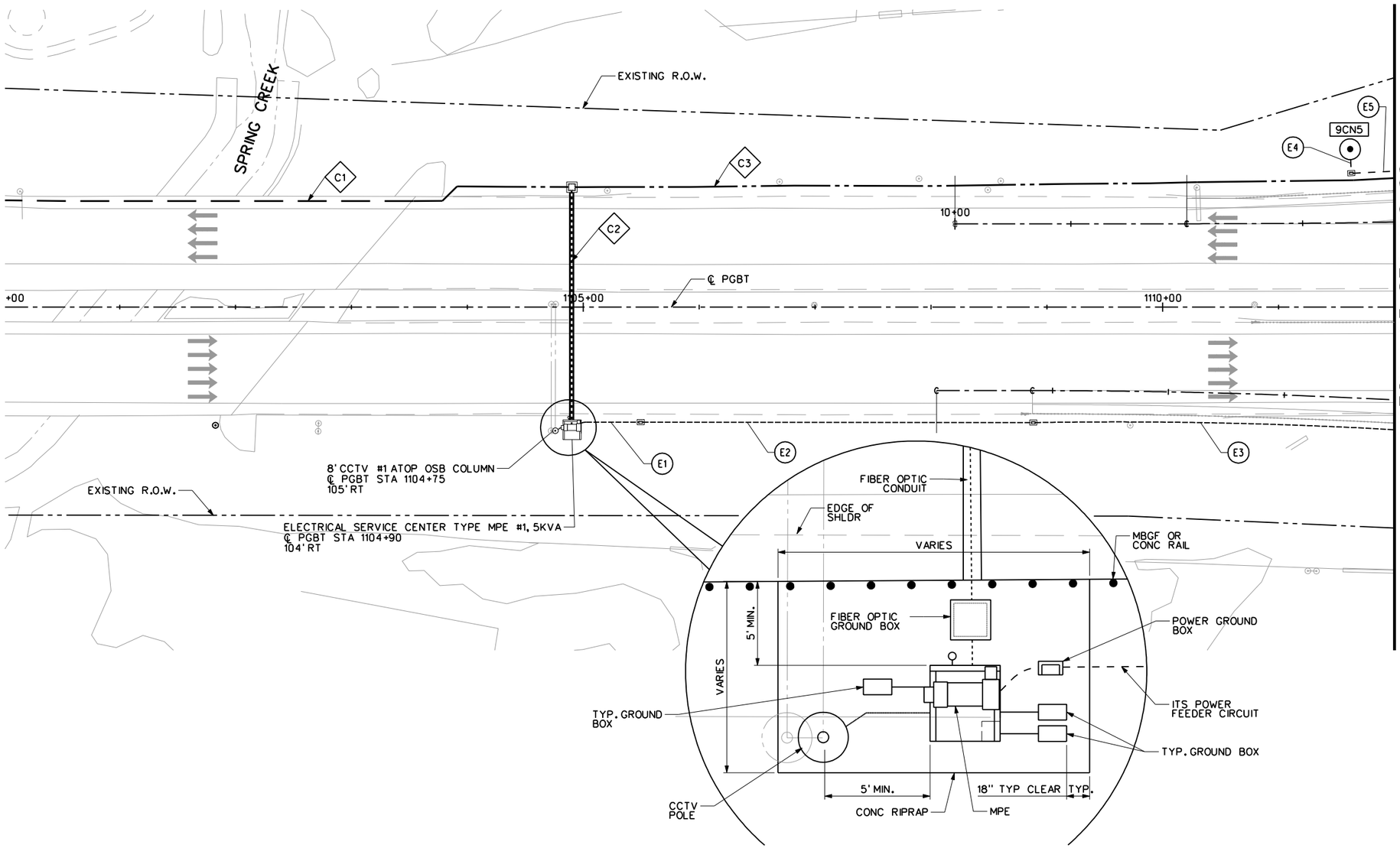

ELECTRICAL SERVICE CENTER TYPE MPE #1, 5KVA

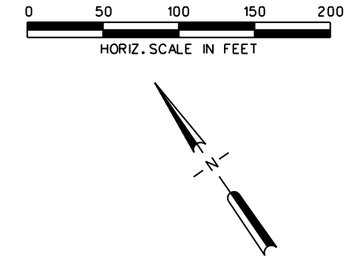

NOTES:

1) 8' CCTV #1 MOUNTED ATOP OSB SQUARE COLUMN WILL BE PAID UNDER ITEM 650.

2) REFER TO CCTV #1 CAMERA ON OSB COLUMN DETAIL SHEET.

3) REFER TO NTTA STANDARD ESC-003(1)-2007 FOR MORE INFORMATION ON ESC TYPE MPE.

4) REFER TO FOUNDATION LAYOUT SHEETS FOR MORE INFORMATION.

ELECTRICAL SHEET SUMMARY 1 OF 12

ITEM NO.	DESC.	ITEM DESCRIPTION	UNIT	TOTAL
0618	2018	CONDUIT (PVC) (SCHD 40) (2")	LF	771
0618	2022	CONDUIT (PVC) (SCHD 40) (3")	LF	0
0620	2009	ELEC CONDR (NO. 6) BARE	LF	65
0620	2013	ELEC CONDR (NO. 10) BARE	LF	706
0620	2004	ELEC CONDR (NO. 2) INSULATED	LF	130
0620	2006	ELEC CONDR (NO. 3/0) INSULATED	LF	0
0620	2008	ELEC CONDR (NO. 4) INSULATED	LF	1412
0624	2014	GROUND BOX TY D (162922) W/APRON	EA	3
0628	7010	ELEC SRV TY S (480V) 400A (SS) PS (U)	EA	0
0628	7011	ELEC SRV TY S/E (480V) 400A (SS) PS (U)	EA	0
0858	7002	RAMP TOLL GANTRY (24")	EA	0

ITS SHEET SUMMARY 1 OF 12

ITEM NO.	DESC.	ITEM DESCRIPTION	UNIT	TOTAL
0416	7005	DRILL SHAFT (CCTV MTS) (48 IN)	LF	0
0425	7002	PRESTR CONC CAMERA POLE (40')	EA	0
0624	7001	GROUND BOX TY FO (484860) W/APRON	EA	1
0628	7006	ELEC SRV TY MPE (120/240) 5KVA (SS) PS (U)	EA	1
0628	7007	ELC SRV TY MPE (120/240) 10KVA (SS) PS (U)	EA	0
0628	7008	INS OH SN SUP (40 FT CANT) (DMS)	EA	0
0650	7004	COMMUNICATIONS HUT (101208)	EA	0
0852	7002	MULTIDUCT CONDUIT (PVC) (4-1.25" DUCT)	EA	943
0860	7001	MULTIDUCT CONDUIT (RM) (4-1.25" DUCT)	LF	203
0860	7002	MULTIDUCT CONDUIT (FIBERGLASS) (4-1.25" DUCT)	LF	360

NO.	DATE	REVISION	APPROV.

CORRIDOR NAME

NTTA®
NORTH TEXAS TOLLWAY AUTHORITY

ROADWAY EXAMPLE STANDARDS MANUAL

STA 1107+20 TO STA 1112+00
SHEET 18 OF 29

COMPANY LOGO | SECTION

DRAWN CAS DATE 02/08 DESIGNED RDW DATE 02/08
CHECKED RDW DATE 02/08 SCALE 1" = 100'

CONTRACT NO. XXXXX-XXX-XX-XX-XX SHEET ___ OF ___

$$$$REFLOG$$$$10
$$$$REFLOG$$$$08
$$$$REFLOG$$$$06
$$$$REFLOG$$$$04
$$$$REFLOG$$$$02
$$$$REFLOG$$$$09
$$$$REFLOG$$$$07
$$$$REFLOG$$$$05
$$$$REFLOG$$$$03
$$$$REFLOG$$$$01
rkinyua
100.0000 ' / IN.
7/2/2008 8:13:44 AM
\\dalw00\projects\42436\Maintenance\RESM\B28BRESM17.dgn
8:13:44 AM

ELECTRICAL SHEET SUMMARY 2 OF 12

ITEM NO.	DESC.	ITEM DESCRIPTION	UNIT	TOTAL
0618	2018	CONDUIT (PVC) (SCHD 40) (2")	LF	2460
0618	2022	CONDUIT (PVC) (SCHD 40) (3")	LF	0
0620	2009	ELEC CONDR (NO. 6) BARE	LF	1240
0620	2013	ELEC CONDR (NO. 10) BARE	LF	1220
0620	2004	ELEC CONDR (NO. 2) INSULATED	LF	2480
0620	2006	ELEC CONDR (NO. 3/0) INSULATED	LF	0
0620	2008	ELEC CONDR (NO. 4) INSULATED	LF	2440
0624	2014	GROUND BOX TY D (162922) W/APRON	EA	7
0628	7010	ELEC SRV TY S (480V) 400A (SS) PS (U)	EA	0
0628	7011	ELEC SRV TY S/E (480V) 400A (SS) PS (U)	EA	0
0858	7002	RAMP TOLL GANTRY (24")	EA	0

ITS SHEET SUMMARY 2 OF 12

ITEM NO.	DESC.	ITEM DESCRIPTION	UNIT	TOTAL
0416	7005	DRILL SHAFT (CCTV MTS)(48 IN)	LF	0
0425	7002	PRESTR CONC CAMERA POLE (40')	EA	0
0624	7001	GROUND BOX TY FO (484860) W/APRON	EA	4
0628	7006	ELEC SRV TY MPE (120/240) 5KVA (SS) PS (U)	EA	0
0628	7007	ELC SRV TY MPE (120/240) 10KVA (SS) PS (U)	EA	0
0628	7008	INS OH SN SUP (40 FT CANT)(DMS)	EA	0
0650	7004	COMMUNICATIONS HUT (101208)	EA	0
0852	7002	MULTIDUCT CONDUIT (PVC)(4-1.25" DUCT)	EA	1580
0860	7001	MULTIDUCT CONDUIT (RM)(4-1.25" DUCT)	LF	0
0860	7002	MULTIDUCT CONDUIT (FIBERGLASS)(4-1.25" DUCT)	LF	0

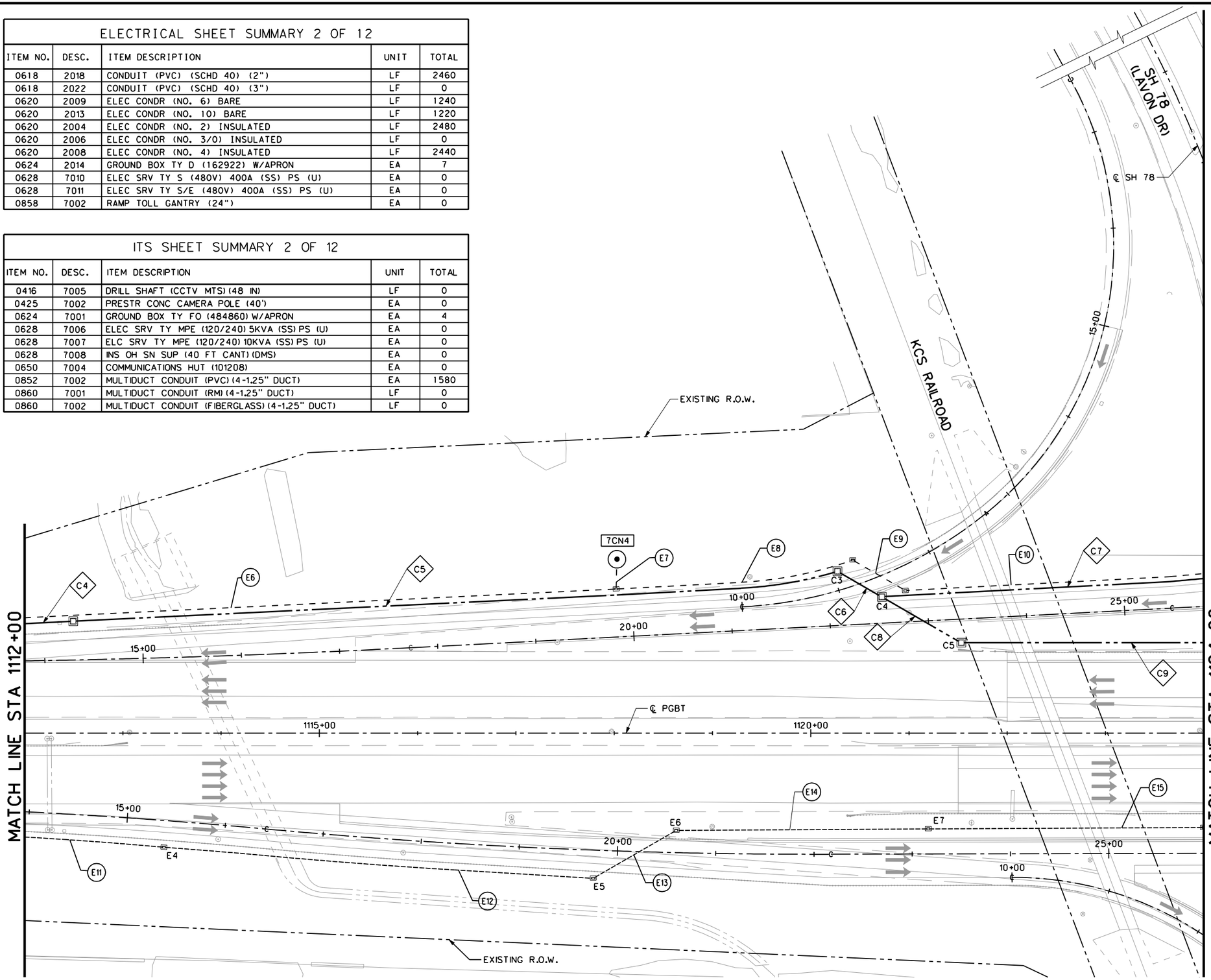

0 50 100 150 200
HORIZ. SCALE IN FEET

N

NOTES:

1) REFER TO FOUNDATION LAYOUT SHEETS FOR MORE INFORMATION.

NO.	DATE	REVISION	APPROV.

CORRIDOR NAME

NTTA®
NORTH TEXAS TOLLWAY AUTHORITY

ROADWAY EXAMPLE STANDARDS MANUAL

STA 1112+00 TO STA 1124+00
SHEET 19 OF 29

COMPANY LOGO | SECTION

DRAWN CAS DATE 02/08 DESIGNED RDW DATE 02/08
CHECKED RDW DATE 02/08 SCALE 1"= 100'

CONTRACT NO. XXXXX-XXX-XX-XX-XX SHEET ___ OF ___

8:14:09 AM

$$$REFLOG$$$10 $$$REFLOG$$$08 $$$REFLOG$$$06 $$$REFLOG$$$04 $$$REFLOG$$$02
$$$REFLOG$$$09 $$$REFLOG$$$07 $$$REFLOG$$$05 $$$REFLOG$$$03 $$$REFLOG$$$01
rkinyua 100.0000 ft / IN. 8:14:09 AM 7/2/2008 \\dalw00\projects\42436\Maintenance\RESM\B28BRESM18.dgn

ITS SHEET SUMMARY 3 OF 12

ITEM NO.	DESC.	ITEM DESCRIPTION	UNIT	TOTAL
0416	7005	DRILL SHAFT (CCTV MTS)(48 IN)	LF	15
0425	7002	PRESTR CONC CAMERA POLE (40')	EA	1
0624	7001	GROUND BOX TY FO (484860) W/APRON	EA	4
0628	7006	ELEC SRV TY MPE (120/240) 5KVA (SS) PS (U)	EA	1
0628	7007	ELC SRV TY MPE (120/240) 10KVA (SS) PS (U)	EA	0
0628	7008	INS OH SN SUP (40 FT CANT) (DMS)	EA	0
0650	7004	COMMUNICATIONS HUT (101208)	EA	0
0852	7002	MULTIDUCT CONDUIT (PVC) (4-1.25" DUCT)	EA	1992
0860	7001	MULTIDUCT CONDUIT (RM) (4-1.25" DUCT)	LF	92
0860	7002	MULTIDUCT CONDUIT (FIBERGLASS) (4-1.25" DUCT)	LF	0

ELECTRICAL SHEET SUMMARY 3 OF 12

ITEM NO.	DESC.	ITEM DESCRIPTION	UNIT	TOTAL
0618	2018	CONDUIT (PVC) (SCHD 40) (2")	LF	2069
0618	2022	CONDUIT (PVC) (SCHD 40) (3")	LF	0
0620	2009	ELEC CONDR (NO. 6) BARE	LF	1870
0620	2013	ELEC CONDR (NO. 10) BARE	LF	199
0620	2004	ELEC CONDR (NO. 2) INSULATED	LF	3740
0620	2006	ELEC CONDR (NO. 3/0) INSULATED	LF	0
0620	2008	ELEC CONDR (NO. 4) INSULATED	LF	398
0624	2014	GROUND BOX TY D (162922) W/APRON	EA	7
0628	7010	ELEC SRV TY S (480V) 400A (SS) PS (U)	EA	0
0628	7011	ELEC SRV TY S/E (480V) 400A (SS) PS (U)	EA	0
0858	7002	RAMP TOLL GANTRY (24")	EA	1

0 50 100 150 200
HORIZ. SCALE IN FEET

N

NOTES:

1) REFER TO LAYOUT FOUNDATION SHEETS FOR MORE INFORMATION.
2) REFER TO CCTV CAMERA #2 PRECAST CONC. POLE DETAILS SHEET FOR MORE INFORMATION.
3) ALLOW 12" CONDUIT SEPARATION WHEN USING COMMON TRENCH.
4) REFER TO GANTRY POWER PLAN SHEETS FOR MORE INFORMATION ON THE ELECTRICAL SERVICE CENTER.
5) REFER TO NTTA STANDARD ESC-003(1)-2007 FOR MORE INFORMATION ON ESC TYPE MPE.
6) 2" COMMUNICATION CONDUIT SUBSIDIARY TO ESC TYPE MPE.

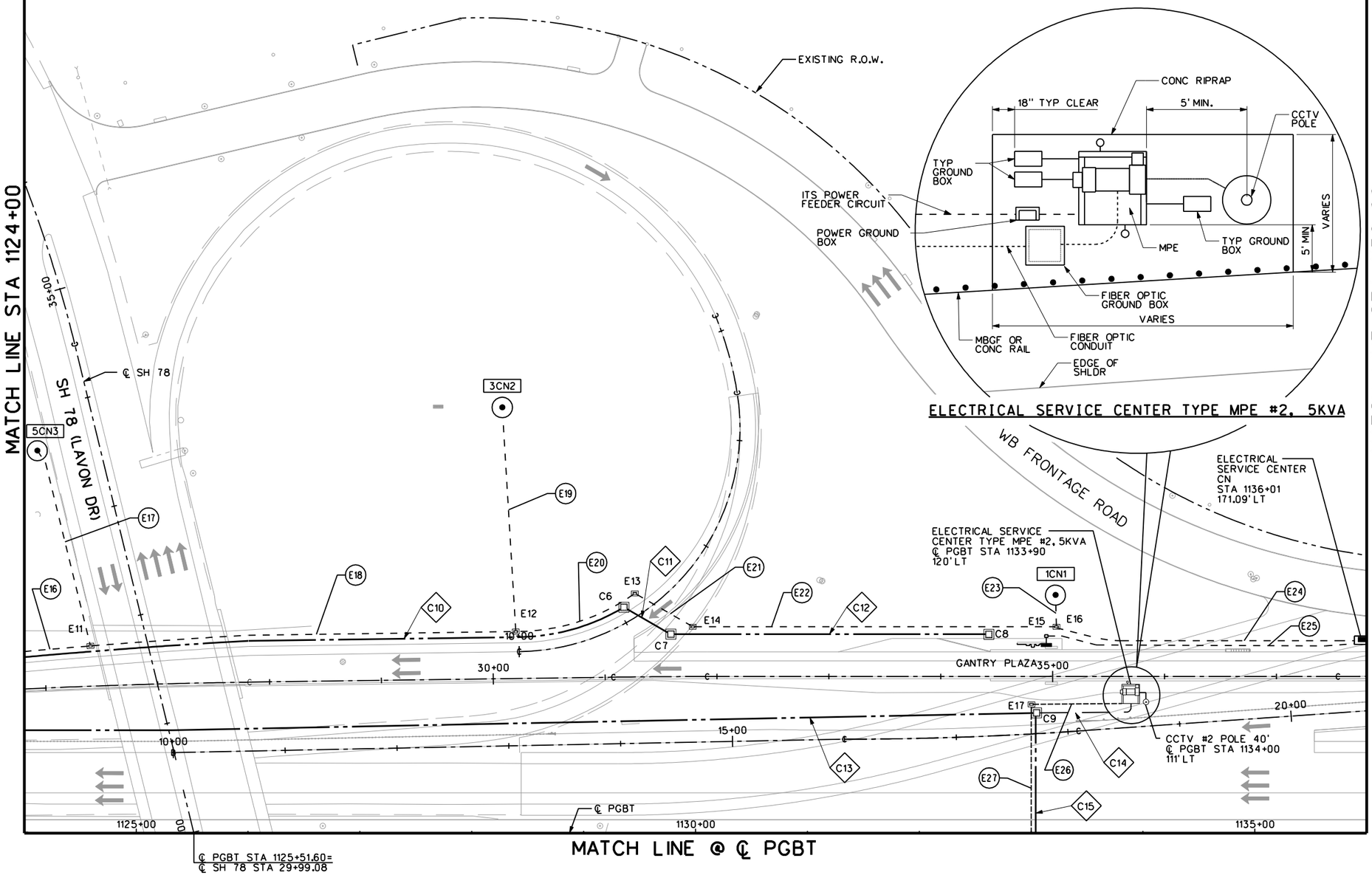

NO.	DATE	REVISION	APPROV.

CORRIDOR NAME

NTTA®
NORTH TEXAS TOLLWAY AUTHORITY

ROADWAY EXAMPLE STANDARDS MANUAL

NORTH STA 1124+00 TO STA 1136+00
SHEET 20 OF 29

COMPANY LOGO | SECTION

DRAWN CAS DATE 02/08 | DESIGNED RDW DATE 02/08
CHECKED RDW DATE 02/08 | SCALE 1"= 100'

CONTRACT NO. XXXXX-XXX-XX-XX-XX SHEET ___ OF ___

8:14:33 AM

$$$REFLOG$$$10 ..... $$$REFLOG$$$08 ..... $$$REFLOG$$$06 ..... $$$REFLOG$$$04 ..... $$$REFLOG$$$02 .....
$$$REFLOG$$$09 ..... $$$REFLOG$$$07 ..... $$$REFLOG$$$05 ..... $$$REFLOG$$$03 ..... $$$REFLOG$$$01 .....
rkinyua 8:14:33 AM
100.0000 ft / IN.
7/2/2008
\\dalw00\projects\42436\Maintenance\RESM\B28BRESM19.dgn

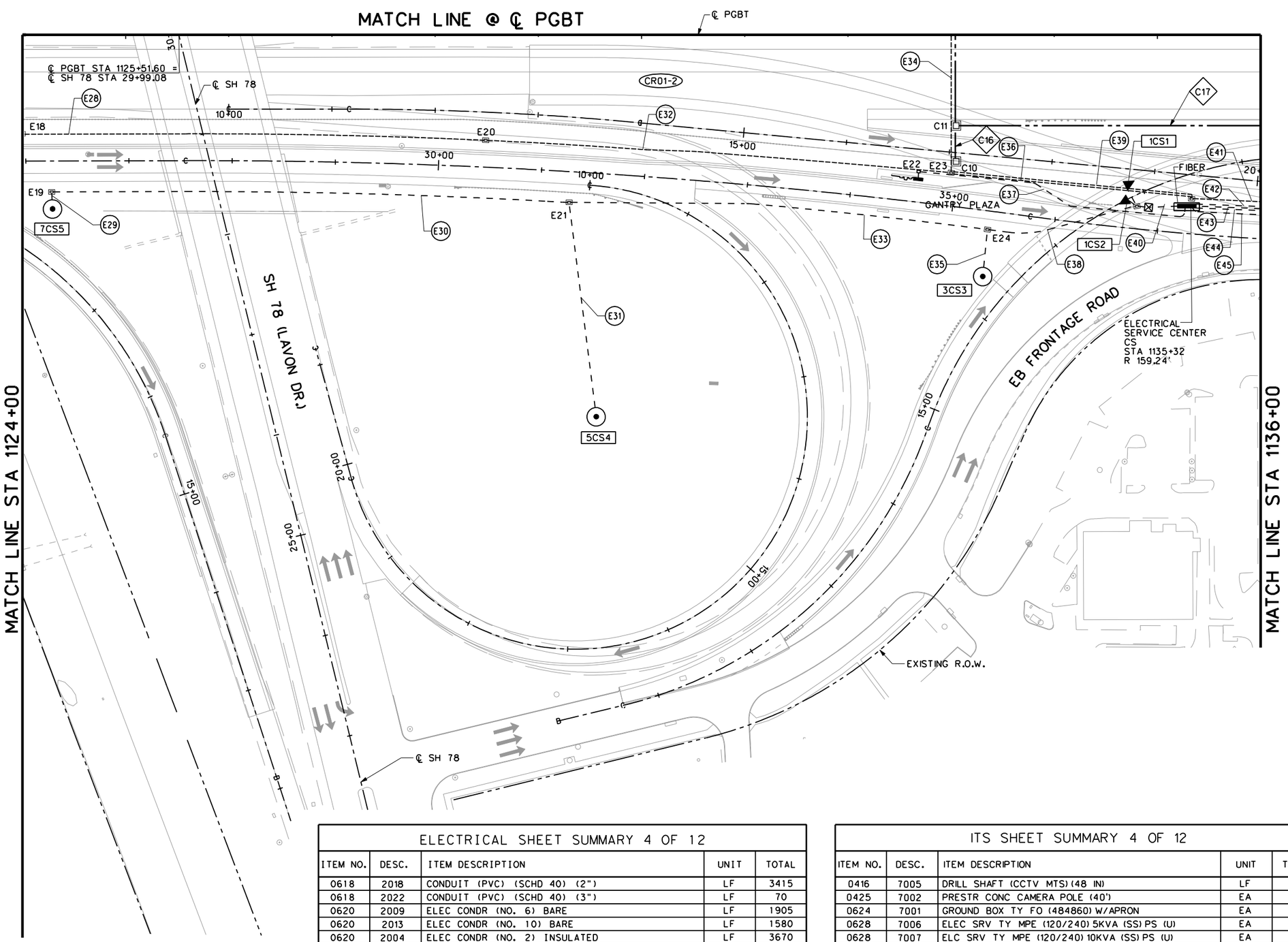

0 50 100 150 200
HORIZ. SCALE IN FEET

NOTES:

1) REFER TO LAYOUT FOUNDATION SHEETS FOR MORE INFORMATION.

2) REFER TO CCTV CAMERA #2 PRECAST CONC. POLE DETAILS SHEET FOR MORE INFORMATION.

3) ALLOW 12" CONDUIT SEPARATION WHEN USING COMMON TRENCH.

4) REFER TO GANTRY POWER PLAN SHEETS FOR MORE INFORMATION ON THE ELECTRICAL SERVICE CENTER.

5) REFER TO NTTA STANDARD ESC-003(1)-2007 FOR MORE INFORMATION ON ESC TYPE MPE.

6) 2" COMMUNICATION CONDUIT SUBSIDIARY TO ESC TYPE MPE.

ELECTRICAL SHEET SUMMARY 4 OF 12

ITEM NO.	DESC.	ITEM DESCRIPTION	UNIT	TOTAL
0618	2018	CONDUIT (PVC) (SCHD 40) (2")	LF	3415
0618	2022	CONDUIT (PVC) (SCHD 40) (3")	LF	70
0620	2009	ELEC CONDR (NO. 6) BARE	LF	1905
0620	2013	ELEC CONDR (NO. 10) BARE	LF	1580
0620	2004	ELEC CONDR (NO. 2) INSULATED	LF	3670
0620	2006	ELEC CONDR (NO. 3/0) INSULATED	LF	140
0620	2008	ELEC CONDR (NO. 4) INSULATED	LF	3160
0624	2014	GROUND BOX TY D (162922) W/APRON	EA	7
0628	7010	ELEC SRV TY S (480V) 400A (SS) PS (U)	EA	1
0628	7011	ELEC SRV TY S/E (480V) 400A (SS) PS (U)	EA	0
0858	7002	RAMP TOLL GANTRY (24")	EA	1

ITS SHEET SUMMARY 4 OF 12

ITEM NO.	DESC.	ITEM DESCRIPTION	UNIT	TOTAL
0416	7005	DRILL SHAFT (CCTV MTS) (48 IN)	LF	0
0425	7002	PRESTR CONC CAMERA POLE (40')	EA	0
0624	7001	GROUND BOX TY FO (484860) W/APRON	EA	2
0628	7006	ELEC SRV TY MPE (120/240) 5KVA (SS) PS (U)	EA	0
0628	7007	ELC SRV TY MPE (120/240) 10KVA (SS) PS (U)	EA	0
0628	7008	INS OH SN SUP (40 FT CANT) (DMS)	EA	0
0650	7004	COMMUNICATIONS HUT (101208)	EA	0
0852	7002	MULTIDUCT CONDUIT (PVC) (4-1.25" DUCT)	EA	300
0860	7001	MULTIDUCT CONDUIT (RM) (4-1.25" DUCT)	LF	40
0860	7002	MULTIDUCT CONDUIT (FIBERGLASS) (4-1.25" DUCT)	LF	0

NO.	DATE	REVISION	APPROV.

CORRIDOR NAME

NTTA®
NORTH TEXAS TOLLWAY AUTHORITY

ROADWAY EXAMPLE STANDARDS MANUAL

SOUTH STA 1124+00 TO STA 1136+00
SHEET 21 OF 29

COMPANY LOGO | SECTION

DRAWN CAS DATE 02/08 DESIGNED RDW DATE 02/08
CHECKED RDW DATE 02/08 SCALE 1" = 100'

CONTRACT NO. XXXXX-XXX-XX-XX-XX SHEET ___ OF ___

8:15:01 AM

$$$REFLOG$$$10 ..... $$$REFLOG$$$09 .....
$$$REFLOG$$$08 ..... $$$REFLOG$$$07 .....
$$$REFLOG$$$06 ..... $$$REFLOG$$$05 .....
$$$REFLOG$$$04 ..... $$$REFLOG$$$03 .....
$$$REFLOG$$$02 ..... $$$REFLOG$$$01 .....
rkinyua
100.0000 ft / IN.
8:15:01 AM
7/2/2008
\\dalw00\projects\42436\Maintenance\RESM\B28BRESM20.dgn

ELECTRICAL SHEET SUMMARY 5 OF 12

ITEM NO.	DESC.	ITEM DESCRIPTION	UNIT	TOTAL
0618	2018	CONDUIT (PVC) (SCHD 40) (2")	LF	4475
0618	2022	CONDUIT (PVC) (SCHD 40) (3")	LF	425
0620	2009	ELEC CONDR (NO. 6) BARE	LF	4590
0620	2013	ELEC CONDR (NO. 10) BARE	LF	310
0620	2004	ELEC CONDR (NO. 2) INSULATED	LF	8330
0620	2006	ELEC CONDR (NO. 3/0) INSULATED	LF	850
0620	2008	ELEC CONDR (NO. 4) INSULATED	LF	620
0624	2014	GROUND BOX TY D (162922) W/APRON	EA	18
0628	7010	ELEC SRV TY S (480V) 400A (SS) PS (U)	EA	1
0628	7011	ELEC SRV TY S/E (480V) 400A (SS) PS (U)	EA	2
0858	7002	RAMP TOLL GANTRY (24")	EA	2

ITS SHEET SUMMARY 5 OF 12

ITEM NO.	DESC.	ITEM DESCRIPTION	UNIT	TOTAL
0416	7005	DRILL SHAFT (CCTV MTS)(48 IN)	LF	0
0425	7002	PRESTR CONC CAMERA POLE (40')	EA	0
0624	7001	GROUND BOX TY FO (484860) W/APRON	EA	5
0628	7006	ELEC SRV TY MPE (120/240) 5KVA (SS) PS (U)	EA	0
0628	7007	ELC SRV TY MPE (120/240) 10KVA (SS) PS (U)	EA	0
0628	7008	INS OH SN SUP (40 FT CANT) (DMS)	EA	0
0650	7004	COMMUNICATIONS HUT (101208)	EA	1
0852	7002	MULTIDUCT CONDUIT (PVC) (4-1.25" DUCT)	EA	1555
0860	7001	MULTIDUCT CONDUIT (RM) (4-1.25" DUCT)	LF	0
0860	7002	MULTIDUCT CONDUIT (FIBERGLASS) (4-1.25" DUCT)	LF	0

0 50 100 150 200
HORIZ. SCALE IN FEET

N

NOTES:

1) REFER TO LAYOUT FOUNDATION SHEETS FOR MORE INFORMATION.

2) REFER TO NTTA STANDARD ITS-003(1,2,3)-2007 FOR INFORMATION ON COMMUNICATIONS HUT.

3) REFER TO GANTRY POWER PLANS FOR POWER SOURCE TO COMMUNICATIONS HUT AND MORE INFORMATION ON ELECTRICAL SERVICE CENTER CN.

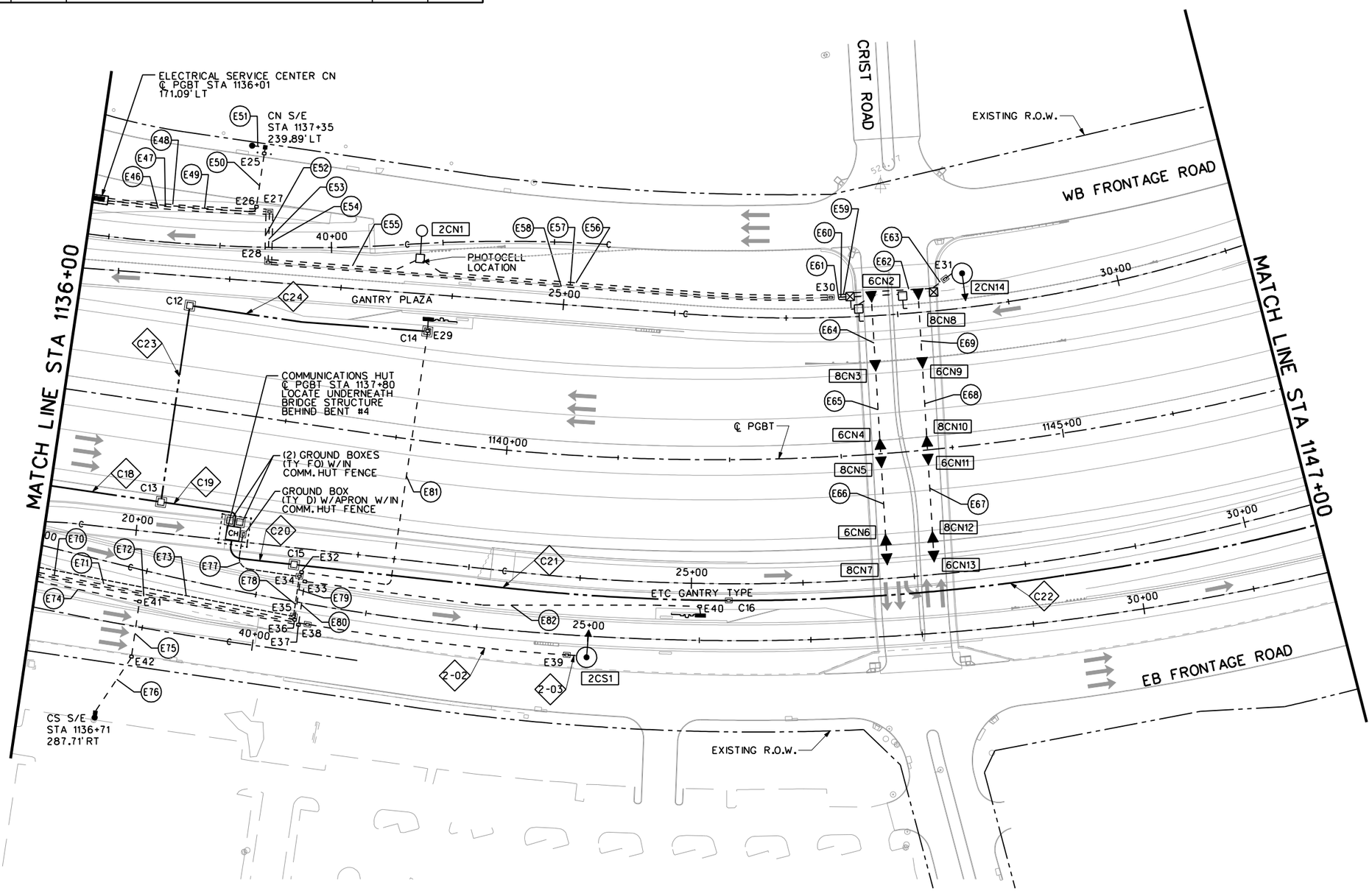

NO.	DATE	REVISION	APPROV.

CORRIDOR NAME

NTTA®
NORTH TEXAS TOLLWAY AUTHORITY

ROADWAY EXAMPLE STANDARDS MANUAL

STA 1136+00 TO STA 1147+00
SHEET 22 OF 29

COMPANY LOGO | SECTION

DRAWN CAS DATE 02/08 | DESIGNED RDW DATE 02/08
CHECKED RDW DATE 02/08 | SCALE 1"= 100'

CONTRACT NO. XXXXX-XXX-XX-XX-XX SHEET ___ OF ___

8:15:28 AM

$$$REFLOG$$$10
$$$REFLOG$$$08
$$$REFLOG$$$06
$$$REFLOG$$$04
$$$REFLOG$$$02
$$$REFLOG$$$09
$$$REFLOG$$$07
$$$REFLOG$$$05
$$$REFLOG$$$03
$$$REFLOG$$$01
rkiyua
100.0000 ft / IN.
7/2/2008 8:15:28 AM
\\dalw00\projects\42436\Maintenance\RESM\B28BRESM21.dgn

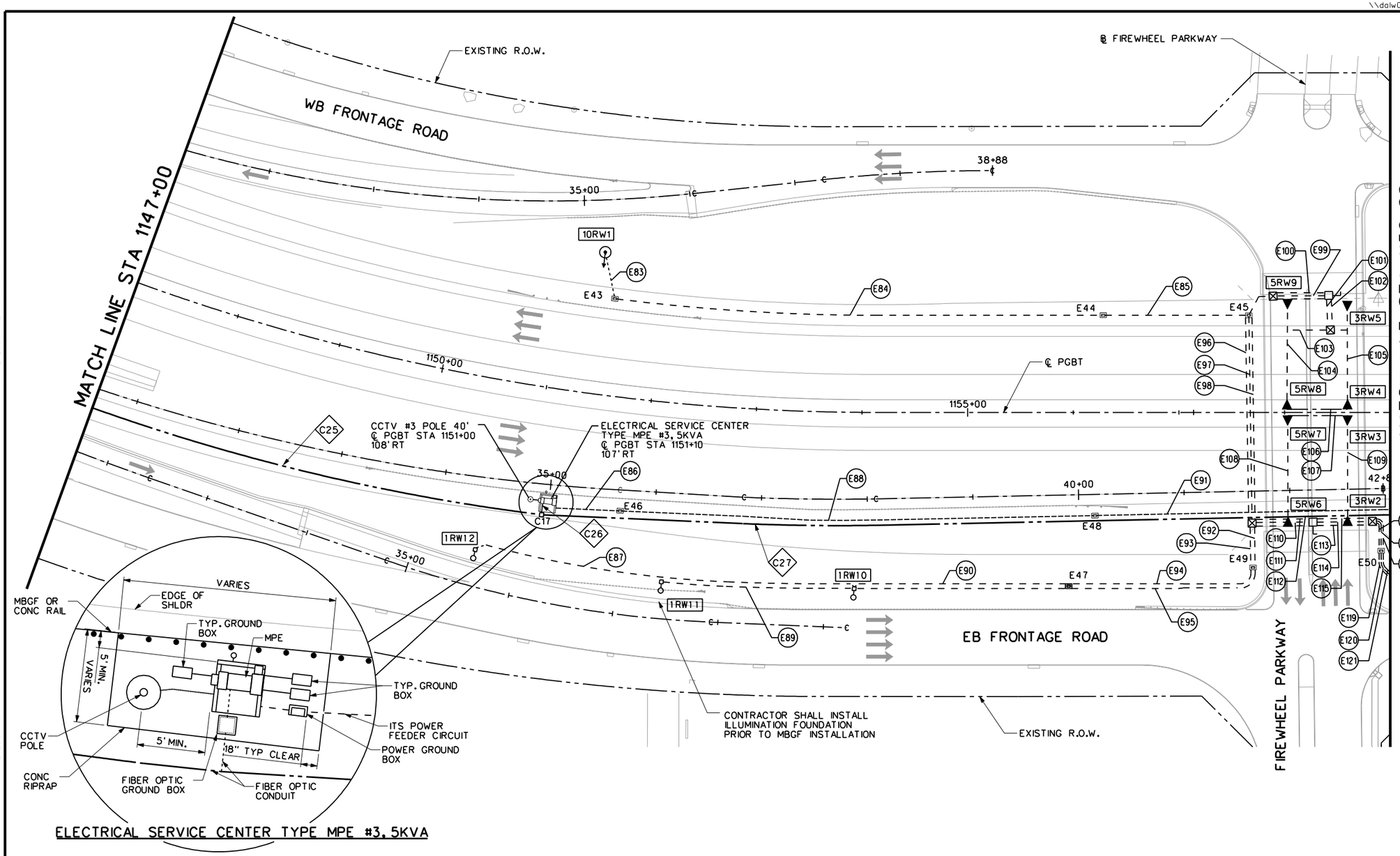

ELECTRICAL SERVICE CENTER TYPE MPE #3, 5KVA

0 50 100 150 200
HORIZ. SCALE IN FEET

N

NOTES:

1) REFER TO LAYOUT FOUNDATION SHEETS FOR MORE INFORMATION.

2) REFER TO CCTV CAMERA #3 PRECAST CONC. POLE DETAIL SHEET FOR MORE INFORMATION.

3) ALLOW 12" CONDUIT SEPARATION WHEN USING COMMON TRENCH.

4) REFER TO NTTA STANDARD ESC-003(1)-2007 FOR MORE INFORMATION ON ESC TYPE MPE.

5) 2" COMMUNICATION CONDUIT SUBSIDIARY TO ESC TYPE MPE.

ELECTRICAL SHEET SUMMARY 6 OF 12

ITEM NO.	DESC.	ITEM DESCRIPTION	UNIT	TOTAL
0618	2018	CONDUIT (PVC) (SCHD 40) (2")	LF	4535
0618	2022	CONDUIT (PVC) (SCHD 40) (3")	LF	0
0620	2009	ELEC CONDR (NO. 6) BARE	LF	3740
0620	2013	ELEC CONDR (NO. 10) BARE	LF	795
0620	2004	ELEC CONDR (NO. 2) INSULATED	LF	7480
0620	2006	ELEC CONDR (NO. 3/0) INSULATED	LF	0
0620	2008	ELEC CONDR (NO. 4) INSULATED	LF	1590
0624	2014	GROUND BOX TY D (162922) W/APRON	EA	8
0628	7010	ELEC SRV TY S (480V) 400A (SS) PS (U)	EA	0
0628	7011	ELEC SRV TY S/E (480V) 400A (SS) PS (U)	EA	0
0858	7002	RAMP TOLL GANTRY (24")	EA	0

ITS SHEET SUMMARY 6 OF 12

ITEM NO.	DESC.	ITEM DESCRIPTION	UNIT	TOTAL
0416	7005	DRILL SHAFT (CCTV MTS) (48 IN)	LF	15
0425	7002	PRESTR CONC CAMERA POLE (40')	EA	1
0624	7001	GROUND BOX TY FO (484860) W/APRON	EA	1
0628	7006	ELEC SRV TY MPE (120/240) 5KVA (SS) PS (U)	EA	1
0628	7007	ELC SRV TY MPE (120/240) 10KVA (SS) PS (U)	EA	0
0628	7008	INS OH SN SUP (40 FT CANT) (DMS)	EA	0
0650	7004	COMMUNICATIONS HUT (101208)	EA	0
0852	7002	MULTIDUCT CONDUIT (PVC) (4-1.25" DUCT)	EA	1250
0860	7001	MULTIDUCT CONDUIT (RM) (4-1.25" DUCT)	LF	11
0860	7002	MULTIDUCT CONDUIT (FIBERGLASS) (4-1.25" DUCT)	LF	0

NO.	DATE	REVISION	APPROV.

CORRIDOR NAME

NTTA®
NORTH TEXAS TOLLWAY AUTHORITY

ROADWAY EXAMPLE STANDARDS MANUAL

STA 1147+00 TO STA 1159+00
SHEET 23 OF 29

COMPANY LOGO | SECTION

DRAWN CAS DATE 02/08 DESIGNED RDW DATE 02/08
CHECKED RDW DATE 02/08 SCALE 1"= 100'

CONTRACT NO. XXXXX-XXX-XX-XX-XX SHEET ___ OF ___

8:15:54 AM

$$$REFLOC$$$10
$$$REFLOC$$$08
$$$REFLOC$$$06
$$$REFLOC$$$04
$$$REFLOC$$$02
$$$REFLOC$$$09
$$$REFLOC$$$07
$$$REFLOC$$$05
$$$REFLOC$$$03
$$$REFLOC$$$01
rkinyua
100.0000 ' / IN.
7/2/2008 8:15:54 AM
\\dalw00\projects\42436\Maintenance\RESM\B28BRESM22.dgn

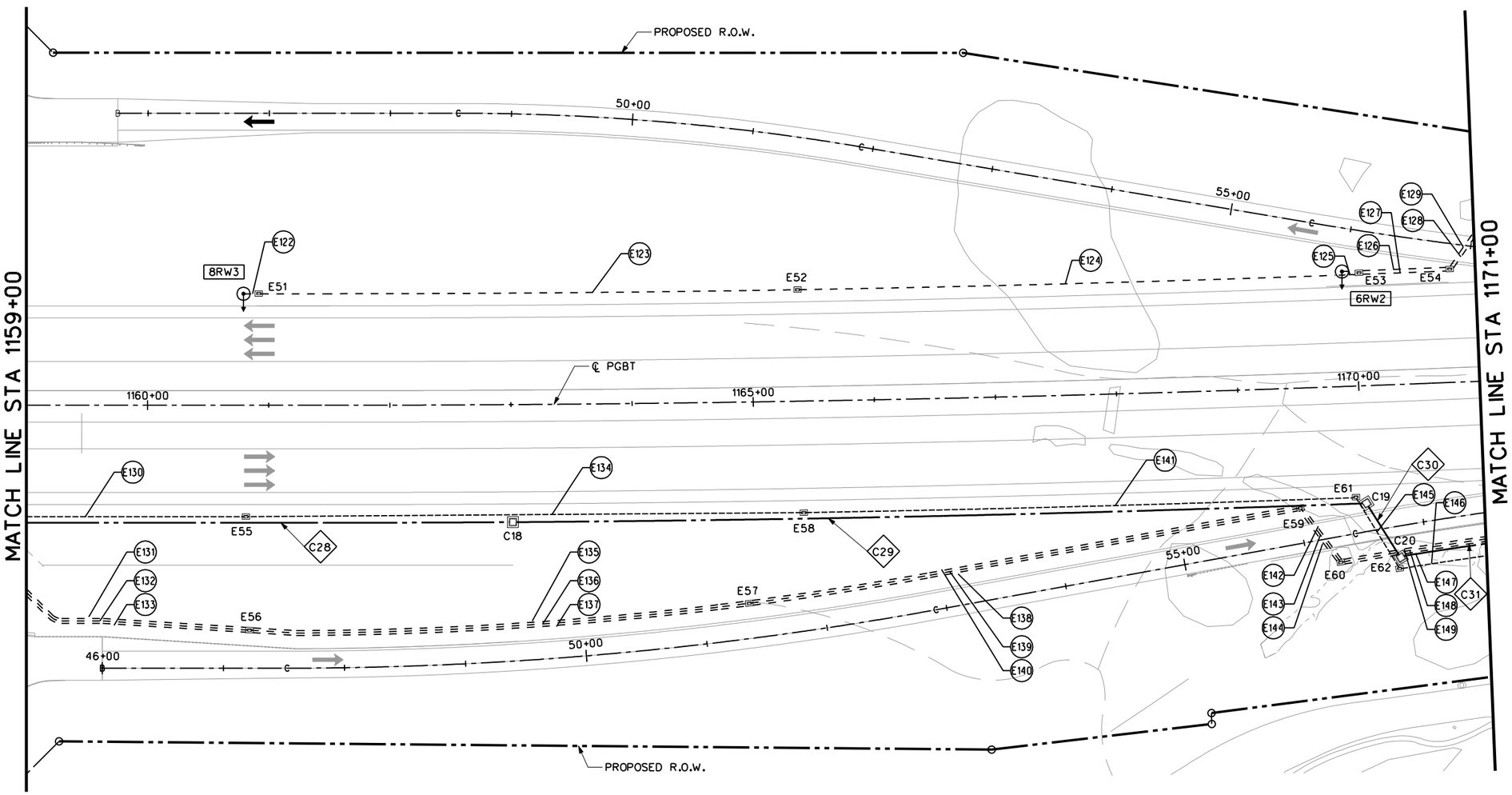

0 50 100 150 200
HORIZ. SCALE IN FEET

N

NOTES:

1) REFER TO LAYOUT FOUNDATION SHEETS FOR MORE INFORMATION.

2) ALLOW 12" CONDUIT SEPARATION WHEN USING COMMON TRENCH.

ITS SHEET SUMMARY 7 OF 12

ITEM NO.	DESC.	ITEM DESCRIPTION	UNIT	TOTAL
0416	7005	DRILL SHAFT (CCTV MTS)(48 IN)	LF	0
0425	7002	PRESTR CONC CAMERA POLE (40')	EA	0
0624	7001	GROUND BOX TY FO (484860) W/APRON	EA	3
0628	7006	ELEC SRV TY MPE (120/240) 5KVA (SS) PS (U)	EA	0
0628	7007	ELC SRV TY MPE (120/240) 10KVA (SS) PS (U)	EA	0
0628	7008	INS OH SN SUP (40 FT CANT) (DMS)	EA	0
0650	7004	COMMUNICATIONS HUT (101208)	EA	0
0852	7002	MULTIDUCT CONDUIT (PVC) (4-1.25" DUCT)	EA	1225
0860	7001	MULTIDUCT CONDUIT (RM) (4-1.25" DUCT)	LF	0
0860	7002	MULTIDUCT CONDUIT (FIBERGLASS) (4-1.25" DUCT)	LF	0

ELECTRICAL SHEET SUMMARY 7 OF 12

ITEM NO.	DESC.	ITEM DESCRIPTION	UNIT	TOTAL
0618	2018	CONDUIT (PVC) (SCHD 40) (2")	LF	5785
0618	2022	CONDUIT (PVC) (SCHD 40) (3")	LF	0
0620	2009	ELEC CONDR (NO. 6) BARE	LF	4560
0620	2013	ELEC CONDR (NO. 10) BARE	LF	1225
0620	2004	ELEC CONDR (NO. 2) INSULATED	LF	9120
0620	2006	ELEC CONDR (NO. 3/0) INSULATED	LF	0
0620	2008	ELEC CONDR (NO. 4) INSULATED	LF	2450
0624	2014	GROUND BOX TY D (162922) W/APRON	EA	12
0628	7010	ELEC SRV TY S (480V) 400A (SS) PS (U)	EA	0
0628	7011	ELEC SRV TY S/E (480V) 400A (SS) PS (U)	EA	0
0858	7002	RAMP TOLL GANTRY (24")	EA	0

NO.	DATE	REVISION	APPROV.

CORRIDOR NAME

NTTA®
NORTH TEXAS TOLLWAY AUTHORITY

ROADWAY EXAMPLE STANDARDS MANUAL

STA 1159+00 TO STA 1171+00
SHEET 24 OF 29

COMPANY LOGO

SECTION

DRAWN CAS DATE 02/08 DESIGNED RDW DATE 02/08
CHECKED RDW DATE 02/08 SCALE 1"= 100'

CONTRACT NO. XXXXX-XXX-XX-XX-XX SHEET ___ OF ___

8:16:28 AM

$$$REFLOC$$$10
$$$REFLOC$$$08
$$$REFLOC$$$06
$$$REFLOC$$$04
$$$REFLOC$$$02
$$$REFLOC$$$09
$$$REFLOC$$$07
$$$REFLOC$$$05
$$$REFLOC$$$03
$$$REFLOC$$$01
rkinyua
100.0000 ft / IN.
7/2/2008 8:16:28 AM
\\dalw00\projects\42436\Maintenance\RESM\B28BRESM23.dgn

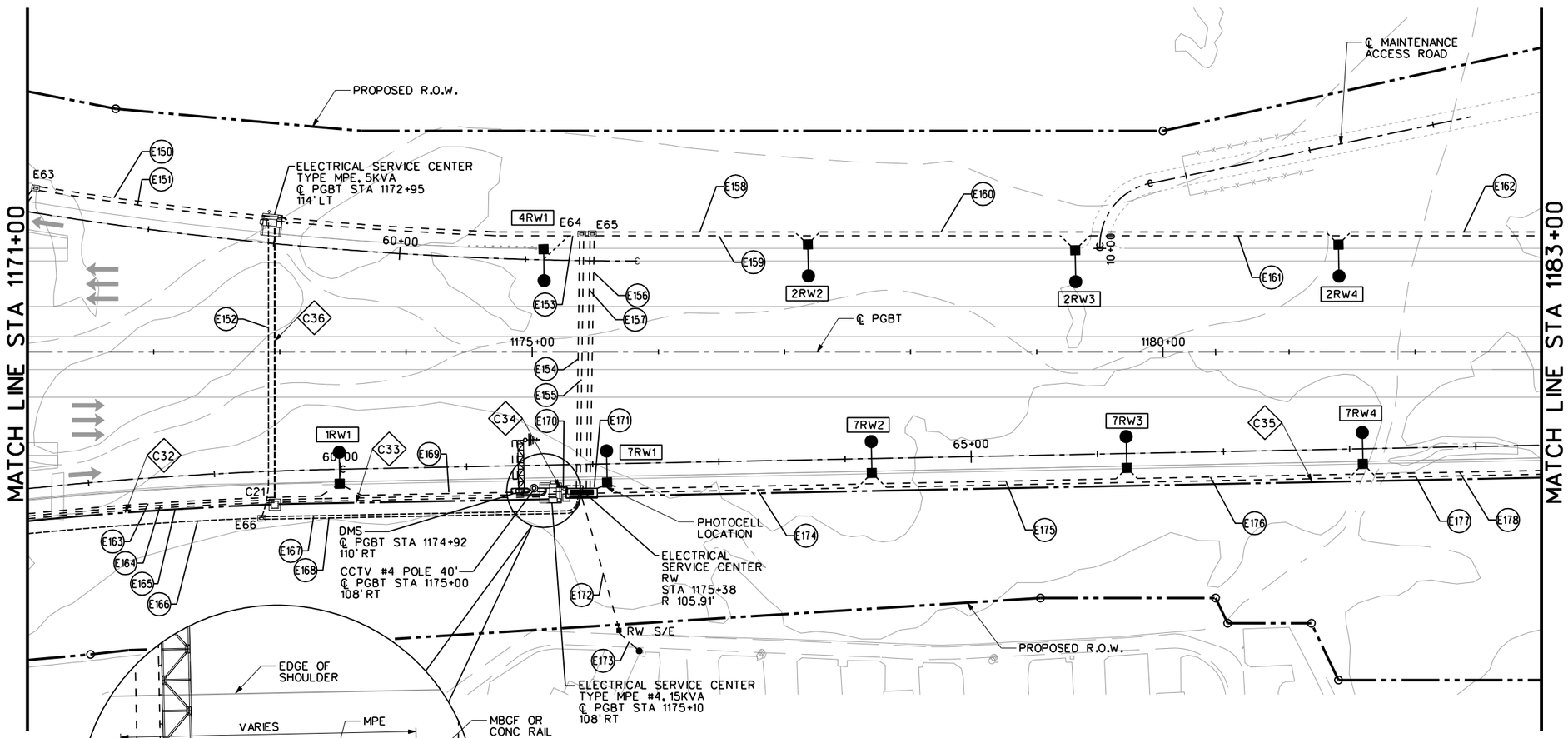

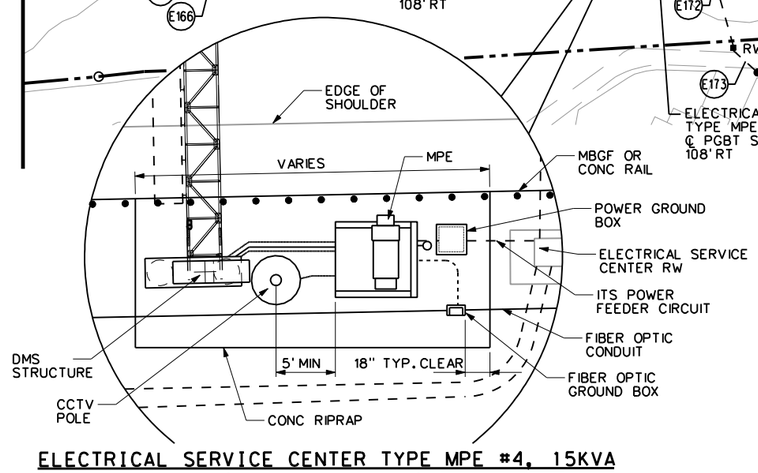

ELECTRICAL SERVICE CENTER TYPE MPE #4, 15KVA

0 50 100 150 200
HORIZ. SCALE IN FEET

N

NOTES:

1) REFER TO FOUNDATION LAYOUT SHEETS FOR MORE INFORMATION.
2) REFER TO GANTRY POWER PLAN SHEETS FOR MORE INFORMATION ON THE ELECTRICAL SERVICE CENTER RW.
3) REFER TO NTTA STANDARD ESC-003(1)-2007 FOR MORE INFORMATION ON ESC TYPE MPE.
4) ALLOW 12" CONDUIT SEPARATION WHEN USING COMMON TRENCH.
5) REFER TO CCTV CAMERA #4 PRECAST CONC. POLE DETAILS SHEET FOR MORE INFORMATION.
6) REFER TO NTTA STANDARD ITS-007(1-70-2008 SERIES FOR MORE INFORMATION.
7) 2" COMMUNICATION CONDUIT SUBSIDIARY TO ESC TYPE MPE.

ELECTRICAL SHEET SUMMARY 8 OF 12

ITEM NO.	DESC.	ITEM DESCRIPTION	UNIT	TOTAL
0618	2018	CONDUIT (PVC) (SCHD 40) (2")	LF	7095
0618	2022	CONDUIT (PVC) (SCHD 40) (3")	LF	140
0620	2009	ELEC CONDR (NO. 6) BARE	LF	6540
0620	2013	ELEC CONDR (NO. 10) BARE	LF	695
0620	2004	ELEC CONDR (NO. 2) INSULATED	LF	12800
0620	2006	ELEC CONDR (NO. 3/0) INSULATED	LF	280
0620	2008	ELEC CONDR (NO. 4) INSULATED	LF	1390
0624	2014	GROUND BOX TY D (162922) W/APRON	EA	4
0628	7010	ELEC SRV TY S (480V) 400A (SS) PS (U)	EA	1
0628	7011	ELEC SRV TY S/E (480V) 400A (SS) PS (U)	EA	1
0858	7002	RAMP TOLL GANTRY (24")	EA	0

ITS SHEET SUMMARY 8 OF 12

ITEM NO.	DESC.	ITEM DESCRIPTION	UNIT	TOTAL
0416	7005	DRILL SHAFT (CCTV MTS) (48 IN)	LF	15
0425	7002	PRESTR CONC CAMERA POLE (40')	EA	1
0624	7001	GROUND BOX TY FO (484860) W/APRON	EA	1
0628	7006	ELEC SRV TY MPE (120/240) 5KVA (SS) PS (U)	EA	1
0628	7007	ELC SRV TY MPE (120/240) 10KVA (SS) PS (U)	EA	1
0628	7008	INS OH SN SUP (40 FT CANT) (DMS)	EA	1
0650	7004	COMMUNICATIONS HUT (101208)	EA	0
0852	7002	MULTIDUCT CONDUIT (PVC) (4-1.25" DUCT)	EA	1200
0860	7001	MULTIDUCT CONDUIT (RM) (4-1.25" DUCT)	LF	239
0860	7002	MULTIDUCT CONDUIT (FIBERGLASS) (4-1.25" DUCT)	LF	0

NO.	DATE	REVISION	APPROV.

CORRIDOR NAME

NTTA®
NORTH TEXAS TOLLWAY AUTHORITY

ROADWAY EXAMPLE STANDARDS MANUAL

STA 1171+00 TO STA 1183+00
SHEET 25 OF 29

COMPANY LOGO | SECTION

DRAWN CAS DATE 02/08 DESIGNED RDW DATE 02/08
CHECKED RDW DATE 02/08 SCALE 1"= 100'

CONTRACT NO. XXXXX-XXX-XX-XX-XX SHEET ___ OF ___

$$$REFLOG$$$10
$$$REFLOG$$$08
$$$REFLOG$$$06
$$$REFLOG$$$04
$$$REFLOG$$$02
$$$REFLOG$$$09
$$$REFLOG$$$07
$$$REFLOG$$$05
$$$REFLOG$$$03
$$$REFLOG$$$01

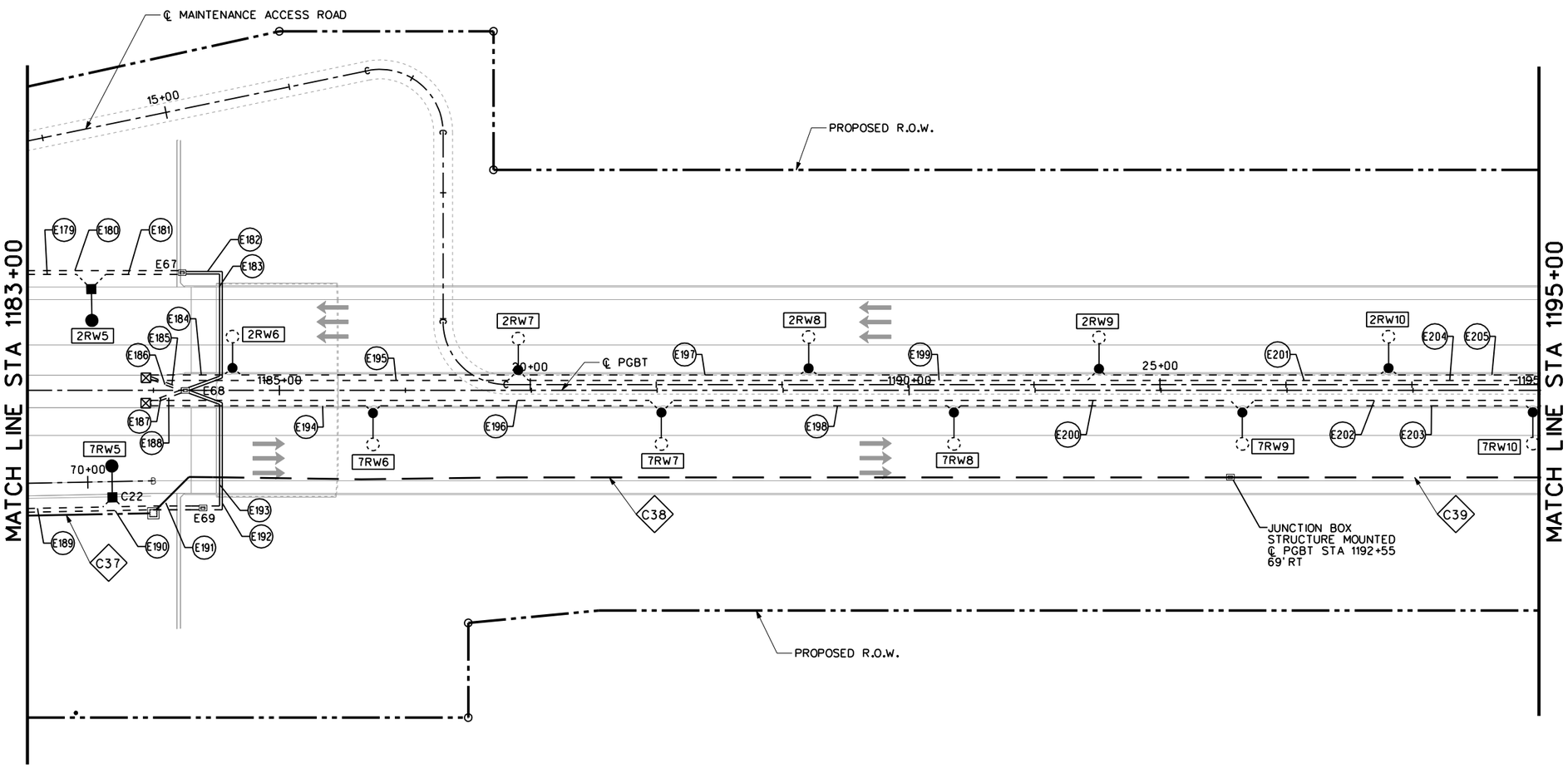

0 50 100 150 200
HORIZ. SCALE IN FEET

N

NOTES:

1) REFER TO LAYOUT FOUNDATION SHEETS FOR MORE INFORMATION.

2) REFER TO JUNCTION BOX STRUCTURE MOUNTED DETAIL SHEET FOR MORE INFORMATION.

3) REFER TO NTTA STANDARD ITS-001(1)-2004 FOR TYPICAL FIBER OPTIC CONDUIT AT OVERPASS BRIDGES.

ELECTRICAL SHEET SUMMARY 9 OF 12

ITEM NO.	DESC.	ITEM DESCRIPTION	UNIT	TOTAL
0618	2018	CONDUIT (PVC) (SCHD 40) (2")	LF	5661
0618	2022	CONDUIT (PVC) (SCHD 40) (3")	LF	0
0620	2009	ELEC CONDR (NO. 6) BARE	LF	5661
0620	2013	ELEC CONDR (NO. 10) BARE	LF	0
0620	2004	ELEC CONDR (NO. 2) INSULATED	LF	11322
0620	2006	ELEC CONDR (NO. 3/0) INSULATED	LF	0
0620	2008	ELEC CONDR (NO. 4) INSULATED	LF	0
0624	2014	GROUND BOX TY D (162922) W/APRON	EA	3
0628	7010	ELEC SRV TY S (480V) 400A (SS) PS (U)	EA	0
0628	7011	ELEC SRV TY S/E (480V) 400A (SS) PS (U)	EA	0
0858	7002	RAMP TOLL GANTRY (24")	EA	0

ITS SHEET SUMMARY 9 OF 12

ITEM NO.	DESC.	ITEM DESCRIPTION	UNIT	TOTAL
0416	7005	DRILL SHAFT (CCTV MTS) (48 IN)	LF	0
0425	7002	PRESTR CONC CAMERA POLE (40')	EA	0
0624	7001	GROUND BOX TY FO (484860) W/APRON	EA	1
0628	7006	ELEC SRV TY MPE (120/240) 5KVA (SS) PS (U)	EA	0
0628	7007	ELC SRV TY MPE (120/240) 10KVA (SS) PS (U)	EA	0
0628	7008	INS OH SN SUP (40 FT CANT) (DMS)	EA	0
0650	7004	COMMUNICATIONS HUT (101208)	EA	0
0852	7002	MULTIDUCT CONDUIT (PVC) (4-1.25" DUCT)	EA	160
0860	7001	MULTIDUCT CONDUIT (RM) (4-1.25" DUCT)	LF	0
0860	7002	MULTIDUCT CONDUIT (FIBERGLASS) (4-1.25" DUCT)	LF	1053

NO.	DATE	REVISION	APPROV.

CORRIDOR NAME

NTTA®
NORTH TEXAS TOLLWAY AUTHORITY

ROADWAY EXAMPLE STANDARDS MANUAL

STA 1183+00 TO STA 1195+00
SHEET 26 OF 29

COMPANY LOGO

SECTION

DRAWN CAS DATE 02/08 DESIGNED RDW DATE 02/08
CHECKED RDW DATE 02/08 SCALE 1"= 100'

CONTRACT NO. XXXXX-XXX-XX-XX-XX SHEET ___ OF ___

8:17:19 AM

$$$REFLOC$$$10
$$$REFLOC$$$08
$$$REFLOC$$$06
$$$REFLOC$$$04
$$$REFLOC$$$02
$$$REFLOC$$$09
$$$REFLOC$$$07
$$$REFLOC$$$05
$$$REFLOC$$$03
$$$REFLOC$$$01
rkinyua
100.0000 ft / IN.
7/2/2008 8:17:19 AM
\\dalw00\projects\42436\Maintenance\RESM\B28BRESM25.dgn

0 50 100 150 200
HORIZ. SCALE IN FEET

N

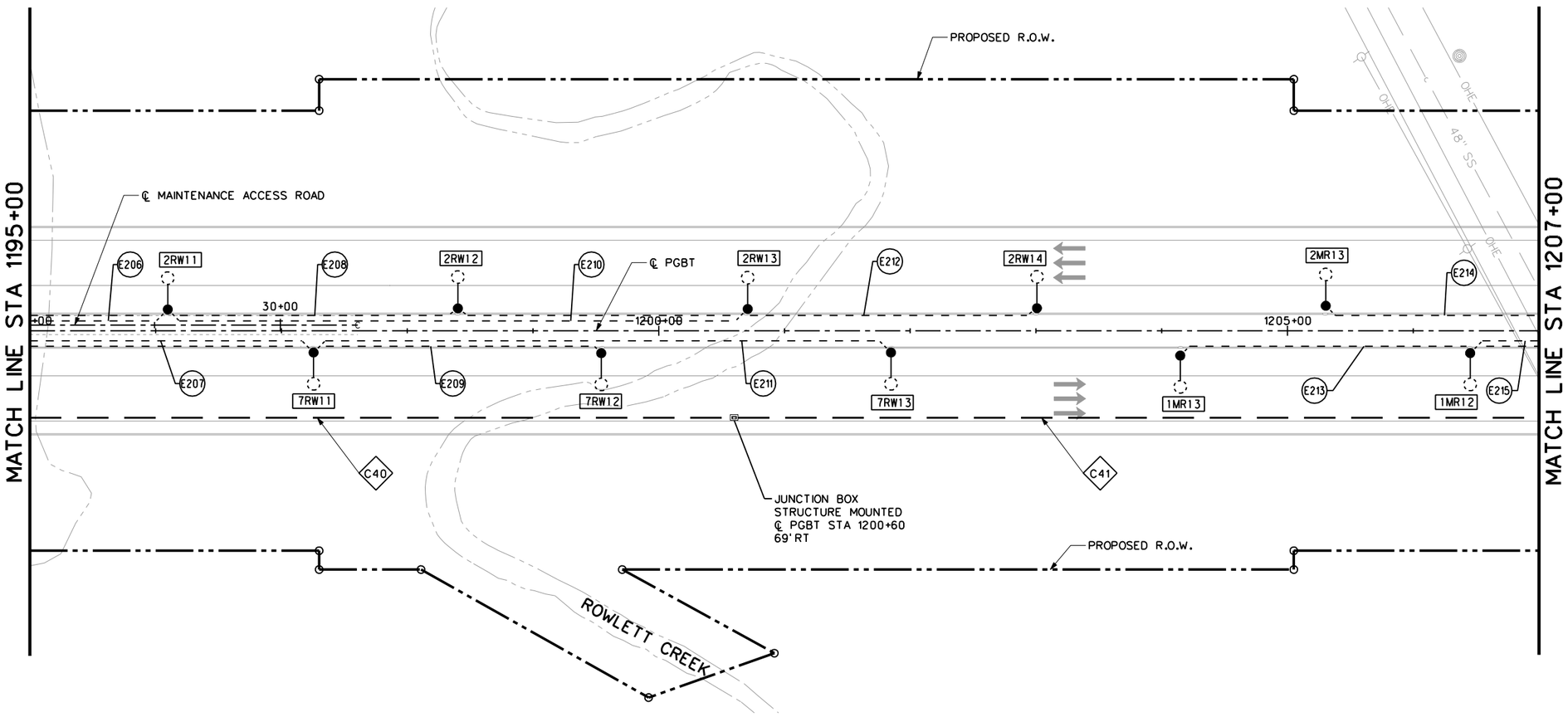

NOTES:

1) REFER TO LAYOUT FOUNDATION SHEETS FOR MORE INFORMATION.

2) REFER TO JUNCTION BOX STRUCTURE MOUNTED DETAIL SHEET FOR MORE INFORMATION.

3) REFER TO NTTA STANDARD ITS-001(1)-2004 FOR TYPICAL FIBER OPTIC CONDUIT AT OVERPASS BRIDGES.

ELECTRICAL SHEET SUMMARY 10 OF 12

ITEM NO.	DESC.	ITEM DESCRIPTION	UNIT	TOTAL
0618	2018	CONDUIT (PVC) (SCHD 40) (2")	LF	3070
0618	2022	CONDUIT (PVC) (SCHD 40) (3")	LF	0
0620	2009	ELEC CONDR (NO. 6) BARE	LF	3070
0620	2013	ELEC CONDR (NO. 10) BARE	LF	0
0620	2004	ELEC CONDR (NO. 2) INSULATED	LF	6140
0620	2006	ELEC CONDR (NO. 3/0) INSULATED	LF	0
0620	2008	ELEC CONDR (NO. 4) INSULATED	LF	0
0624	2014	GROUND BOX TY D (162922) W/APRON	EA	8
0628	7010	ELEC SRV TY S (480V) 400A (SS) PS (U)	EA	0
0628	7011	ELEC SRV TY S/E (480V) 400A (SS) PS (U)	EA	0
0858	7002	RAMP TOLL GANTRY (24")	EA	0

ITS SHEET SUMMARY 7 OF 12

ITEM NO.	DESC.	ITEM DESCRIPTION	UNIT	TOTAL
0416	7005	DRILL SHAFT (CCTV MTS) (48 IN)	LF	0
0425	7002	PRESTR CONC CAMERA POLE (40')	EA	0
0624	7001	GROUND BOX TY FO (484860) W/APRON	EA	1
0628	7006	ELEC SRV TY MPE (120/240) 5KVA (SS) PS (U)	EA	0
0628	7007	ELC SRV TY MPE (120/240) 10KVA (SS) PS (U)	EA	0
0628	7008	INS OH SN SUP (40 FT CANT) (DMS)	EA	0
0650	7004	COMMUNICATIONS HUT (101208)	EA	0
0852	7002	MULTIDUCT CONDUIT (PVC) (4-1.25" DUCT)	EA	0
0860	7001	MULTIDUCT CONDUIT (RM) (4-1.25" DUCT)	LF	0
0860	7002	MULTIDUCT CONDUIT (FIBERGLASS) (4-1.25" DUCT)	LF	1200

NO.	DATE	REVISION	APPROV.

CORRIDOR NAME

NTTA®
NORTH TEXAS TOLLWAY AUTHORITY

ROADWAY EXAMPLE STANDARDS MANUAL

STA 1195+00 TO STA 1207+00
SHEET 27 OF 29

COMPANY LOGO

SECTION

DRAWN CAS DATE 02/08 DESIGNED RDW DATE 02/08
CHECKED RDW DATE 02/08 SCALE 1"= 100'

CONTRACT NO. XXXXX-XXX-XX-XX-XX SHEET ___ OF ___

8:17:42 AM

$$$REFLOG$$$10 .....
$$$REFLOG$$$08 .....
$$$REFLOG$$$06 .....
$$$REFLOG$$$04 .....
$$$REFLOG$$$02 .....
$$$REFLOG$$$09 .....
$$$REFLOG$$$07 .....
$$$REFLOG$$$05 .....
$$$REFLOG$$$03 .....
$$$REFLOG$$$01 .....
rkinyua
100.0000 ft / IN.
7/2/2008 8:17:42 AM
\\dalw00\projects\42436\Maintenance\RESM\B28BRESM26.dgn

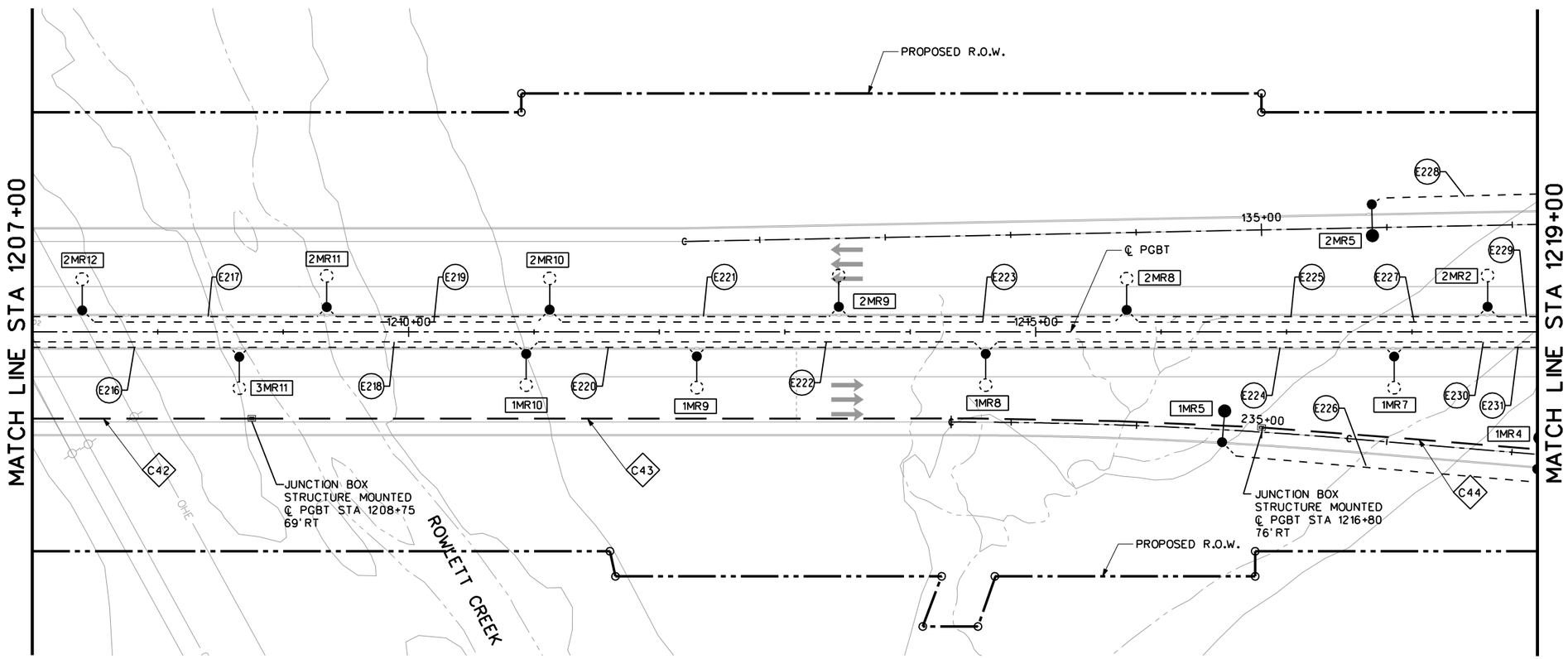

0 50 100 150 200
HORIZ. SCALE IN FEET

N

NOTES:

1) REFER TO LAYOUT FOUNDATION SHEETS FOR MORE INFORMATION.

2) REFER TO JUNCTION BOX STRUCTURE MOUNTED DETAIL SHEET FOR MORE INFORMATION.

3) REFER TO NTTA STANDARD ITS-001(1)-2004 FOR TYPICAL FIBER OPTIC CONDUIT AT OVERPASS BRIDGES.

ELECTRICAL SHEET SUMMARY 11 OF 12

ITEM NO.	DESC.	ITEM DESCRIPTION	UNIT	TOTAL
0618	2018	CONDUIT (PVC) (SCHD 40) (2")	LF	5575
0618	2022	CONDUIT (PVC) (SCHD 40) (3")	LF	0
0620	2009	ELEC CONDR (NO. 6) BARE	LF	5575
0620	2013	ELEC CONDR (NO. 10) BARE	LF	0
0620	2004	ELEC CONDR (NO. 2) INSULATED	LF	11150
0620	2006	ELEC CONDR (NO. 3/0) INSULATED	LF	0
0620	2008	ELEC CONDR (NO. 4) INSULATED	LF	0
0624	2014	GROUND BOX TY D (162922) W/APRON	EA	8
0628	7010	ELEC SRV TY S (480V) 400A (SS) PS (U)	EA	0
0628	7011	ELEC SRV TY S/E (480V) 400A (SS) PS (U)	EA	0
0858	7002	RAMP TOLL GANTRY (24")	EA	0

ITS SHEET SUMMARY 11 OF 12

ITEM NO.	DESC.	ITEM DESCRIPTION	UNIT	TOTAL
0416	7005	DRILL SHAFT (CCTV MTS)(48 IN)	LF	0
0425	7002	PRESTR CONC CAMERA POLE (40')	EA	0
0624	7001	GROUND BOX TY FO (484860) W/APRON	EA	1
0628	7006	ELEC SRV TY MPE (120/240) 5KVA (SS) PS (U)	EA	0
0628	7007	ELC SRV TY MPE (120/240) 10KVA (SS) PS (U)	EA	0
0628	7008	INS OH SN SUP (40 FT CANT) (DMS)	EA	0
0650	7004	COMMUNICATIONS HUT (101208)	EA	0
0852	7002	MULTIDUCT CONDUIT (PVC) (4-1.25" DUCT)	EA	0
0860	7001	MULTIDUCT CONDUIT (RM) (4-1.25" DUCT)	LF	0
0860	7002	MULTIDUCT CONDUIT (FIBERGLASS) (4-1.25" DUCT)	LF	1200

NO.	DATE	REVISION	APPROV.

CORRIDOR NAME

NTTA®
NORTH TEXAS TOLLWAY AUTHORITY

ROADWAY EXAMPLE STANDARDS MANUAL

STA 1207+00 TO STA 1219+00
SHEET 28 OF 29

COMPANY LOGO | SECTION

DRAWN CAS DATE 02/08 DESIGNED RDW DATE 02/08
CHECKED RDW DATE 02/08 SCALE 1"= 100'

CONTRACT NO. XXXXX-XXX-XX-XX-XX SHEET ___ OF ___

8:18:04 AM

$$$REFLOG$$$10
$$$REFLOG$$$08
$$$REFLOG$$$06
$$$REFLOG$$$04
$$$REFLOG$$$02
$$$REFLOG$$$09
$$$REFLOG$$$07
$$$REFLOG$$$05
$$$REFLOG$$$03
$$$REFLOG$$$01
rkiyyuo
100.0000 ft / IN.
7/2/2008 8:18:04 AM
\\dalw00\projects\42436\Maintenance\RESM\B28BRESM27.dgn

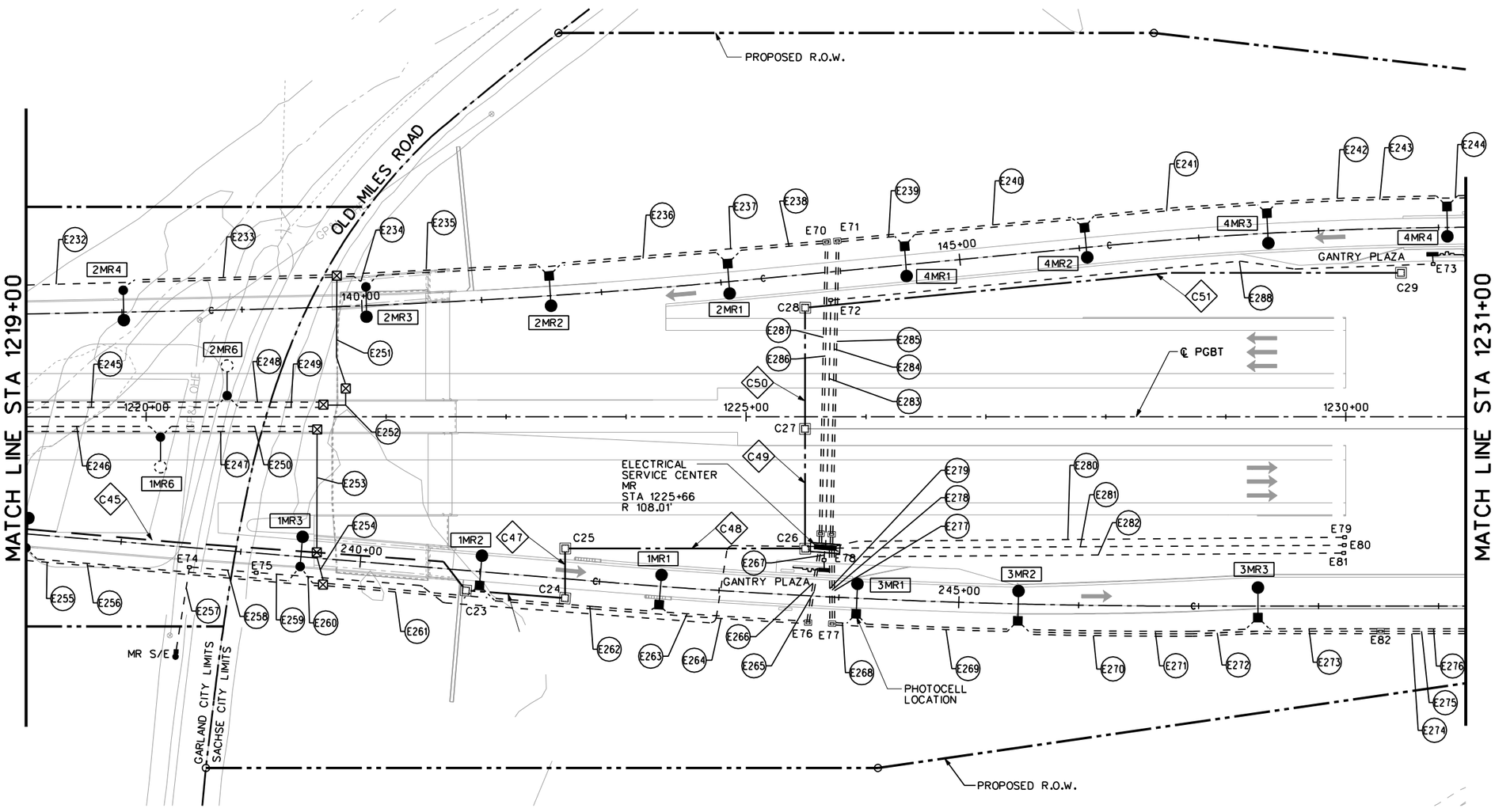

0 50 100 150 200
HORIZ. SCALE IN FEET

N

NOTES:

1) REFER TO LAYOUT FOUNDATION SHEETS FOR MORE INFORMATION.

2) REFER TO NTTA STANDARD ITS-001(1)-2004 FOR TYPICAL FIBER OPTIC CONDUIT AT OVERPASS BRIDGES.

3) REFER TO GANTRY POWER PLAN SHEETS FOR MORE INFORMATION ON THE ELECTRICAL SERVICE CENTER MR.

4) CONDUITS FROM PROJECT 02009-PGB-06-CN-EN TO BE CONNECTED TO GROUND BOXES CONSTRUCTED IN PROJECT 02007-PGB-06-CN-EN.

5) REFER TO GANTRY POWER PLAN FOR CONDUIT RUNS FOR POWER FEEDS INTO PROJECT 02009-PGB-06-CN-EN.

ELECTRICAL SHEET SUMMARY 12 OF 12

ITEM NO.	DESC.	ITEM DESCRIPTION	UNIT	TOTAL
0618	2018	CONDUIT (PVC) (SCHD 40) (2")	LF	9796
0618	2022	CONDUIT (PVC) (SCHD 40) (3")	LF	650
0620	2009	ELEC CONDR (NO. 6) BARE	LF	10446
0620	2013	ELEC CONDR (NO. 10) BARE	LF	0
0620	2004	ELEC CONDR (NO. 2) INSULATED	LF	19592
0620	2006	ELEC CONDR (NO. 3/0) INSULATED	LF	1300
0620	2008	ELEC CONDR (NO. 4) INSULATED	LF	0
0624	2014	GROUND BOX TY D (162922) W/APRON	EA	13
0628	7010	ELEC SRV TY S (480V) 400A (SS) PS (U)	EA	1
0628	7011	ELEC SRV TY S/E (480V) 400A (SS) PS (U)	EA	1
0858	7002	RAMP TOLL GANTRY (24")	EA	0

ITS SHEET SUMMARY 7 OF 12

ITEM NO.	DESC.	ITEM DESCRIPTION	UNIT	TOTAL
0416	7005	DRILL SHAFT (CCTV MTS)(48 IN)	LF	0
0425	7002	PRESTR CONC CAMERA POLE (40')	EA	0
0624	7001	GROUND BOX TY FO (484860) W/APRON	EA	7
0628	7006	ELEC SRV TY MPE (120/240) 5KVA (SS) PS (U)	EA	0
0628	7007	ELC SRV TY MPE (120/240) 10KVA (SS) PS (U)	EA	0
0628	7008	INS OH SN SUP (40 FT CANT) (DMS)	EA	0
0650	7004	COMMUNICATIONS HUT (101208)	EA	0
0852	7002	MULTIDUCT CONDUIT (PVC) (4-1.25" DUCT)	EA	1074
0860	7001	MULTIDUCT CONDUIT (RM) (4-1.25" DUCT)	LF	0
0860	7002	MULTIDUCT CONDUIT (FIBERGLASS) (4-1.25" DUCT)	LF	330

NO.	DATE	REVISION	APPROV.

CORRIDOR NAME

NTTA®
NORTH TEXAS TOLLWAY AUTHORITY

ROADWAY EXAMPLE STANDARDS MANUAL

STA 1219+00 TO STA 1231+00
SHEET 29 OF 29

COMPANY LOGO

SECTION

DRAWN CAS DATE 02/08 DESIGNED RDW DATE 02/08
CHECKED RDW DATE 02/08 SCALE 1"= 100'

CONTRACT NO. XXXXX-XXX-XX-XX-XX SHEET ___ OF ___

8:18:31 AM

$$$REFLOG$$$10
$$$REFLOG$$$08
$$$REFLOG$$$06
$$$REFLOG$$$04
$$$REFLOG$$$02
$$$REFLOG$$$09
$$$REFLOG$$$07
$$$REFLOG$$$05
$$$REFLOG$$$03
$$$REFLOG$$$01
rkinyua
100.0000 ft / IN.
8:18:31 AM
7/2/2008
\\dalw00\projects\42436\Maintenance\RESM\B28BRESM28.dgn