Maintenance Design Guidelines Manual

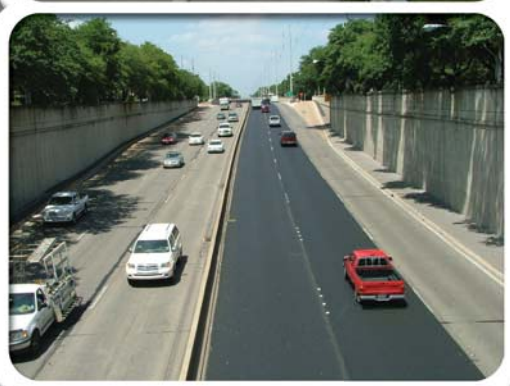

September 2008

NTTA
NORTH TEXAS TOLLWAY AUTHORITY

Table of Contents

Chapter 1 – Introduction/Purpose of Manual	1
Chapter 2 – Plans, Specifications and Estimates (PS&E)	3
Chapter 3 - Visual Quality	6
Chapter 4 – Typical Sections	7
Chapter 5 – Roadway Plan & Profile Sheets	9
Chapter 6 – Roadside Traffic Barrier and Rail	11
Chapter 7 – Maintenance Access	13
Chapter 8 – Mechanically Stabilized Earth (MSE) Walls	14
Chapter 9 – Sound Walls	16
Chapter 10 – Bridges	17
Chapter 11 - Drainage	19
Chapter 12 – Pavement Markings and Markers	22
Chapter 13 – Signs	23
Chapter 14 – Signals	25
Chapter 15 – Landscape	26
Chapter 16 – Toll Collection & Gantries	30
Chapter 17 – Sand Stockpiles	31
Chapter 18 – Utilities	33
Chapter 19 – Electrical, Lighting & ITS	34
Chapter 20 - Facilities	35

Chapter 21 – Miscellaneous 38

Chapter 22 – Asset Data Collection 39

Glossary 40

Appendix A – NTTA Crash Attenuator Guidelines

Appendix B – NTTA Maintenance Access Design Details

Chapter 1: Introduction/Purpose of Manual

NTTA Mission

The North Texas Tollway Authority (NTTA) is dedicated to fulfilling its mission to provide a fiscally sound system of innovative toll facilities, services and solutions that improves the mobility, quality of life and economy of the North Texas Region. Within this framework, the mission of the NTTA Maintenance Department is to manage resources and create business processes to continuously develop and implement asset management practices. To meet the goals established by the mission, the NTTA employs the following principles: (1) provide a safe environment by recognizing and responding to safety issues, (2) anticipate and respond to the customer's needs, (3) deliver constant, consistent stewardship of assets, and (4) achieve continuous improvement of its operations through performing in newer and better ways.

Total Project Process

The NTTA is working to modify the linear process of schematic planning, design, construction and maintenance to one that produces a sustainable and integrated model for project delivery. This new procedure involves the traditional project development phases and includes constant interaction between the various stakeholders throughout the entire process. (Planning coordinates with construction and design interacts with maintenance.) Maintenance needs to be considered from the beginning of design when the flexibility is the greatest for design changes. Meetings should be held with the Maintenance Department, if necessary, to share information, processes, methods and lessons learned. Addressing potential maintenance concerns during design lowers long-term maintenance costs, therefore, reducing the overall total life-cycle project cost. In addition, the traveling public/customers benefit by experiencing fewer lane closures and disruptions that are required to "fix" design elements that were not properly evaluated for maintainability.

The NTTA Asset Management Methodology

An Asset Management Methodology was adopted by the NTTA in 2002 and has been consistently utilized for system maintenance. This methodology is an improved way to protect NTTA assets (i.e. roadways, bridges, facilities) from increasing system demands, aging facilities and limited resources. This process is currently applied to the existing system by incorporating economic assessments of maintenance alternatives to make the most cost-effective maintenance decision. The NTTA can extend the life of the asset, improve its quality, and reduce its total life-cycle cost through conscientious budget practices that allocate operations and maintenance dollars in accordance with best practices. In addition, the NTTA employs stewardship of its assets through an accountability-driven process that ensures these public assets are being effectively maintained. This process, along with the regular inspection of the assets, provides the foundation for compliance with Governmental Accounting Standards Board Statement 34 (GASB 34).

Guidelines Supporting Methodology

The NTTA has developed the Maintenance Design Guidelines Manual with parameters that serve to guide designers toward holistic solutions that maintain and preserve the overall system. Designers shall develop all work in a manner that recognizes and respects the importance and commitment to maximizing maintenance practicality in the finished work.

The ongoing maintenance of a system cannot be overemphasized in project development and design. A holistic view by designers of life-cycle costs rather than a singular view of first costs ensures the maximum economic benefit and delivery of excellent service to NTTA customers. During the project development, the asset management methodology must be applied to enable decision-making in consideration of long-term performance, life-cycle cost and total project cost. It is the design engineer's responsibility to provide plans which address the life-cycle costs of assets. Early project cost estimate contingencies should allow for potential solutions that may cost more initially but which cost less over the life of the facility. The cost estimating procedure adopted by the GEC includes this element.

Visual quality is an important part of the NTTA maintenance management process. In addition to providing insights into the particular project for which maintenance considerations are made, visual quality evaluation can provide meaningful lessons that can be incorporated into future project development processes and Authority programs. Such evaluation is necessary to preserve commitments to project design, as well as to stakeholders, in particular internal Authority stakeholders and external funding partners. Perhaps the key management issue is determining if the proposed work requires a review process or response from the Visual Quality Assurance Manager or other interdisciplinary expert. This step is intended to provide timely information relative to appearance characteristics for effective decision-making, as well as provide the interdisciplinary framework for considering the positive and negative impacts of the proposed action.

The primary objective of the Manual is to orient planning, design, visual quality and project delivery toward life-cycle costs, recognize the economic efficiencies and achieve high performance of assets. Specific goals include reducing non-essential maintenance and limiting maintenance staff exposure when addressing these unnecessary issues. These goals can be accomplished by applying and updating the lessons learned and best practices, contained within this manual.

Chapter 2: Plans, Specifications and Estimates (PS&E)

Overview

This chapter provides a general summary of the asset management-driven design elements that the NTTA Maintenance Department evaluates during reviews of the various phases of plan development. Reviewing plans with a "maintenance mindset" enables inter-disciplinary collaboration that can minimize and/or eliminate maintenance-related issues in the design packages. An Asset Management Methodology should be applied to facilitate designs that consider long-term maintainability while keeping overall total life-cycle project cost in mind. This potential increase in initial cost should be evaluated early and taken into account when establishing the project budget. It is, therefore, the design engineer's responsibility to provide plans that address the life-cycle cost of NTTA's assets. Design elements that impact the Maintenance Department upon construction completion vary from typical sections to visual quality. For example, ditches need to be designed with a minimum slope to prevent standing water and should also be evaluated for potential erosion which, if needed, can be addressed during project development. Other examples of pertinent design elements that are reviewed include, but are not limited to:

1. Typical Sections
   - Ditch patterns/geometry
   - Roadway cross-slopes
   - Mowing widths
   - Mow strip locations
   - Metal beam guard fence (MBGF) and barrier locations

2. Traffic Control Plans
   - Longitudinal pavement joint locations
   - Drainage structures shown in phased construction
   - Foundations (large signs, illumination poles, etc.) shown in phased construction

3. Roadway Plan & Profile
   - Flume locations
   - MBGF and barrier locations
   - Maintenance access locations

4. Retaining Walls
   - Layouts
   - Sign and illumination foundation locations
   - Drainage structure locations

5. Bridges
   - Limits of riprap
   - Limits of flumes
   - Drainage from structure

6. Drainage
   - Desirable slopes
   - General alignments
   - Methods for sediment and erosion controls
   - Miscellaneous drainage details

7. Pavement Markings
   - Striping/Raised pavement marker (RPM) details
   - Delineators and object marker layouts

8. Signage
   - Small and large sign locations

9. Signals

10. Landscape
    - Vegetation layouts and details
    - Irrigation layouts and details
    - Erosion controls

11. Sand Stockpiles
    - Restroom location

12. Utilities

13. Illumination
    - Base sleeves required for all high mast illumination poles

14. Intelligent Transportation System (ITS)

15. Facilities
    - HVAC location, specs, size, details, etc.

16. Visual Quality

17. Geotechnical Information
    - Ensure that geotechnical engineers are reviewing all designs (i.e. pavements, retaining walls, bridges, etc.) that are based on the geotechnical report
    - Written confirmation from the geotechnical engineers that they have reviewed the designs and are in concurrence with the plans is mandatory

18. Project Warranty
    - Ensure proper documents are included in the construction contract that protects the NTTA against defective materials and/or workmanship at any time within two (2) years from the date of final acceptance. This will "bring the contractor to the table" and make them responsible for their final product thus ensuring the NTTA maintenance department inherits a quality product.

Designers shall develop all work in a manner that recognizes and respects the importance and commitment to maximizing maintenance practicality in the finished work. Subsequent chapters will provide additional guidelines related to the above design elements.

Chapter 3: Visual Quality

Overview

This chapter provides guidelines for the visual quality of the highway design elements associated with NTTA Tollway facilities. The design of these elements is critical to achieving the desired operational and safety features of roadway, as well as the desired visibility and aesthetics. As with any aspect of design, paying attention to visual quality requires careful consideration to context, continuity, constructability and cost once the basic geometric design has been established. An example includes "Off-the-Form Finishes" for concrete design elements such as bridge bents, retaining wall panels, and walls of sand stockpile facilities. Ultimately, investment in visual quality promotes transportation safety and efficiency, enhances established roadway design practices as an integral part of good design and leads to design excellence.

System Wide Design Guidelines

In 2004, The NTTA Board of Directors adopted System Wide Design Guidelines (SWDG) to establish and maintain a consistent high quality image, enhance the customer experience and promote aesthetic continuity and operational efficiencies on NTTA Tollway facilities. This vision for excellence also maintains and improves highway operational functions through a predictable roadside treatment process that places emphasis on solutions that are visually appealing, practical and sustainable (cost-effective). These guidelines should be supplemented by sound engineering judgment.

1. Aesthetic design
   - Communications shall be open between the designers and NTTA
   - Designers and NTTA shall continuously work together toward visual quality excellence for the project
   - Designers are encouraged to request design reviews and meetings to discuss and verify design progress related to visual quality
   - Designers shall be fully responsible for the aesthetic design and quality of the visual resources of a project and for fully complying with the most current edition of the SWDG during the project development process.
   - Designers shall discuss aesthetic design questions and issues with NTTA's VQAM
   - Contact the NTTA VQAM on matters related to compliance with SWDG

Chapter 4: Typical Sections

Overview

This chapter provides asset management-driven guidelines for cross-sectional design elements. When adequately designed and properly located, these elements contribute to the maintainability of the NTTA system. As an example, concrete barrier/rail is desired by the Maintenance Department because it is typically less costly to maintain than MBGF. Another example includes ditch slopes that are not traversable therefore making it difficult to mow. Addressing maintenance associated concerns during the design phase reduces the life-cycle cost of maintaining the roadway. The following guidelines should be supplemented by sound engineering judgment.

1. Mow Strips
   - Required at all areas where sod is adjacent to vertical structures (including but not limited to retaining walls, foundations, CCTV camera poles, sound walls, traffic rail/barrier, MBGF, ROW fence, etc.) and landscape areas; intent of mow strips is to simplify mowing operations along structures and to possibly reduce the need for herbicidal treatments
   - Not required in landscape areas (e.g. plants, groundcover excluding sod) adjacent to retaining walls and concrete railing
   - Must be independently identified in the plans

2. Riprap
   - Ensure use when slopes are steeper than 4:1
   - Ensure use in areas with less than eight feet of clear distance between obstructions such as structures, drainage elements and foundations
   - Must be independently identified in the plans
   - Minimize excessive use of riprap that contributes to a visually unattractive appearance; See System Wide Design Guideline (SWDG) Manual for additional guidance.

3. Flumes
   - Ensure use behind slotted concrete rail if adjacent to landscape areas
   - Ensure flumes have adequate expansion/contraction joints
   - Must be independently identified in the plans

4. Roadside Traffic Barrier and Rail
   - Follow current NTTA guidelines
   - Ensure proper placement and usage of railing along roadway; concrete barrier/rail is the desired method of protection
   - Ensure MBGF is used when drainage is an issue
   - Ensure a 10:1 cross slope for two feet minimum behind MBGF
   - Minimize length of MBGF by flattening slopes to 4:1 maximum cross slope whenever possible
   - Individual lengths of MBGF in excess of 200 feet require written justification and NTTA approval

5. Vegetation
   - Ensure all vegetation areas (e.g. between mainlanes and frontage roads, frontage roads and ramps, center medians, etc.) are clearly marked on all sections with a minimum and maximum width labeled
   - Ensure all vegetation items, methodology, soil improvements, etc., are properly labeled in a legend and follow NTTA policy
   - Ensure compost manufactured topsoil (CMT) is required for all sod locations
   - Ensure adequate soil cover (minimum six (6) inches) above rock layer to resist erosion and provide suitable depth for vegetation establishment

6. Mowing Widths
   - Ensure areas to be mowed maintain an eight (8) foot width (minimum); evaluate areas between foundations and rail elements and ramp gores

7. Ditch slopes
   - Ensure that grass-lined ditches maintain a minimum 0.5% longitudinal grade (unless required for permitting)
   - Ensure ditch side slopes are traversable/mowable with a 4:1 maximum
   - Ensure center median ditch slopes are traversable/mowable with a 6:1 maximum

8. Ditch cross sections - order of preference:
   - Flat bottom with width of six foot minimum
   - V-shaped ditch
   - Flat bottom with width less than six foot

9. Pavement Design
   - Ensure design is in accordance with current NTTA pavement design methodology
   - If the pavement design requires moisture barrier treatments, coordination with NTTA's landscape architects is required to discuss how this could affect proposed landscape and irrigation

10. Longitudinal Pavement
    - Joints shall be within one (1) foot of lane lines

11. Joint Sealant
    - Silicon-based joint sealant shall be specified for all sealed joints
    - Hot-poured rubber will not be permitted on new construction projects

12. Asphalt Concrete (AC) Pavements and Overlays
    - Specify SAC Class A aggregates

Chapter 5: Roadway Plan & Profile Sheets

Overview

This chapter provides asset management-driven design guidelines on roadway plans and profile sheets that address potential maintenance-related issues. For example, riprap is used to eliminate hand mowing and/or trimming in tight areas. These guidelines should be supplemented by sound engineering judgment.

1. Riprap
   - Ensure that limits of riprap are clearly identified
   - Ensure areas that are less than eight feet in width and that will not receive landscape (e.g. plants and ground cover) receive riprap
   - Ensure all areas less than eight feet wide and/or less than 100 feet in length should have riprap unless directed otherwise
   - If an area under a bridge is extensive, install riprap five feet wide minimum) along back of U-turn curb from point-of-curvature (PC) to point-of-tangency (PT); follow current NTTA Ground Cover Detail standards for limits of riprap between U-turns and abutments

2. Landscape
   - Provide one - six (6) inch and one - four (4) inch schedule 80 PVC sleeve, with a tracing wire attached, extending five (5) feet beyond the outside edges of the pavement for irrigation water and control wires; coordinate locations with NTTA's Landscape Architects
   - Provide a twenty-five (25) foot fiber coil and junction box for all irrigation controller locations; coordinate locations with NTTA's landscape architects

3. Ramp Gores
   - Flush gores are required at mainlane gore locations
   - Nose and/or gore areas should be reviewed for potential integrally colored stamped concrete due to impacts from vehicles, difficult growing location, maintainability and site visibility

4. Show all known utilities in the roadway layouts (at a minimum) and in the roadway profile (desirable); examples include high pressure gas lines, water/sanitary sewer mains and other noteworthy utilities

5. Maintenance Easements
   - Must be shown in the plan view
   - Must be clearly identified
   - Provide adequate access (12 foot minimum) adjacent to culvert aprons and wing walls

6. Right-of-Way limits must be clearly defined

7. Restrooms
   - Must be spaced per current OSHA requirements (e.g. one that can be reached within 10 minutes)

8. Turning Movements
   - Ensure turning movements, specifically U-turns and left turns, are navigable by WB-62 (desirable), WB-50 (minimum)

9. Fencing
   - Follow the latest edition of NTTA System-Wide Design Guidelines
   - Provide toll avoidance fencing only at locations expected to be problematic

Chapter 6: Roadside Traffic Barrier and Rail

Overview

This chapter provides asset management-driven design guidelines for roadside traffic barriers such as concrete barrier/rail and MBGF. Barriers adjacent to the travel lanes provide a safety component for the traveling public as well as for protection for personnel performing maintenance related activities behind the barriers. Because barriers are, in themselves, obstructions, designers should make every attempt to minimize their use. These guidelines should be supplemented by sound engineering judgment.

1. Ensure MBGF follows current TxDOT standards and guidelines for appropriate application and location

2. Ensure crash attenuators are selected for appropriate design speed, application and location; see Appendix A for additional information

3. Ensure rail plans are to the same scale as plan and profile sheets for clarity

4. Avoid the use of roadside barriers if the fixed object can be relocated or eliminated

5. Roadway layouts illustrating barrier/rail or MBGF locations shall show all roadside obstacles (e.g. foundations and structures) requiring protection

6. Ensure all blunt ends, obstacles, steep slopes, retaining wall ends, etc. are properly protected

7. Concrete barriers/rail is preferred in high traffic volume areas but MBGF can be used if required for drainage
   - Consider use of textured faces to decrease visually objectionable surface conditions that necessitate excessive corrective maintenance practices

8. Ensure a minimum of a 10 foot wide opening for mowing and landscape maintenance of vegetation areas; see Chapter 7 - Maintenance Access for additional information

9. All MBGF end treatments shall be hinged break-away types (e.g. SGT(8)H-05 and SGT(7)(HB)-03A) conforming to current TxDOT standards

10. MBGF
    - Ensure thrie beam transitions are required on all upstream connections between MBGF and concrete rail/barrier for speeds greater than 45 mph
    - Ensure that thrie beams are not placed on downstream ends of concrete rail/barrier transitions to MBGF unless it will be within the clear zone of opposing traffic

- Ensure the MBGF is a minimum of 2.5 feet from the obstacle being protected
- Minimize length of MBGF by flattening slopes to 4:1 maximum cross slope whenever possible
- Single runs in excess of 200 feet requires written justification and NTTA approval

Chapter 7: Maintenance Access

Overview

This chapter provides asset management-driven design guidelines for the proper location and design of ingress and egress along the NTTA system. Properly designed access points are required to provide safe access for maintenance personnel to perform activities such as mowing and landscape maintenance, while not compromising the safety and well being of the traveling public. Further details are provided in Appendix B. These guidelines should be supplemented by sound engineering judgment.

1. Maintenance access shall meet the following criteria:
   - Provide a 10 foot clear opening to the area to be maintained
   - Access "driveway" will consist of five inch riprap
   - Access point gates should only be provided when toll avoidance fence is installed along the frontage road; gates shall be10 feet wide (minimum)
   - Located in the safest possible place based on roadway design geometrics and sight distance
   - Cross slope at access area shall be 10:1 or flatter
   - Located a minimum of10 feet from the edge of the travel way to maintain shoulder width
   - Railing or MBGF offsets are approved access designs; gaps in railing or MBGF will not be permitted

2. General maintenance access location - order of preference:
   - From frontage road
   - From mainlanes
   - From ramp

3. Gantry access locations - order of preference:
   - From mainlanes
   - From ramp
   - From frontage roads

4. Provide at least one access point for every area that is isolated by non-traversable obstructions

5. When access is provided from the mainlanes, it should be located on the downstream end of the area for both safety and consistency

6. Access point should provide adequate access and positive protection for equipment and personnel during maintenance activities

7. Access points located on center medians should be located at 1 mile spacing (minimum) on alternating sides of roadway between mainlanes and ramps as needed

8. Access shall be provided at all bridge quadrants

Chapter 8: Mechanically Stabilized Earth (MSE) Walls

Overview

This chapter provides asset management-driven design guidelines for mechanically stabilized earth (MSE) walls that address current maintenance issues. Two examples of maintenance concerns include underdrains and filter fabric. Improperly placed underdrains may affect the way that they are accessed and cleaned which could lead to a reduction in their functionality. For MSE walls to perform as designed, they need to drain properly to reduce the potential of hydrostatic pressure behind the wall. Another example includes the filter fabric placed at the joint around the concrete panels. NTTA's maintenance personnel have noticed instances where sediment has escaped through the wall panel joints. This degradation behind the wall could compromise the structural integrity of the wall. Although the following are guidelines related to MSE walls, they should be supplemented by sound engineering judgment.

1. Underdrains
   - Ensure profiles and associated cleanout locations are shown on retaining wall layouts
   - Ensure cleanout details are shown
   - Ensure outfall locations are clearly identified
   - Ensure direct access to inlets, manholes or junction boxes
   - Ensure underdrains are a minimum of eight inches in diameter

2. Show drainage structures, major foundations and all utilities (existing/proposed, private and NTTA) on all wall plan and profiles, especially when these elements fall within the earth reinforcement limits

3. Require cement stabilized backfill around all drainage structures within the limits of the earth reinforcement limits

4. Require density controlled embankment in the upper limits of the retaining wall; this will reduce the settlement at the top of wall and flume

5. Retaining wall profiles
   - Ensure wall profiles are smooth with no sharp or abrupt changes

6. Show a jointed mow strips adjacent to retaining walls on retaining wall layouts details except if located in landscape bed areas; coordinate locations with NTTA's landscape architect

7. Ensure all runoff at retaining wall flume ends is collected and routed properly (i.e. inlets, channel, energy dissipation pad, etc.); direct outfall concentrated flow onto grassed areas will not be permitted

8. Provide a drainage plan to show limits and grading for flumes and riprap; provide details showing how the flume and riprap tie together and a toe detail for the flume

9. Ensure adequate number of retaining wall drains and flume drains are provided

10. Ensure flume drains are in all sag curves, not high points in wall profile

11. Ensure the use UV resistant filter fabric at panel joints to prevent sediment leakage

12. Riprap limits
    - Ensure limits are clearly shown
    - Ensure details are included on how to tie riprap into flume(s)

13. Show applicable mow strip locations

14. Use NTTA mounting details for fence on coping; posts directly embedded into walls or coping will not be permitted

15. Require proof rolling under leveling pad

16. Show limits for all proposed rail and/or barriers; concrete traffic barrier joints shall match joints in copings especially when using precast coping; this may reduce the number of cracks observed on the walls

17. Provide detailed foundation plans, where appropriate, showing foundation locations of all adjacent structures or utilities

18. Provide isolated joints for wall panels at locations of box culverts; this may reduce the number of cracks observed on the walls

Chapter 9: Sound Walls

Overview

This chapter provides asset management-driven design guidelines for sound walls as they relate to maintenance issues. As sound walls are considered a significant asset and have a direct relation with our bordering neighborhoods, it is imperative maintainability and accessibility, among other elements, is considered. These guidelines should be supplemented by sound engineering judgment.

1. Ensure compliance with NTTA's standards and the latest edition of the NTTA SWDG

2. Ensure internal structures are rust resistant

3. Consider use of textured faces to decrease visually objectionable surface conditions that necessitate excessive corrective maintenance practices

4. Ensure mow strips are installed adjacent to the sound wall level pad or foundation cap

5. Ensure drainage is diverted away from sound walls

6. Ensure adequate access (10 feet minimum) for maintenance vehicles is provided

Chapter 10: Bridges

Overview

This chapter provides asset management-driven design guidelines for bridge structures that may reduce or eliminate maintenance related issues. NTTA Maintenance Department needs to be involved during the schematic design to discuss maintainability issues. For example, the use of splash pads designed to handle expected run-off under rail drains will help to minimize erosion. Erosion has also been a maintenance issue at the terminus of bridge railing; a problem which proper flume use could address. These guidelines should be supplemented by sound engineering judgment.

1. To the extent practical, select bridge types, component details and finishing treatments that reduce long-term maintenance commitments

2. Column Protection
   - To the extent possible, do not locate columns within the creek and drainage flowlines
   - Use gabions mattresses or rock riprap to reduce/eliminate scour where appropriate or required
   - If barriers are on both sides of columns, backfill this area with appropriate material and cap with rip-rap; these areas tend to collect trash

3. Ensure concrete splash pads (10-foot by 10-foot, five (5) inches thick) are designed to handle expected run-off under elevated rail drains or at bridge bent drains; this will minimize erosion.

4. Apply designs that address potential structural cracking/failure primarily with respect to abutments and back walls. NTTA has identified numerous abutment back walls on their system with moderate to severe cracking. Causes range from geotechnical failures to movement from the approach slab acting on the back wall. (* NTTA is evaluating alternative details to address these issues.)

5. Ensure pavement temperature sensors are installed at each major interchange; coordination with NTTA Maintenance and IT Department is required

6. Concrete traffic barriers shall have one half inch joint opening (minimum) from base of rail to top of rail. These joints shall occur at the end of approach slabs and at the end of wing walls. Whenever concrete traffic barriers are attached to the abutment, the open joint shall be used at the transition to another support such as pavement, MSE walls, etc. These joints shall be called out on the drawings.
   (* NTTA is evaluating alternative details to address these issues.)

7. Geotechnical reports shall provide anticipated settlement of embankment supporting abutments. There is evidence that embankment for grade separations are continuing to move after the abutment is constructed; this is causing damage to concrete riprap and abutments

8. Flumes (with proper expansion/contraction joints) shall be specified at the end of concrete traffic barriers to capture bridge drainage

9. When riprap is used between the face of retaining wall and frontage road or U-turn curb, specify a three-quarter inch expansion joint at the wall to riprap interface to allow for wall movement

10. Areas beneath bridges shall have a surface that resists soil erosion such as brick pavement, rock riprap, concrete riprap, gabion mattress treatment, etc.; see current NTTA standards for more details

Chapter 11: Drainage

Overview

This chapter provides asset management-driven design guidelines for drainage systems as they relate to maintenance issues. The design engineer shall use "Best Management Practices" in designing roadway drainage systems. Drainage systems cannot be designed to handle extreme rainfall events such as 100-year intensities due to cost constraints; therefore the maintenance of designed drainage systems is very important. The following guidelines should be supplemented by sound engineering judgment.

1. Pipe Size
   - Twenty-four inch minimum diameter Reinforced Concrete Pipe (RCP); 18 inch minimum diameter RCP is permitted for storm pipe risers at retaining walls only
   - Ensure pipe runs are clearly labeled in the drainage plan and profile sheets
   - Ensure that drainage systems are properly sized for the applicable rainfall events

2. Ensure pipe velocities are a minimum two feet per second (fps)

3. Inlets
   - Ensure that inlets are placed out of the mainlanes pavement (proposed and future expansion) and spaced so that ponding width does not encroach onto mainlanes

4. Manholes
   - Ensure that they are placed along trunk lines (± 300 feet) to provide access for cleaning
   - Ensure manholes are placed out of the mainlane pavement (proposed and future expansion)

5. Where practical, try to match the new drainage structure to the natural contour/grade of the drainage channel/ditch/swale; this may reduce siltation in the structure and erosion along the outfall

6. Ensure proper design load and class of RCP for intended use

7. At bridge ends provide:
   - Flumes with adequate throats down embankment slopes; size throat width to adequately carry all drainage from bridge (i.e. zero carry-over); flumes should be designed to divert runoff away from the abutment wing walls
   - Area drains that adequately drain the entire bridge

8. Ensure junction boxes are properly located/spaced for cleaning access

9. Ensure that inlets are installed at all sags of vertical curves

10. Storm Sewer Alignments
    - Eliminate unnecessary bends
    - If designing bends are unavoidable, ensure that they do not exceed thirty-degrees (30°)
    - Laterals should tie into trunk lines pointing downstream

11. Show all Outfalls and Easements

12. Identify all known utility lines (e.g. gas, sanitary sewer, etc.) and their proximity to proposed drainage systems and structures

13. Ensure natural ground profiles are established and shown along drainage pipe centerline profiles

14. Show flow line (trunk lines and laterals) elevations and storm drain slopes (percent)

15. Ensure a minimum of three feet of cover is provided on all drainage structures (e.g. pipes/boxes/culverts) measured from top of drainage structure to bottom of pavement structure

16. Follow applicable NTTA drainage standards

17. Ponding will not be allowed through the gantry areas

18. Analyze existing cross drainage structures (e.g. culverts under existing frontage roads) for surcharge adequacy in proposed fill areas

19. All culvert aprons should include 18 inch toe walls in accordance with NTTA standard details

20. Include cement stabilized backfill around all laterals with slopes greater than 10 percent

21. Provide permanent erosion control devices for velocities greater than six feet per second (fps)

22. Ensure a minimum of one half percent longitudinal grade in grass lined ditches

23. Six (6) foot flat bottom ditches are desired for ease of maintenance. If not possible, use a V-bottom ditch. As a last option, use a less that six foot flat bottom ditch

24. Ensure area inlet grates are gradually depressed, six inches minimum, from the flow line of the ditch to eliminate potential erosion

25. Ensure upstream and downstream protection (stone riprap or gabions) at all culverts and drainage outfalls within proposed grading limits

26. Buttons/tiles are required on all frontage road inlets indicating "No Dumping"

27. Concentrated flow from outfall on grass or landscape areas will not be permitted; riprap or flumes shall be used to prevent or minimize erosion

28. Permanent best management practices (BMP's) shall be used for post-construction storm water control to address potential erosion on grassed side slopes or into landscape planting beds

29. All drain inlets located within or adjacent to landscape beds will have a two foot wide by eight inch deep rock riprap installed around the inlet perimeter; see NTTA Landscape Architects for locations

30. Detention ponds
    - Maintenance access is required at all detention ponds
    - Must be concrete lined
    - Must be designed to drain completely
    - Ensure that proper warning signage is placed around the perimeter of the pond
    - Ensure fencing that conforms with the latest edition of the NTTA SWDG is placed around the entire perimeter of the pond; fence must include a mow strip and a 10 foot gate for maintenance access

31. Contractor shall video (on DVD media) drainage system upon construction completion per general notes/specs; video (which will include date and identified trunk run) will become the property of NTTA

32. Follow the TxDOT Hydraulic Design Manual for hydraulic design

33. Gantry area (mainlane and ramp)
    - Follow NTTA guidelines for drainage design
    - Attempt to locate gantry at the crest of the vertical curve to facilitate drainage away from the gantry; ponding is not permitted

34. Provide access (12 foot minimum) adjacent to culvert aprons and wing walls that cannot be accessed by maintenance personnel and their equipments from the right-of-way

35. Coordination is required with city(s) before any drainage design is conducted along the frontage road(s)

Chapter 12: Pavement Markings and Markers

Overview

This chapter provides asset management-driven design guidelines for striping and raised pavement markings (RPM's). All striping and raised pavement markings (RPM's) applications on NTTA roadway facilities must meet at a minimum, the prescribed standards required by NTTA, TxDOT, and Texas Manual on Uniform Traffic Control Devices (TMUTCD), as well as the specific guidelines outlined in this chapter. These guidelines should be supplemented by sound engineering judgment.

1. Ensure striping type is per NTTA standards

2. Require prefabricated pavement markings; Ensure Type B prefabricated tape is used for longitudinal striping and Type C is used for transverse (intersection) striping, words and symbols

3. Ensure striping pay item numbers are per TxDOT specifications

4. Cross-hatch striping at entrance gores is not permitted

5. Ensure RPM's are per latest NTTA standards

6. Ensure compliance with the latest edition of the TMUTCD

7. Ensure delineators on pavement sections are of the self-correcting type

Chapter 13: Signs

Overview

This chapter provides asset management-driven design guidelines for signage. All signage must meet at a minimum the TxDOT, TMUTCD and NTTA prescribed standards for clarity, maintainability, durability and safety as well as the specific guidelines outlined in this chapter. Specific guidelines include, but are not limited to, the following specific elements: location, material, signage types, installation and sign appurtenances. See applicable appendices for additional information. These guidelines should be supplemented by sound engineering judgment.

1. Ensure sign supports are properly located clear of the roadway per TxDOT standards

2. Ensure sign supports follow TMUTCD standards

3. Ensure signs conform to the NTTA Sign Policy and NTTA Sign and Traffic Control Device Guidelines

4. Large signs (generally defined as greater than 64 square feet)
   - Ensure all are constructed of extruded aluminum
   - Ensure the use of Type IX sheeting
   - Screen printing will not be permitted

5. Small signs (generally defined as equal to or less than 64 square feet)
   - Ensure all are constructed of plate or sheet metal
   - Ensure all are mounted on approved breakaway sign supports
   - Screen printing will not be permitted
   - Ensure installation on triangular slip-bases

6. Avoid placing signs in a ditch; this could impede drainage, make mowing difficult and result in erosion or siltation around the sign support

7. Ensure all signs have a space on sign summary sheets that allows a sign ID for input into NTTA's Asset Management Program – Hansen Database

8. Cantilever Overhead Sign Structure (COSS)
   - Provide square concrete riprap/apron (a minimum of two-feet from the structure) around all COSS supports
   - Leave no vegetation between COSS supports and MBGF unless greater than eight feet

9. Provide proper signage for elected representatives per the NTTA Sign Policy and/or Guidelines

10. Signs and trailblazers shall be installed per NTTA Sign Policy and/or Guidelines

11. Provide hospital plaques on overhead signs in accordance with NTTA Sign Policy and/or Guidelines

12. Provide airport plaques or trailblazing on overhead signs in accordance with NTTA Sign Policy and/or Guidelines

13. Ensure station markers are mounted on median rail at 500 foot spacing and at station equations

14. To the extent possible, avoid excessive signing which not only contributes to visual clutter that impacts visual quality in the roadway environment, but increases maintenance commitments and safety

15. Linear Delineation Panels (LDS)
    - Ensure installation on concrete barriers/rail for curves with a 1,500 foot radius or less
    - Ensure installation on concrete barriers/rail for curves with a 20 degree delta

16. Concrete Barrier/Rail Delineation
    - Temporary barriers for traffic control should be delineated per TxDOT Barricade and Construction (BC) standards
    - Permanent barriers to divide opposing direction of traffic should follow TxDOT Delineator & Object Marker standards
    - Permanent barriers used for cross-over protection in wide medians should follow TxDOT Delineator & Object Marker standards

Chapter 14: Signals

Overview

This chapter provides asset management-driven design guidelines necessary to provide quality signal systems. These guidelines are in addition to all federal, state, TxDOT and local requirements applicable to signal systems. Achieving the most feasible and ideal maintenance activity level with respect to signal systems is the primary purpose of this chapter's guidelines. Key concepts include maintenance accessibility, equipment location/ protection and consistency in signal system types and replacement parts to name a few. These guidelines should be supplemented by sound engineering judgment.

1. Ensure compliance with TxDOT standards

2. Coordinate with the adjacent municipality during the design phase

3. All signal controllers shall comply with National ITS standards; proprietary software will not be permitted

4. Appearance characteristics must be coordinated with NTTA Visual Quality Assurance Manager (VQAM)

Chapter 15: Landscape

Overview

This chapter provides asset management-driven design guidelines for turf, landscape and irrigation elements. These guidelines address landscape aesthetics and sustainability considerations which include: landscape design, yet one which minimizes life cycle maintenance costs. These guidelines address important issues such as, but not limited to, types of landscape components, lessons learned, best practices, locations, placement, drainage issues, side slopes, ditch perimeters and irrigation. All landscape designs must meet all requirements outlined in the latest edition of the NTTA SWDG.

Vegetation and Pre-Landscape Design Standards

1. Use bermuda sod only; with a minimum 1 1/2 inch soil bed; no temporary or permanent seeding is permitted unless approved by the NTTA landscape manager

2. Four inches of compost manufactured topsoil (CMT) is required for soil preparation for all bermuda sod

3. Use bermuda sod in all non-pavement or non riprap areas

4. Riprap is required for all areas less than eight feet in width

5. No slopes greater than 3:1 – preferably none greater than 4:1

6. Six foot flat bottom ditches are desired for ease of maintenance. If not possible, use a V-bottom ditch. As a last option, use a less that six foot flat bottom ditch

7. Mow strips with post cut outs are required under newly installed MBGF

8. Mow strips are required at base of all vertical structure members (retaining walls, SSR, SSB, etc.) adjacent to sod areas

9. Mow strips are not required at the base of vertical structures in areas which will be landscaped; coordinate locations with NTTA's landscape architects

10. All new ROW and toll avoidance fencing requires mow strip if fence located within vegetation area

11. Provide concrete aprons around all fiber/communications and electrical boxes embedded in earth per TxDOT standards

12. Provide concrete aprons around all sign supports,ITS supports (e.g. camera support poles and dynamic message sign columns) and similar elements placed in vegetative areas

13. On roadway construction plans, distances between roadway and frontage roads, width between frontage roads and ramps, width of center medians, etc. should include minimum and maximum distances and not just denoted as varies

14. Show proposed surface treatments for all areas in typical sections

15. Clearly illustrate and identify project limits, ROW and all easements and ownership and/or maintenance responsibility

16. Provide drivable access to all vegetative areas for maintenance activities – see Appendix B for details

17. Follow current NTTA Standards on how to address areas under bridges where vegetation will not grow due to lack of sunlight and/or water

18. Provide riprap system at all culvert outfalls to serve as energy dissipater to reduce soil erosion

19. Collect all runoff from retaining wall flumes and transport utilizing paved and/or pipe system to prevent direct runoff to vegetation from wall flumes

20. Hay bales are not permitted for temporary or permanent erosion control. Specify silt fence, compost sock or Best Management Practices (BMP)

21. A 110v electrical service will need to be provided at each irrigation controller location for the operation of the irrigation system; coordinate locations with NTTA's landscape architects

22. Provide a fifty (50) foot fiber coil and junction box for all irrigation controller locations; coordinate locations with NTTA's landscape architects

23. Where an open cut trench is feasible, provide one six (6) inch and one four (4) inch schedule 80 PVC sleeve with tracing wire attached four (4) feet below grade and extending five (5) feet beyond outside edge of pavement for irrigation water and control wires per NTTA irrigation standards; coordinate locations with NTTA's landscape architects

24. Where open cut trench installation is not possible; provide one six (6) inch and one four (4) inch HDPE sleeves with SDR-11 rating with tracing wire inside conduit four (4) feet below grade and extending five (5) feet beyond outside edge of pavement for irrigation water and control wires. Coordinate locations with NTTA's landscape architect and follow NTTA irrigation standards.

25. Pavement design which includes moisture barrier treatments need to be designed to allow for land scape and irrigation implementation near pavement edge per NTTA Moisture Barrier Detail standard

26. To the extent practical and/or required by law (and approved by the Authority), preserve and protect unusual vegetation features and special habitat environments. Mitigate vegetation requiring preservation and protection when disturbed consistent with project requirements and compliance with 1998 TxDOT - TWPD MOU

Landscape Design General Standards

1. Landscape design activities will adhere to the current NTTA SWDG
2. Only native or adapted plant material will be utilized
3. Planting design should reflect a mix of ornamental grasses, shrubs and trees
4. A minimum of 20 canopy or understory trees per landscape bed acre is required (includes evergreens) for design scale and air quality issues
5. Plant selection will consider low or minimal life cycle maintenance requirements
6. Plant descriptions shall include height and spread requirements in addition to root condition (balled and burlaped or container grown), container size and/or caliper, and spacing requirements
7. Planting locations should consider construction and maintenance accessibility
8. Nose and/or gore areas should be reviewed for potential integrally colored stamped concrete due to impacts from vehicles, difficult growing location, maintainability and site visibility
9. Ensure planting design will follow TxDOT's design standards for horizontal clearance
10. Ensure sight distances are never compromised
11. Line of sight must be maintained around and within main lane gantry for safety and security reasons
12. Plant material must be adequately set back or positioned to eliminate overhanging foliage/branches onto roadway pavement, signage, guardrail and adjacent properties, etc.
13. Drainage swales must be unimpeded and remain stable at all times
14. Drainage flow to inlets must be preserved during and after construction
15. All drain inlets located within or adjacent to landscape beds will have 2 foot wide x 8 inch depth rock riprap installed around inlet perimeter

16. Planting will not be allowed in any swales and only permitted on the "side slopes" of the median; swales shall be lined with turf or rock rip-rap.

17. Roadway surface drainage patterns must be considered during landscape design to prevent erosion issues

18. All existing vegetation shall be eradicated in all planting bed locations prior to irrigation and plant installation

19. Soil tests are required for each SWDG focus area to determine soil amendment requirements.

20. Compost four (4) inches will be incorporated into the top eight (8) inches of the existing soil mixed to a depth of twelve (12) inches as part of bed preparation for landscape areas

21. Hardwood mulch (3 inch applied, 2 inch settled) will be used as top dressing after irrigation and plants are installed

22. Irrigation design shall incorporate the latest water conservation principles and practices

23. Sub-surface drip irrigation is the preferred method of irrigation. If rotors or spray heads are required the design will eliminate the possibility of water spraying onto pavement in all circumstances

24. The irrigation central control system will be implemented utilizing the NTTA's fiber optic communication network

25. The irrigation system shall incorporate back flow prevention, master valves, flow meters, isolation valves, rain/freeze/wind sensors (if above ground irrigation utilized), moisture sensors, ET gauge(s) and, if appropriate, weather station(s)

26. Municipal water tap locations and pressures need to be identified on the plans and verified before contract letting

27. A one (1) or two (2) year maintenance/warranty period following landscape construction acceptance is required depending on the size of project

28. Maintenance and plant replacement provisions during the construction phase are required

29. Following construction acceptance, the landscape and irrigation system and all components must be as designed and in proper operating condition

Chapter 16: Toll Collection & Gantries

Overview

This chapter provides asset management-driven design guidelines associated with for toll collection and gantry systems. As all electronic toll collection (All-ETC) system are a significant component to tollway operations, maintainability, accessibility, and asset integrity with regards to tolling systems is paramount. These guidelines should be supplemented by sound engineering judgment.

1. Ensure a ten (10) foot minimum clearance around gantry columns for maintenance access, when possible

2. Ensure adequate power and fiber drops per NTTA standards

3. Avoid gantry site locations with space limitations that preclude safe and proper design for regular user access

4. Light Emitting Diodes (LED) Displays
   - Recommended for improved operations by allowing flexible lane use
   - Being evaluated for All-ETC gantries for improved traffic operations

Chapter 17: Sand Stockpiles

Overview

This chapter provides asset management-driven design guidelines for sand stockpiles. Snow and ice events place a significant demand upon the resources of the NTTA Maintenance Department and require pro-active management and response to facilitate safe travel and operations. It is imperative that sand stockpiles are evaluated, accounted for, strategically placed and constructed in a manner that supports the successful execution of the NTTA's snow and ice mitigation plan.

The sand stockpile design guidelines address the location, spacing, placement and functionality parameters that include: sizing, accessibility, aesthetics, capacity and maneuverability associated with the NTTA system. Additionally, each stockpile location must adhere to the latest concrete finishes requirements per direction by the NTTA. The following guidelines should be supplemented by sound engineering judgment.

1. Size and Geometry
   - Ensure stockpile bins are sized based on quantity determined by NTTA for snow and ice mitigation plan update
   - Ensure the entire stockpile footprint properly drains
   - Ensure the location can be accessed by WB-50 (minimum)

2. Concrete Finishes on Bin Walls
   - Ensure that the latest edition of NTTA SWDG and specifications are followed
   - Coordinate with local entities when required

3. Location
   - Spaced six miles desirable, 10 mile maximum and within one half mile each way of a turn around
   - Site locations must be evaluated for visual compatibility with adjacent property uses, including NTTA roadway corridors, and preference for permanent dry cover over sand storage bins (such as beneath mainlane bridges)

4. When TxDOT cast-in-place concrete wall standards are used, provide details for wall corner and intersections; each panel must be designated with construction and expansion joints called out on the plans.

5. Right-of-Way Fence and Gates
   - Ensure fence panel clearance from finished grade to prevent blockage by debris and drainage problems
   - Ensure finished slab elevation will not impede the function of the gate
   - Ensure fences and gates comply with the latest edition of the NTTA SWDG

6. Ground Cover
   - In disturbed areas under the shade of the bridge, refer to the NTTA Groundcover Standard and coordinate with the NTTA's Visual Quality Assurance Manager regarding groundcover type (e.g. riprap, pavers, etc.)

7. Restrooms
   - Permanent restroom facility is required at each location
   - Require water and sanitary sewer service

8. Ensure that all utilities, including NTTA's, are properly identified and located during design

9. Lighting Level
   - Maintain a minimum of 25-foot candles at the pavement level throughout the site
   - Locate lighting in such a manner that it is serviceable while the bins are full and in service

10. Fabric on steel frames (e.g. covers) are required if stockpile bins are not located under bridges; these "covers" must be in compliance with the latest edition of the NTTA SWDG

11. Generator plug(s)
    - Attachments are required at the electrical panel
    - Electrical panel must be controlled by a "Kirk KeyTM" or equal mechanical interlock feature to ensure operation on energy producing apparatus cannot be energized simultaneously with normal utility power and vice versa.

Chapter 18: Utilities

Overview

This chapter provides asset management-driven design guidelines for existing or proposed utilities. All utilities must be accounted for and reflected in plan and profile plan sheets to avoid utility obstruction, disruption or utility conflict. All franchise utilities as well as NTTA-owned utilities be accounted for and appropriately illustrated in various plan sheets to avoid any form of utility conflict. Consideration should be given to location, alignment, encasement requirements, future expansion and all federal, state, local and NTTA requirements. These guidelines should be supplemented by sound engineering judgment.

1. Ensure all utility contact information is listed in the General Notes

2. Ensure all existing utilities are in plan and profile view, are clearly marked with encasement length and material, with legend or otherwise and beginning/termination points are identified

3. Generally, ensure existing utilities are not in direct conflict with proposed utilities

4. Ensure proposed utilities are in compliance with NTTA's recommendations with respect to buried depth, location along roadway, etc.

5. Ensure all proposed utility relocations are evaluated for their impact on future landscaping

Chapter 19: Electrical, Lighting & ITS

Overview

This chapter provides asset management-driven design guidelines for NTTA electrical systems, roadway illumination and Intelligent Transportation Systems (ITS). Specific details can be found in the NTTA Roadway Electrical System Manual located in the Appendix of this manual. These guidelines include essential design criteria such as materials, location, workmanship, identification, accessibility and layouts. In addition, key concepts are discussed such as electric service center (ESC) attributes, circuitry, load calculations and allowance for future growth, equipment location and panel designs. It is of critical importance that redundancy be considered for illumination and ITS systems. Additionally, it is imperative that all illumination and ITS systems be located and designed in a manner which is favorable in location and protection with respect to safety, accessibility, and maintainability. These guidelines should be supplemented by sound engineering judgment.

1. Avoid and minimize the use of lighting except where necessary to improve user safety

2. Design lighting systems to avoid direct views from adjacent residential properties and other sensitive receptors

3. To extent practical, specify consistent lighting standards (poles), mountings, fixtures and lamps for all segments and phases of the roadway corridor

4. Locate lighting poles along outside roadway shoulders to improve maintenance accessibility and minimize lane closures

5. Ensure ground junction boxes reference the NTTA as the owner per NTTA standard drawings and related manuals

6. Ensure all high mast illumination poles (HMIP) have base sleeves per NTTA standard drawings

Chapter 20: Facilities

Overview

This chapter provides asset management-driven design guidelines for NTTA facilities. All federal, state and local requirements must be met in addition to addressing each guideline provided in this chapter. Key concepts include: HVAC, layouts, aesthetics, accessibility, sizing, sustainability, and environmental elements. Designers, whether developing plans for new facilities or remodeling existing facilities, should address specific environmental impacts inherent to the design, construction, operations and management of a facility as identified by the Leadership in Energy and Environmental Design (LEED) methodology. Following LEED's criteria will provide high performance facilities that have less of an impact on the environment. The application of all relevant guidelines in this manual and should be employed along with the latest edition of the NTTA SWDG. These guidelines should be supplemented by sound engineering judgment.

1. Accessible location of fire alarm panel and compliance with all fire department requirements

2. Accessible location of facility management system (FMS) computer

3. Finishes for ceilings, walls and floors that are aesthetically pleasing, maintenance-free and easily repairable

4. HVAC
   - Ensure supply and return grills are located in every room
   - Ensure maintainability is considered in determining its location
   - Ensure it is integrated into FMS system; remote monitoring and operation and all alarm reporting

5. Ensure all data center areas have separate and redundant HVAC systems from the building HVAC system

6. Ensure buildings and site around the buildings are completely ADA compliant

7. Require long-term warranties be issued

8. Ensure all facilities have roof access from the inside

9. Designs to reduce heat/cold infiltration

10. Include interior sprinkler systems

11. Include adequate number of parking spaces including handicap parking spaces (per ADA requirements)

12. Ensure mechanical yard shaded from afternoon sun

13. Ensure adequate quantity and location of plumbing cleanouts

14. Break room sinks shall contain waste disposals

15. Ensure adequate quantity and location of electrical outlets and switches. At a minimum, follow NEC guidelines for locating devices for residential buildings

16. Electrical conductors to be type THHN/THWN rated stranded copper size #10 AWG and larger

17. Ensure buildings are zoned with water shut-off valves

18. Ensure FMS system is BACnet compliant

19. Lighting
    - Must meet the latest energy-efficiency standards
    - Ensure motion sensors are on lights in all rooms and offices
    - Must be adequate for security monitoring
    - Utilize LED technology where feasible

20. Ensure designs will eliminate pigeon roosting locations

21. Ensure back-up generator is of the size and type per maintenance requirements. Ensure warranty period for generator is per Maintenance Department recommendations, typically a five-year warranty.

22. Buildings not utilizing a back-up generator shall have provisions for accepting a generator supply located on the exterior of the building. The connection point shall utilize Posi-Lok cam connections, (Crouse-Hinds or compatible), be weatherproof, lockable and in close proximity to the building's main distribution switchgear or main distribution panel.

23. Electrical equipment shall be labeled as to Arc Flash potential per OSHA standards by the electrical contractor or by the person responsible for stamping the electrical plan.

24. All material and finishes should meet standards for sustainability where possible

25. Use material, finishes, and construction to LEED (Leadership in Energy and Environmental Design) design guidelines as much as possible for future considerations

26. Ensure floor coverings are low maintenance and high durability (e.g. equal to or greater than Stonehard flooring products)

27. Ensure all facilities have proper security measures

28. Use adequate wall protection where applicable

29. Ensure electrical systems are designed to meet current and projected loads, or a minimum 25% additional load; whichever is greater

30. Ensure administrative buildings have back-up generators with redundant emergency lighting

31. Ensure mechanical room is properly sized, compatible layout with regards to equipment, and ideally located with respect to maintenance operations.

32. Restrooms
    - Permanent restroom facilities are required at each location
    - Restroom partitions should be made of a composite material
    - Designed to have minimum hand contact for entering, exiting, flushing, washing and drying

33. Performance standards
    - Durability – durable and cost-effective materials shall be used and have consistent wear, strength and weathering qualities
    - Low maintenance – life-cycle maintenance costs shall be considered in the evaluation of all materials and finishes
    - Quality of appearance – materials shall be appealing and harmonious in appearance and texture
    - Drainage – positive drainage shall be provided at all locations within and around the facility
    - Cleaning – materials that do not soil or stain easily shall be used and shall have surfaces that are easily cleaned in a single operation.
    - Nonslip – entrances, stairways, and areas around equipment shall have high nonslip properties
    - Corrosion resistance – non-corrosive metals shall be utilized
    - Compatibility – selected materials shall be compatible with the Dallas area climate
    - Availability – selection of materials shall permit competitive bidding and emphasize regional products and processes over those not available locally
    - Graffiti resistant products shall be used to protect surfaces susceptible to graffiti; designer shall coordinate with NTTA on which surfaces require protection

Chapter 21: Miscellaneous

Overview

This chapter provides asset management-driven design guidelines for miscellaneous items that are regarded as important components to the maintainability of NTTA facilities. It is recommended that the designer reference other chapters within this set of guidelines when applicable for further clarification and/or use. These guidelines should be supplemented by sound engineering judgment.

1. Riprap is required for:
   - All vertical concrete foundations/structures
   - All ground boxes
   - All sign foundations
   - All grate/area inlets
   - All ITS poles and equipment
   - All illumination structures/poles
   - Areas with less than an eight-foot clear distance between obstructions
   - Areas between abutments and raised medians for future u-turn lanes (see latest NTTA standard sheet)
   - Designer should evaluate the need for toe walls

2. Concrete coatings
   - Ensure compliance with the latest edition of the NTTA SWDG
   - Required on fascia of exterior concrete bridge beams
   - Required on all steel beams unless they are weathered steel

3. Fences
   - Ensure ROW fence is per latest NTTA standard sheet
   - Ensure no horizontal supports are located within clear zone of traffic; angled supports are permitted
   - Install fence outside of clear zone when possible
   - Ensure compliance with the latest edition of the NTTA SWDG

4. Weigh-in-Motion (WIM) Systems
   - Will be installed on each new corridor
   - Location must meet geometry requirements (e.g. vertical & horizontal alignment of the roadway)
   - Location must meet installation requirements (e.g. power and communication lines)
   - Verification of type of data to be collected (e.g. vehicle weight data, load enforcement, toll rate justification, etc.) will determine type of WIM system to be installed

Chapter 22: Asset Data Collection

Overview

This chapter provides guidelines to assist with maintaining and protecting NTTA's assets. Hansen Information System (Hansen), a database system, was selected to support this endeavor by tracking assets such as roadways, structures, lighting, signing, and buildings on NTTA's facilities. These guidelines will assist in the effort of trying to address maintenance issues during the project development phases. For example, by assigning Hansen naming convention to roadway lighting during the design phase this will eliminate the costly field verification of "as-built" data collected upon project completion by maintenance personnel.

1. Hansen
   - All roadway lights will carry a Hansen ID designation prior to completion
   - Roadway lights and circuit naming will be assigned by the Hansen consultant and shown on drawings prior to completion
   - All roadway signs will carry a Hansen ID designation prior to completion
   - Data properly collected and input per latest and applicable general notes and specifications
   - Must be input in a timely manner per specification for NTTA's Asset Management Program
   - Asset data must be submitted to NTTA one month prior to substantial completion

2. GIS
   - Electronic files will be checked for proper application of the CAD standards; special focus will be placed on level assignments
   - Electronic files will be check for proper geographic projection

Glossary

ADA – Americans with Disabilities Act

Asset Management Methodology – spending the right amount of money at the right time with a focus on total project cost

BACnet – Building Automation and Control Network

FMS – Facility Management System

GASB 34 – Governmental Accounting Standards Board issued Statement No.34 which includes requirements for capital asset reporting in financial statements

HVAC – Heating, Ventilation, and Air Conditioning Systems

ITS – Intelligent Transportation System

LEED – Leadership in Energy and Environmental Design

Life-cycle cost – the total cost of ownership of a structure or system over its useful life

Maintenance Easement – a right to use another person's property for a specific purpose, in this case accessing NTTA facilities for the purpose of maintaining their assets

Mechanically Stabilized Earth (MSE) walls – employs metallic reinforcement (strips or wire grid) that is connected to a precast concrete facing panel to create a reinforced soil mass. The reinforcement is placed in horizontal layers between successive layers of compacted specified material

Mow strips – concrete used to eliminate mowing operations adjacent to structures (i.e. retaining walls) or under railing (e.g. MBGF)

NTTA – North Texas Tollway Authority

NTTA's Asset Management Program (Hansen Database) – a database system used by NTTA for tracking all roadway, structures, lighting, signing, and building assets on their facilities

NTTA System – Tollway consisting of the Dallas North Tollway (DNT), President George Bush Turnpike (PGBT), Addison Airport Toll Tunnel (AATT) and Mountain Creek Lake Bridge (MCLB)

Positive Protection – a means of physically separating the work space from the traveling public; most common examples are portable concrete traffic barriers and protective vehicles for moving operations

Ramp gores – an area on the ramp where a non-traversable road surface hinders road users from crossing from a ramp to the through lanes or vice versa

Right-of-Way – is the entire width of land between the public boundaries or property lines of a highway

Right-of-Way Line – a legally established line that indicates the boundary between the highway facility and adjacent property owner's holdings

THHN – Thermoplastic High Heat Resistant Nylon Coated conductor insulation used in commercial and industrial installations

THWN – Thermoplastic Heat and Water Resistant Nylon Coated conductor insulation used in commercial and industrial installations

VQAM – Visual Quality Assurance Manager

Appendix A

NTTA
NORTH TEXAS TOLLWAY AUTHORITY

Updated: September 2008

NORTH TEXAS TOLLWAY AUTHORITY

NTTA CRASH ATTENUATOR GUIDELINES

DESIGN CONSIDERATION

Crash Attenuator	Product Name	Price[1]	Test Level Criteria[2]	Attenuator Length[3]	Backup Width[3]	Attenuator Height[3]	TxDOT Standard[4]	Reusability Rate[2]	Application
REACT 350 - Narrow	REACT350.4-B	$22,800	45 mph	15'-3"	-	4'-3.5"	REACT (N) - 05	90-100%	- Frequent impact areas - Critical decision points - Limited sight distance
	REACT350.4-S	$21,000		13'-9"	30" - 36"				
	REACT350.6-B	$26,600	55 mph	21'-3"	-				
	REACT350.6-S	$24,800		19'-9"	30" - 36"				
	REACT350.9-B	$29,700	65 mph	30'-3"	-				
	REACT350.9-S	$27,900		28'-9"	30" - 36"				
	REACT350.9HS-B	$33,800	70 mph	30'-3"	-				
	REACT350.9HS-S	$32,000		28'-9"	30" - 36"				
REACT 350 - Wide[5]	60” DW with Concrete Backup	$35,900	TL-3	30' 7"	60"	46"	REACT (W) - 03	90-100%	
	96” DW with Concrete Backup	$41,800		34' 9"	96"				
	120” DW with Concrete Backup	$47,500		33' 10"	120"				
	60” DW with Concrete Backup	$31,200	TL-2	30' 7"	60"				
	96” DW with Concrete Backup	$34,400		34' 9"	120"				
TRACC - Narrow	FASTRACC	$11,500	70 mph	26'	24"	2'-8"	TRACC (N) - 05	98%	- Occasional impact areas - Standard gores - Adequate site distance
	TRACC	$9,800	TL-3	21'					
	SHORTRACC	$6,500	TL-2	14'					
TRACC - Wide[6]	FASTRACC	$19,200	70 mph	26'	71"	2'-8"	TRACC (W) - 05	98%	
	WIDETRACC	$15,200	TL-3	21'	58"				
	SHORTRACC	$8,100	TL-2	14'	39"				

NORTH TEXAS TOLLWAY AUTHORITY

NTTA CRASH ATTENUATOR GUIDELINES

DESIGN CONSIDERATION

Crash Attenuator	Product Name	Price[1]	Test Level Criteria[2]	Attenuator Length[3]	Backup Width[3]	Attenuator Height[3]	TxDOT Standard[4]	Reusability Rate[2]	Application
TAU II - Narrow	4 Bay	$10,300	TL-2	12'	30", 36"	2'-8"	TAU-II (N) - 05	99%	- Frequent impact areas -Critical decision points - Adequate sight distance
	5 Bay	$11,800	50 mph	15'					
	7 Bay	$14,900	55 mph	20'-6"					
	8 Bay	$16,400	TL-3	23'-6"					
	9 Bay	$17,900	65 mph	26'					
	11 Bay	$20,800	70 mph	32'					
	12 Bay	$22,300	75 mph	35'					
TAU II - Wide	4 Bay	$12,600	TL-2	14'	30" - 102"	2'-8"	TAU-II (W) - 05	99%	
	5 Bay	$14,700	50 mph	16'					
	7 Bay	$18,900	55 mph	22'					
	8 Bay	$20,900	TL-3	25'					
	10 Bay	$23,000	70 mph	32'					

Notes:
1. Prices listed are per unit, provided by the manufacturer and are subject to change. The Design Engineer should verify the current unit prices.
2. Reusability data and test level criteria is provided by the manufacturer. Per the NCHRP 350 report, TL-2 denotes a crash rating up to 43mph while TL-3 denotes a crash rating up to 62mph.
3. Refer to Design Data Table provided on the TxDOT Standards for selecting appropriate system based on site condition and/or design speed.
4. Use current TxDOT Standard Drawings.
5. Steel backup for wide REACT systems are available and costs an additional $1,800 per unit.
6. The wide TRACC units may be expanded to varying widths. The units and prices listed are for the standard sizes shown. Note: For every 7" of width added, the length of the unit increases by 28".

NORTH TEXAS TOLLWAY AUTHORITY

NTTA CRASH ATTENUATOR GUIDELINES

MAINTENANCE CONSIDERATION

Crash Attenuator	Maintenance (if not impacted)	Maintenance after Impact	Repair Cost per Design Impact[1]	Repair Parts Delivery Time
REACT (all)	Periodically check to ensure that the plastic cylinders are in well-functioning condition; occasionally check for debris that may be present beneath the attenuator.	The plastic cylinders may need to be over-pulled to reach their original condition; sheared bolt(s) and cable may need to be replaced.	$350	2-3 days
TRACC (all)	Periodically check for debris that may be present around the system. Otherwise, no routine maintenance required.	Replace damaged or missing parts as necessary.	$500-$1000	1-2 days
TAU-II (all)	Periodically check to ensure that the energy absorbing cartridges are in well-functioning condition; occasionally check for debris that may be present beneath the attenuator.	Damaged energy absorbing cartridges may need to be replaced; system may need to be pulled back out to original position	$400	2-3 days

Notes:
1. Prices listed are provided by the manufacturer and are for average repair to each unit assuming a typical, non-severe crash. For severe crashes, it may cost more to repair a unit and it may be necessary to install a new unit.

NORTH TEXAS TOLLWAY AUTHORITY

NTTA CRASH ATTENUATOR GUIDELINES

TRACC

TRACC™ /FASTRACC™/SHORTRACC™/WIDETRACC™

TRACC™

FASTRACC™

SHORTRACC™

WIDETRACC™

REACT

REACT 350, REACT 350 (60”/96”/120”)

REACT 350

REACT 350 (60/96/120)

TAU-II

TAU-II Narrow, TAU-II Wide

TAU-II Narrow

TAU-II Wide

Appendix B

NTTA Maintenance Access Design Details

NTTA
NORTH TEXAS TOLLWAY AUTHORITY

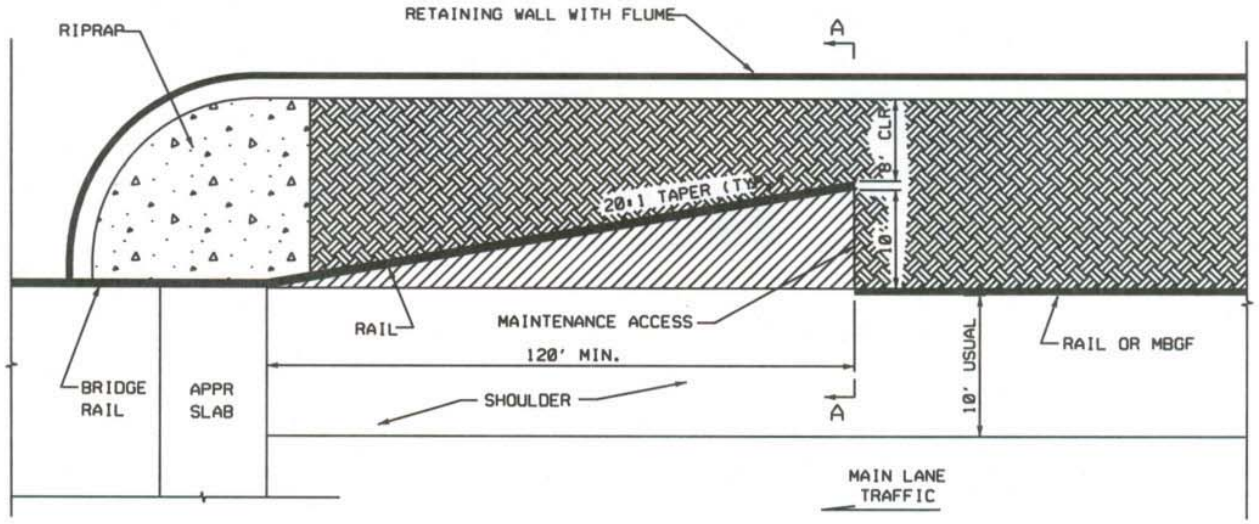

PLAN

5" CONC. RIPRAP

MOWING AREA

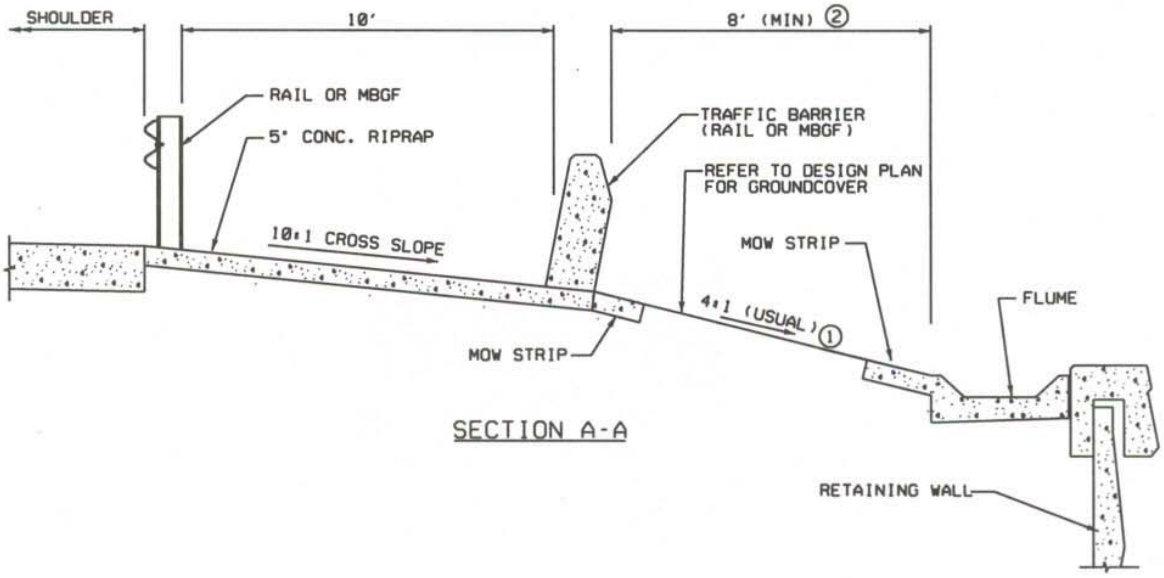

SECTION A-A

① CONCRETE RIPRAP WHEN STEEPER THAN 3:1.

② CONCRETE RIPRAP WHEN LESS THAN 8'.

FIGURE 1: MAINTENANCE ACCESS DETAIL - ROADWAY AT BRIDGE

NTTA NORTH TEXAS TOLLWAY AUTHORITY

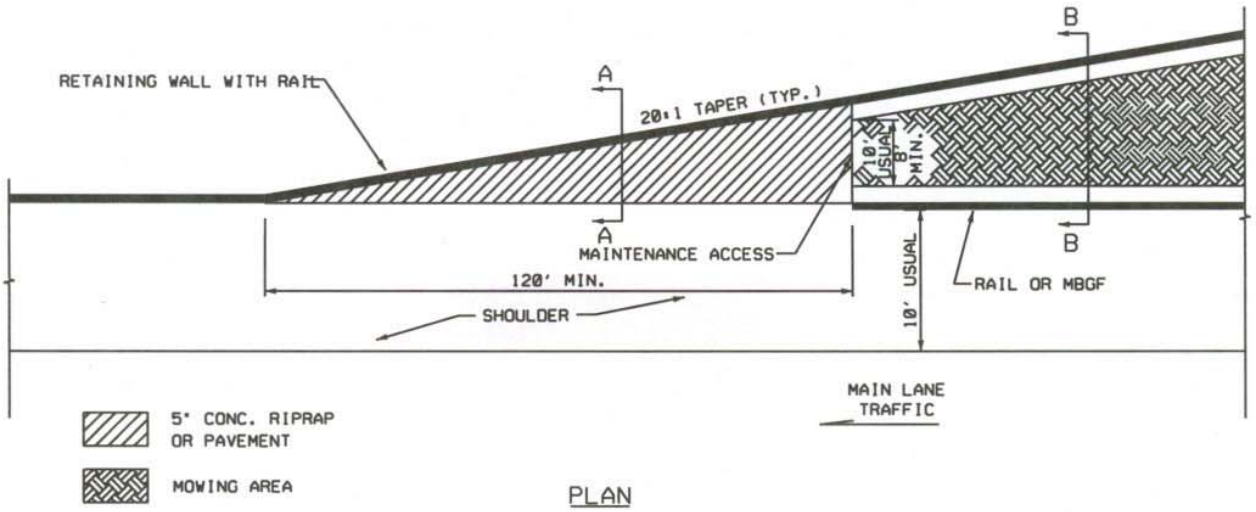

PLAN

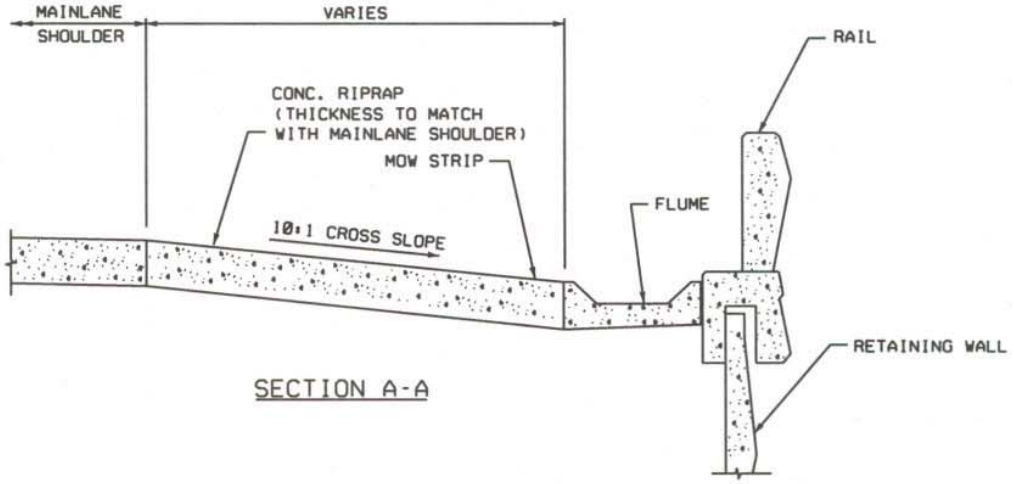

SECTION A-A

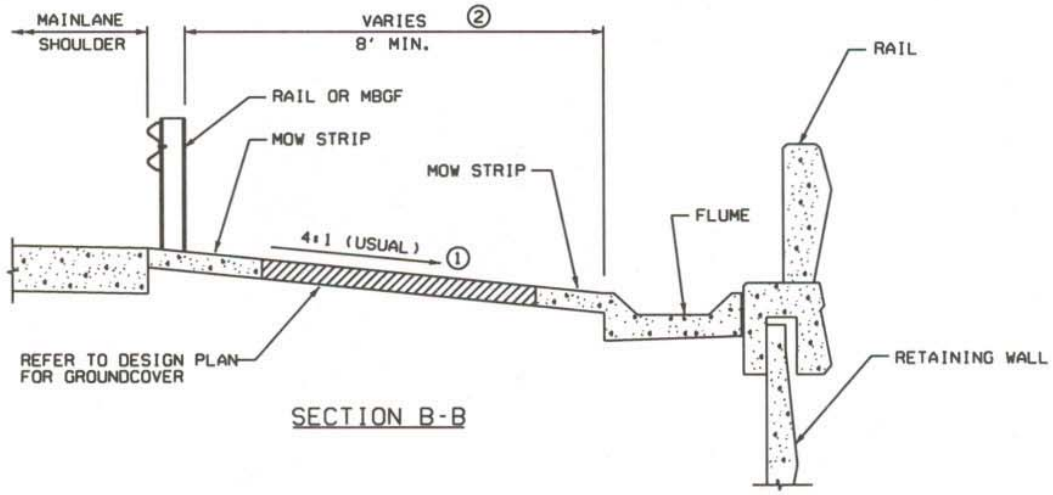

SECTION B-B

① CONCRETE RIPRAP WHEN STEEPER THAN 3:1.

② CONCRETE RIPRAP WHEN LESS THAN 8'.

FIGURE 2: MAINTENANCE ACCESS DETAIL (FILL SECTIONS)

NTTA NORTH TEXAS TOLLWAY AUTHORITY

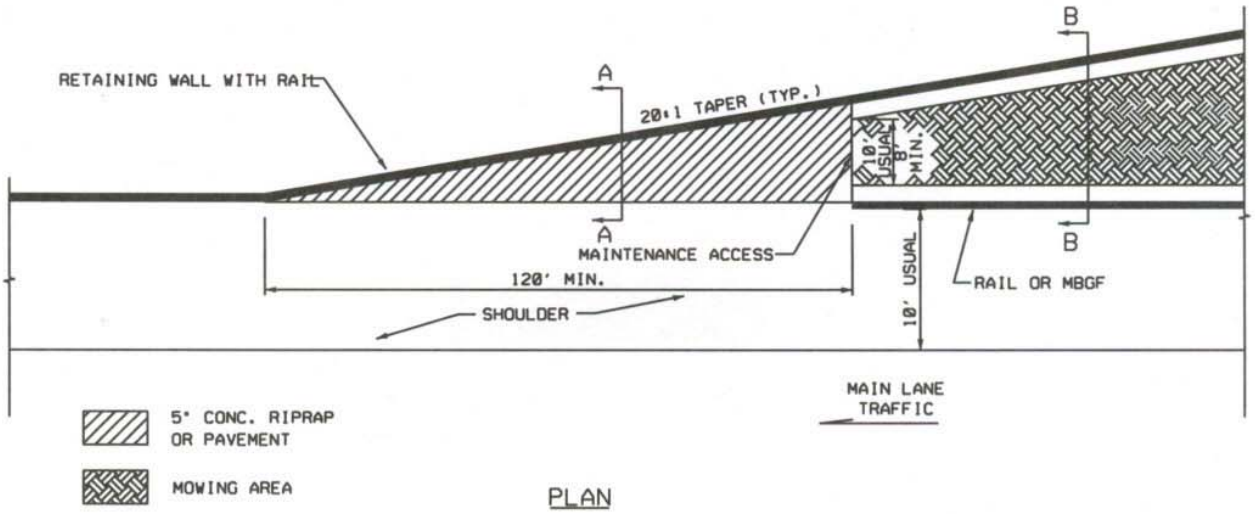

PLAN

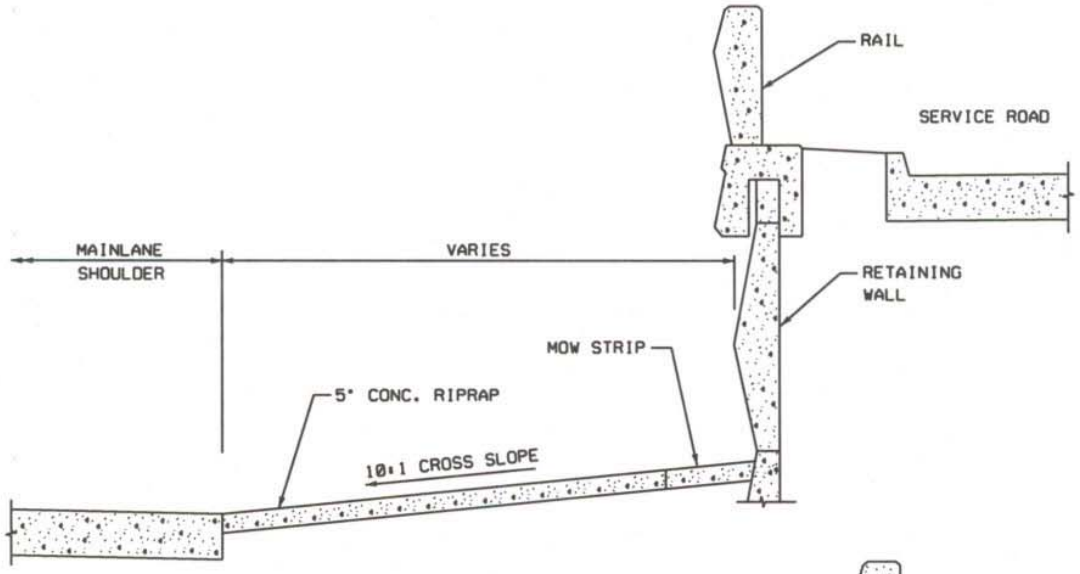

SECTION A-A

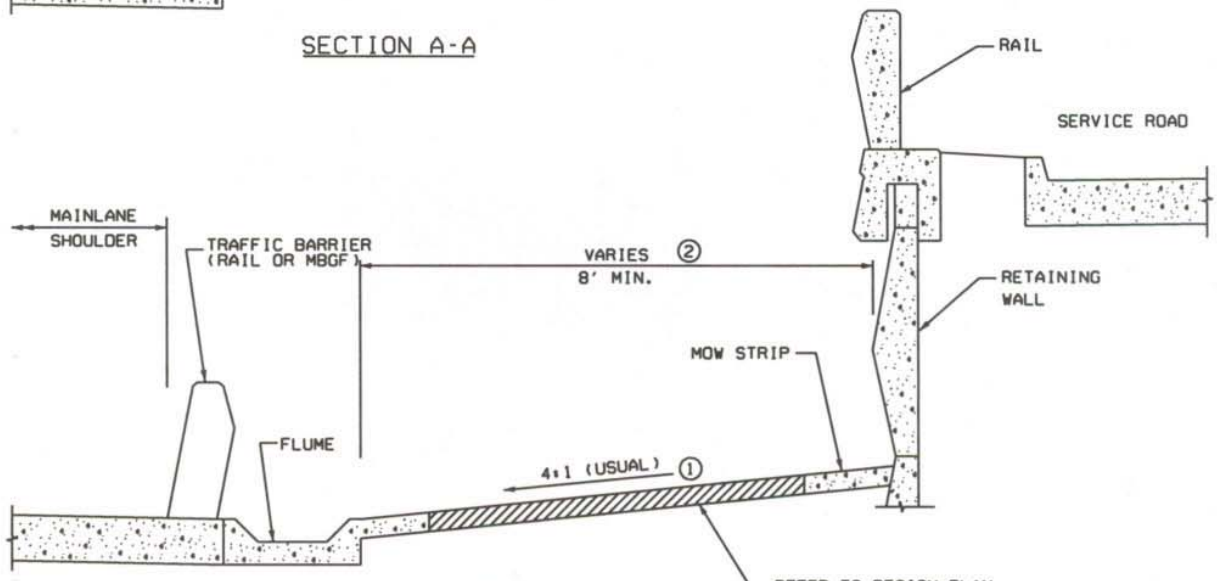

SECTION B-B

① CONCRETE RIPRAP WHEN STEEPER THAN 3:1.

② CONCRETE RIPRAP WHEN LESS THAN 8'.

FIGURE 3: MAINTENANCE ACCESS DETAIL (CUT SECTIONS)

NTTA NORTH TEXAS TOLLWAY AUTHORITY