02057

MEMORANDUM OF UNDERSTANDING

This Memorandum of Understanding (the "**Memorandum**") is entered into effective as of the 20th day of June 2008, by and between DALLAS AREA RAPID TRANSIT ("**DART**"), a Texas regional transportation authority organized and existing pursuant to Chapter 452, Texas Transportation Code (the "**Code**"), whose address is P.O. Box 660163, Dallas, Texas 75266-7210, and the NORTH TEXAS TOLLWAY AUTHORITY (the "**NTTA**"), a Texas regional tollway authority organized and existing pursuant to Chapter 366 of the Code, whose address is P.O. Box 260729, Plano, Texas 75026.

WHEREAS, the NTTA intends to construct and operate the Eastern Extension of the President George Bush Turnpike, an extension from State Highway 78 in Garland, southeastward through the City of Rowlett and connecting with Interstate Highway 30 in Garland (the "**Project**"), a controlled access toll turnpike project, as such term is defined in and permitted by Chapter 366 of the Code, in accordance with the provisions of the Code, to all terms of which reference is hereby made; and

WHEREAS, DART owns or controls certain right-of-way (the "**DART Tract**") located approximately 800 feet south of and parallel to State Highway 66 (Lakeview Parkway) that is depicted on Exhibit "A," attached hereto, and is further depicted on Exhibit "B", incorporated herein by reference, said property being designated by the NTTA as NTTA Parcel No. 30-57RR; and

WHEREAS, the DART Tract is currently utilized for freight railroad operations and certain railroad-related facilities and improvements are located on the DART Tract; and

WHEREAS, DART may in the future construct on the DART Tract a light rail line, a commuter rail line, a Public Transit Bridge (as defined below) and/or any other new railroad or public transit-related improvements (all existing and future improvements constructed by or on behalf of DART are hereby collectively referred to as the "**DART Structures**"). Upon completion of construction by the NTTA, all DART Structures shall be owned by DART, except any features necessary to the safe and efficient operation or structural integrity of the Project, which shall be co-owned by DART and the NTTA; and

WHEREAS, pursuant to Section 366.170(c) of the Code, the NTTA has full easements and rights-of-way through, across, under, and over any property owned by any local governmental entity, as necessary or convenient to construct, acquire, or efficiently operate a turnpike project or system, including all easements necessary for the construction and operation of the Underpass and the Frontage Roads (as those terms are defined below); and

WHEREAS, DART agrees that the NTTA's design, construction, operation, maintenance and repair of the Underpass, the Frontage Roads, and related structures described below, if performed in compliance with the terms and conditions of this Memorandum, are not incompatible with DART's current and anticipated future use of the DART Tract; and

WHEREAS, the NTTA and DART now desire to enter into this Memorandum in order to (1) clarify the rights, entitlements, and property interests of each party with respect to the Project as it relates to the DART Tract, and, (2) prescribe the manner in which the design, construction,

maintenance and repair of the Underpass, the Frontage Roads, the DART-Specified Facilities (as defined below), and the DART Structures shall be performed or conducted; and

WHEREAS, the NTTA and DART are authorized to make this type of agreement pursuant to Chapters 366 and 452 of the Code and Chapter 791 of the Texas Government Code, as amended.

NOW, THEREFORE, in consideration of the mutual promises, covenants and conditions made herein, the NTTA and DART acknowledge and agree as follows:

1. **The NTTA Project.**

   A. **The Underpass.** As part of the Project, the NTTA will construct the controlled access lanes of the Project under DART's existing freight rail tracks (the "**Underpass**") on, under and through the DART Tract in generally a north-south direction, together with the embankments, drainage facilities, columns, footings, and other structures required in connection with the Underpass or the Project.

   B. **Frontage Roads.** As part of the Project, the NTTA will construct, and the Texas Department of Transportation ("**TxDOT**") shall maintain, the frontage roads of the Project (the "**Frontage Roads**") through the DART Tract in generally a north-south direction, together with the embankments, drainage facilities, columns, footings, and other structures required to support each of the Frontage Roads, at the same grade as the Permanent Freight Bridge (as defined below). For each of the Frontage Roads the NTTA shall construct, or shall have DART or the **Operating Railroad** (which is currently the Dallas, Garland & Northeastern Railroad Company) construct, at NTTA's cost, concrete crossing panels, pavement, grading, barricades, street lighting, drainage facilities, signs, pavement markings, active warning devices, approaches, and the bungalow or controller box (collectively, the "**DART-Specified Facilities**") as designated by DART on and through the DART Tract. Within ninety (90) days after execution of this Memorandum, DART shall provide the NTTA with all design specifications for the active warning devices, approaches and the bungalow or controller boxes. To further set forth the obligations of the parties regarding the Frontage Roads, the NTTA and DART agree as follows. First, the NTTA, at its cost, shall replace the existing DART freight railroad track utilizing a new alignment approximately twenty-five feet (25') to the south of its current location (the "Replacement DART Freight Track"); due to the relocation of the existing freight line to this new alignment, it will not be necessary to construct a temporary replacement freight railroad track for continued freight service during construction of the Underpass. DART and the NTTA currently intend that, pursuant to the terms of an existing trackage rights agreement between DART and the Operating Railroad, as supplemented by a separate letter agreement (the "Separate Agreement") to be negotiated between DART and the Operating Railroad, the Operating Railroad shall construct or otherwise provide the DART Specified

Facilities at the NTTA's cost. In that case, the Separate Agreement shall provide the NTTA reasonable review and approval rights regarding all design features of the work undertaken thereunder, as well as prudent provisions to ensure coordination between the contractors retained by the Operating Railroad and the NTTA for their respective work obligations. The NTTA shall reimburse DART, or remit to the Operating Railroad directly, all costs actually incurred by the Operating Railroad under the Separate Agreement after being reviewed and approved by the NTTA.

C. **Permanent Freight Bridge.** As part of the Project, the NTTA will (1) construct the Replacement DART Freight Track to provide freight service upon completion of the Underpass, (2) construct a single track freight bridge with associated freight track and supporting structures, (the "Permanent Freight Bridge") along the alignment of the Replacement DART Freight Track, and (3) remove the existing DART freight track. The transition from the existing DART freight track to the Replacement DART Freight Track shall be sequenced so as not to interfere with freight service. The NTTA's obligation to construct the Replacement DART Freight Track and the Permanent Freight Bridge, and to remove the existing DART freight track, shall not create or be deemed to create any obligation of the NTTA to construct any additional or replacement freight railway tracks.

D. **Public Transportation Accommodations.** The NTTA acknowledges that its construction of the Underpass requires the removal of the existing surface and sub-terrain of the DART Tract upon which DART may construct a future light rail line, commuter rail line and/or other new railroad or public transit-related improvements. Therefore, as part of the Project, the NTTA will, in addition to constructing the Replacement DART Freight Track and the Permanent Freight Bridge, design and construct the Underpass so as to allow for adding a double-track public transit-related bridge (the "**Public Transit Bridge**") across the Project in the future; this includes the NTTA's design and construction of drilled shaft retaining walls that can be converted to suitable abutments to later accommodate the Public Transit Bridge. Additionally, if DART notifies NTTA prior to September 30, 2047, that it elects to extend its public transportation system across the Project and begins construction prior to September 30, 2048, the NTTA shall promptly pay all necessary costs actually incurred by DART in the design and construction of the Public Transit Bridge (except costs DART would have incurred regardless of the construction of the Underpass, such as for ballast, rail, rail ties, signals, signage, gates, and conduit) and necessary abutments. The Public Transit Bridge design shall comply with the then-current version of the NTTA's aesthetic guidelines. IF, HOWEVER, DART does not so notify NTTA prior to September 30, 2047, then the obligation of the NTTA to fund the Public Transit Bridge will terminate unless extended by written agreement of the parties.

2. **The NTTA Rights.** DART acknowledges and agrees that by virtue of Sec. 366.170 of the Code, the NTTA has and is hereby granted full easements and rights-of-way

through, across, under and over the DART Tract as are necessary or convenient to construct, acquire, or efficiently operate the Project, including the Underpass and the Frontage Roads. Included within the NTTA's easements and rights-of-way is the right of reasonable access to the Underpass over and across the DART Tract for the purposes of construction, inspection, repair, and maintenance thereof. The NTTA's right to the continued use of the DART Tract for purposes of operating and maintaining the Project, together with such aerial, surface and subsurface portions of the DART Tract as are necessary or convenient for embankments, drainage facilities, columns, footings, and other structures to support and maintain the Underpass (all such items and all similar items being hereinafter called the **"Underpass Supporting Structures"**) and any similar underpass as may be reconstructed on the DART Tract in the future is expressly subject to the terms of this Memorandum. Notwithstanding the foregoing, this Memorandum authorizes the construction of the Underpass, the Underpass Supporting Structures, the Replacement DART Freight Track, the DART-Specified Facilities, the Permanent Freight Bridge and the Frontage Roads only in accordance with the NTTA Plans (as hereinafter defined), which provide for the placement of any embankments, drainage facilities, columns, footings or similar structures within or on the DART Tract.

3. NTTA Construction, Use, and Maintenance of the Underpass.

A. Notice of Construction or Maintenance. The NTTA acknowledges that DART allows ongoing freight operations on the DART Tract by the Operating Railroad and, potentially in the future, by DART, its successors or assigns. If the NTTA constructs or reconstructs the Underpass or the Frontage Roads or performs other construction, inspection, maintenance or major repair activities with respect to the Underpass, the Frontage Roads, or the Underpass Supporting Structures, the NTTA shall provide DART and the Operating Railroad with reasonable notice of its intent to perform any such activities if those activities will affect any equipment or facilities comprising the DART Structures or will affect the use or operation of the DART Structures or the DART Tract. For routine inspection and/or maintenance activities on, under, over or adjacent to the DART Tract, "reasonable notice" shall mean written notice to DART and the Operating Railroad describing the extent and nature of such activities at least fifteen (15) calendar days before commencement of such activities. For construction and major repair activities that either involve more than a nominal use of the DART Tract or that substantially affect DART's or the Operating Railroad's operations of the DART Structures or use or operation of the DART Tract, the NTTA shall provide DART and the Operating Railroad with as much prior written notice as possible, but in any event, no less than ninety (90) days' prior written notice of the construction and/or major repair activity. Notwithstanding the foregoing, (1) this Memorandum serves as adequate and timely notice of the NTTA's initial construction of the Underpass, the Underpass Supporting Structures, and the Frontage Roads, and (2) if emergency repairs to the Underpass, the Underpass Supporting Structures, or the Frontage Roads, or if a petroleum, chemical, or other hazardous material spill or discharge results from the use of the Underpass, the Underpass Supporting Structures, or the Frontage Roads that requires an emergency response, and, if DART's or the Operating Railroad's

use or operation of the DART Structures or the DART Tract are affected by such repairs or the repair activities or such emergency response, the NTTA shall contact DART as soon as the need for the repair or response is apparent and DART and the NTTA shall cooperate so that the repairs can be made or the response can be undertaken in a manner that causes as little disruption or damage as possible to DART's or the Operating Railroad's ongoing use or operation of the DART Structures or the DART Tract.

B. **Plan Review.** Before the NTTA constructs or reconstructs the Underpass, the Underpass Supporting Structures or the Frontage Roads, the NTTA will provide DART and the Operating Railroad with an opportunity to review and comment on the NTTA's design (preliminary, 60% and 90% of completed, and final) and its construction plans and specifications for the Underpass, the Underpass Supporting Structures, the Frontage Roads, and the DART-Specified Facilities, and will provide DART and the Operating Railroad with copies of such plans and specifications (collectively, the **"NTTA Plans"**). The NTTA Plans shall contain all such design safeguards as are reasonably necessary to protect the DART Tract and the DART Structures thereon from damage during construction and thereafter by the NTTA's activity on, over, under, or near the DART Tract. DART shall provide the NTTA with copies of all applicable commuter or light rail transit safety standards, all current and applicable federal and state railroad safety laws, rules, regulations and orders and Operating Railroad safety rules and policies regarding activities within railroad rights-of-way (collectively, the **"Railroad Safety Laws"**). Notwithstanding DART's review of the NTTA Plans, the NTTA shall be and remain fully responsible and liable for all features of the NTTA Plans, including, without limitation, for the compliance of the NTTA Plans with the Railroad Safety Laws.

C. **Non-Interference.** The NTTA and its contractors shall conduct all of their activities and operations on, over, under and across the DART Tract, whether in connection with the operation and use of the Underpass, the Frontage Roads, or otherwise, including, but not limited to, construction, inspection, maintenance or repair activities of the Underpass, the Underpass Supporting Structures, and the Frontage Roads in such a manner so as not to endanger, interfere with, or impede DART's or the Operating Railroad's operations or its use and maintenance of the DART Structures or the DART Tract, and the NTTA and its contractors shall make reasonable efforts not to interfere with or impede DART's or the Operating Railroad's operations on and maintenance of the DART Tract. The NTTA shall immediately suspend activities on the DART Tract that violate the terms of this Memorandum upon notification from DART that said activities impair the safe and efficient operation of the DART Structures or DART's or the Operating Railroad's use of the DART Tract for transit or freight railroad purposes. The NTTA and its contractors shall comply with safety requirements designed to protect the DART Tract and DART's or the Operating Railroad's operations during the aforementioned activities, including all applicable Railroad Safety Laws . The

NTTA shall reimburse DART and the Operating Railroad all costs associated with furnishing a flagman during the NTTA's actual construction activities for the Underpass which affect the Operating Railroad's operations. On days when no such activities occur, no reimbursement for flagmen shall be required of the NTTA.

4. **The NTTA and the NTTA Contractor Insurance.** Before any NTTA contractor begins work on, over, under or near the DART Tract, the NTTA shall require the contractor to furnish evidence of the following:

A. General Liability Insurance that shall provide a combined single limit of not less than $2,000,000 per occurrence and in the aggregate for bodily injury and/or property damage arising out of construction activities on under or near the DART Tract.

B. Business Automobile Liability coverage, covering any automobile used in connection with the work performed under this Memorandum, which shall provide a combined single limit of not less than $500,000 for bodily injury to any one person and $1,000,000 per occurrence and $500,000 for property damage per occurrence.

C. Railroad Protective Liability that shall provide limits not less than $2,000,000 per occurrence and $6,000,000 in the aggregate for bodily injury and/or property damage resulting from the NTTA's or its contractor's activities. The foregoing insurance shall include DART, its successors and assigns, and the Operating Railroad as additional insureds and shall contain a "cross liability" endorsement which shall cause the insurance to apply as though separate policies were written for the contractor, the Operating Railroad and DART.

D. Workers' Compensation Insurance providing benefits comparable to those provided under the Workers' Compensation Act of the State of Texas and/or any other State or Federal law or laws applicable to the NTTA's contractor's employees performing work under this contract. Employer's Liability Insurance with limits of liability of not less than $500,000 each accident, $500,000 each employee for disease and $500,000 policy limit for disease. This insurance must be endorsed with a Waiver of Subrogation Endorsement, waiving the carrier's right of recovery under subrogation or otherwise from DART and the Operating Railroad.

E. The herein-described insurance shall protect DART (and the other additional insureds) from liability arising out of the Underpass construction, inspection, maintenance or repair activities of the NTTA, its contractors, agents, and employees on the DART Tract, whether caused or contributed to by an act or omission of DART, or its agents or employees.

F. The NTTA shall cause the contractor to furnish DART with a certificate of insurance, reasonably acceptable to DART, certifying that all required

insurance is in effect before the work begins and continues in full force and effect until the work is completed. The certificate of insurance shall expressly state that the insurance cannot be cancelled, or amounts reduced, unless DART, acting by and through its designated officer or manager, is given thirty (30) days prior written notice thereof.

G. DART shall also require the NTTA or its contractor to execute and deliver DART's "Standard Construction Agreement and Contractor's Right of Entry", shown as Exhibit "C", prior to the NTTA's or its contractor's commencement of work on the DART Tract, including, without limitation, the obligation to provide flagmen at no cost to DART or the Operating Railroad as limited by the concluding sentence of subsection 3.C. above.

5. **The DART Rights.** By the statutory power and consistent with the authority granted to it under Chapter 452 of the Code, DART has the right to construct, reconstruct, inspect, repair, maintain and use the DART Tract for both its freight operations and transit purposes, subject to the NTTA's easement interests and other rights described in Section 1 and elsewhere in this Memorandum.

6. **DART Construction, Use and Maintenance of the DART Structures.**

A. **Obligation to Operate and Maintain.** DART shall be responsible for operating and maintaining, at its sole cost, the DART Structures, including the Permanent Freight Bridge, the Public Transit Bridge, and the DART-Specified Facilities, and complying with the Railroad Safety Laws relating thereto.

B. **Notice of Construction or Maintenance.** Before DART or its contractors perform any construction, reconstruction, or major repair activities with respect to any DART Structures or the DART Tract that could affect any portion of the Underpass, the Frontage Roads, the Underpass Supporting Structures, or the NTTA's use of the Underpass or the Frontage Roads, DART shall provide the NTTA with reasonable notice of DART's intent to perform any such activities. For DART routine inspection and/or maintenance activities on, under, over or adjacent to the DART Tract, "reasonable notice" shall mean written notice to the NTTA describing the extent and nature of such activities at least fifteen (15) calendar days before commencement of such activities. For construction and major repair activities that either involve more than a nominal use of the DART Tract or that substantially affect the Underpass, the Frontage Roads, the Underpass Supporting Structures, or the NTTA's use of the Underpass or the Frontage Roads, DART shall endeavor to provide the NTTA with as much prior written notice as possible, but in any event, no less than ninety (90) days' prior written notice of the construction and/or major repair activity. Notwithstanding the above, if emergency repairs to the DART Structures are necessary, or if a petroleum, chemical, or other hazardous material spill or discharge results from the use of the DART Structures that requires an emergency response, and if the Underpass, the Underpass Supporting Structures, the Frontage Roads, or the NTTA's use of

the Underpass or the Frontage Roads is affected by such repairs or the repair activities or such emergency response, DART shall contact the NTTA as soon as the need for the repair or response is apparent and DART and the NTTA shall cooperate so that the repairs can be made or the response can be undertaken in a manner that causes as little disruption or damage as possible to the Underpass, the Frontage Roads, the Underpass Supporting Structures, or the NTTA's use of the Underpass or the Frontage Roads.

C. **Plan Review.** DART agrees that, prior to DART's or the Operating Railroad's construction of any DART Structures on the DART Tract, and, further, prior to DART or its contractors performing any construction activity within five (5) feet of the Underpass, the Underpass Supporting Structures or the Frontage Roads, DART shall provide the NTTA with a reasonable opportunity to review and comment on DART's design (preliminary and final) and construction plans and specifications and will provide the NTTA with copies of such final plans and specifications (collectively, the "**DART Plans**"). The DART Plans shall contain all such design safeguards as are reasonably necessary to protect the Underpass, the Underpass Supporting Structures and the Frontage Roads from damage during construction and thereafter by DART and from DART's or the Operating Railroad's use of and activities conducted on the DART Tract. The NTTA shall provide DART with copies of all current and applicable NTTA, federal, and state highway safety laws, rules, regulations and orders and policies regarding activities within roadway rights-of-way (collectively, the "**Highway Safety Standards**"). Notwithstanding the NTTA's review of the DART Plans, DART shall be and remain fully responsible and liable for all features of the DART Plans, including, without limitation, for compliance of the DART Plans with the Highway Safety Standards.

D. **Non-Interference.** DART will conduct all of its activities and operations on the DART Tract, whether in connection with the DART Structures or otherwise, including, but not limited to, construction, inspection, maintenance or repair activities, in such a manner so not to endanger, interfere with, or impede the operations and maintenance of the Underpass, the Underpass Supporting Structures, the Frontage Roads or any other of the NTTA property in and around the DART Tract. DART shall provide the NTTA with reasonable notice of its intent to perform any such activities (other than normal day-to-day operations of the DART Structures) within five (5) feet of any portion of the Underpass. DART and its contractors shall comply with reasonable safety requirements designed to protect the Underpass, the Underpass Supporting Structures, and the Frontage Roads during the aforementioned activities, including all Highway Safety Standards. DART shall immediately suspend activities on the DART Tract that violate the terms of this Memorandum upon notification from the NTTA that said activities impair the safe and efficient operation of the Project. DART or its contractors will not allow to be parked or stored on or in the vicinity of the Underpass' columns any explosive, corrosive, or flammable loads or materials.

7. **DART and DART Contractor Insurance.** Before any contractor acting on behalf of DART begins any work near the Underpass or the Frontage Roads, DART shall require any contractor DART retains (and use all reasonable efforts to cause any contractor the Operating Railroad retains) to obtain (A) General Liability Insurance which shall provide a combined single limit of not less than $2,000,000 for bodily injury and/or property damage resulting from any one occurrence; (B) Business Automobile Liability coverage, covering any automobile used in connection with work on the DART Tract, which shall provide a combined single limit of not less than $500,000 for bodily injury to any one person and $1,000,000 per occurrence and $500,000 for property damage per occurrence; and (C) Workers' Compensation Insurance providing benefits comparable to those provided under the Workers' Compensation Act of the State of Texas and/or any other State or Federal law or laws applicable to DART's contractor's employees performing work under this contract and Employer's Liability Insurance with limits of liability of not less than $500,000 each accident, $500,000 each employee for disease and $500,000 policy limit for disease. The foregoing Commercial Liability and Business Automobile Liability insurance shall include the NTTA and its successors and assigns as additional insureds and shall contain a "cross liability" endorsement which shall cause the insurance to apply as though separate policies were written for both the contractor and the NTTA. The foregoing Workers' Compensation insurance must be endorsed with a Waiver of Subrogation Endorsement, waiving the carrier's right of recovery under subrogation or otherwise from the NTTA. The insurance shall protect the NTTA from liability arising out of the construction activities on the DART Tract. DART shall cause its contractor to furnish the NTTA with certificate of insurance as evidence that all of said insurance is in effect when the construction work is begun and continues in effect until the work is completed. The certificate of insurance shall expressly state that the insurance cannot be cancelled, or amounts reduced, unless the NTTA's Director of Operations is given thirty (30) days prior written notice thereof.

8. **Minimum Clearance Levels.** With respect to the DART Tract, DART agrees not to construct any DART Structures in a manner that will cause the NTTA to violate minimum clearance levels as may be established by applicable state or federal regulations. The NTTA agrees that in the event that it reconstructs the Underpass following the construction of DART Structures, it will consult with DART as to the proposed height of the Underpass under the DART Tract, and, at a minimum, it will not construct the Underpass at any height higher than its current heights crossing the DART Tract.

9. **Liability.** Without hereby waiving any governmental immunity generally available to any signatory party to this Memorandum under Texas law with respect to any third parties, each signatory party to this Memorandum is and shall be responsible for its own acts and deeds and for those of its contractors, agents or employees as related to that parties' respective activities in and around, across or under the Underpass, the Frontage Roads, the Underpass Supporting Structures and the DART Tract and for the breach of its contractual obligations under this Memorandum. This Memorandum is solely for the benefit of the parties hereto and their successors and assigns. Nothing contained in this Memorandum is intended to, nor shall be deemed or construed to create or confer any rights, remedies, or causes of action in any person or entities that are not parties to this Memorandum or their successors or assigns. Nothing stated herein shall limit the right of DART or the NTTA to assert any governmental immunity defense to any claim of such other signatory party or entity or to any claim of any third party.

10. No Joint Enterprise. The parties do not intend that this Memorandum be construed as finding that the parties have formed a joint enterprise. The purposes for which each party has entered into this Memorandum are separate and distinct. It is not the intent of any of the parties that a joint enterprise relationship is being entered into and the parties hereto specifically disclaim such relationship.

This Memorandum does not constitute a joint enterprise, as there are no pecuniary interests, no common purpose and no equal right of control among the parties hereto.

11. Notices. All notices or other communication required or permitted hereunder shall be presumed given when hand-delivered, or three (3) business days after being mailed by certified mail, return receipt requested, addressed as follows:

If intended for DART, to:

Dallas Area Rapid Transit
P.O. Box 660163
Dallas, Texas 75266-7210
Attn: Vice President - Commuter Rail
& Railroad Management

If intended for the NTTA, to:

North Texas Tollway Authority
P.O. Box 260729
Plano, Texas 75026
Attn: Executive Director

If intended for the Operating Railroad, to:

Dallas, Garland & Northeastern Railroad
Company
403 International Parkway, Suite 500
Richardson, Texas 75081
Attn: General Manager

Notwithstanding the foregoing, each signatory party shall notify the other signatory party within 24 hours of the reporting signatory party's first notice of any accident or other event on or adjacent to the DART Tract that results in, or might result in, injury to the person or property of any person or entity, including injury or damage to the DART Tract, the Underpass, the Underpass Supporting Structures, or the Frontage Roads, or may endanger the health or well-being of persons using or in close proximity to the DART Tract, the Underpass, the Underpass Supporting Structures, or the Frontage Roads. Each signatory party may change its address for notices and communications hereunder by providing notice pursuant to this section. DART shall provide the NTTA with each change of address for the Operating Railroad.

12. Miscellaneous.

A. This Memorandum embodies the entire agreement between the parties and there are no oral or written agreements between the parties, or any representations made, which are not expressly set forth herein. This

Memorandum may be amended only by written instrument executed by the parties hereto.

B. This Memorandum shall bind DART and the NTTA, and their successors and assigns.

C. No provision of this Memorandum shall be construed against or interpreted to the disadvantage of any party by any court or other governmental or judicial authority by reason of such party having or being deemed to have drafted, prepared, structured or dictated such provision.

EXECUTED this, the 20th day of June, 2008, by DART, acting through its duly authorized officials; and by the NTTA, acting through its duly authorized officials.

DALLAS AREA RAPID TRANSIT

By: _____
Gary C. Thomas
President/Executive Director

APPROVED AS TO FORM:

By: _____
Hyattye O. Simmons
General Counsel

NORTH TEXAS TOLLWAY AUTHORITY

By: _____
Jorge Figueredo, Ph.D.
Executive Director

ATTEST:

_____
~~Debra L. Smith~~, Secretary
Ruby Franklin,

APPROVED AS TO FORM:

Locke Lord Bissell & Liddell LLP,
General Counsel to the NTTA

By: _____
Frank E. Stevenson, II

EXHIBIT "A"

THE DART TRACT
[NTTA Parcel No. 30-57RR]

(5 pages of 11x17 Engineering Drawings)

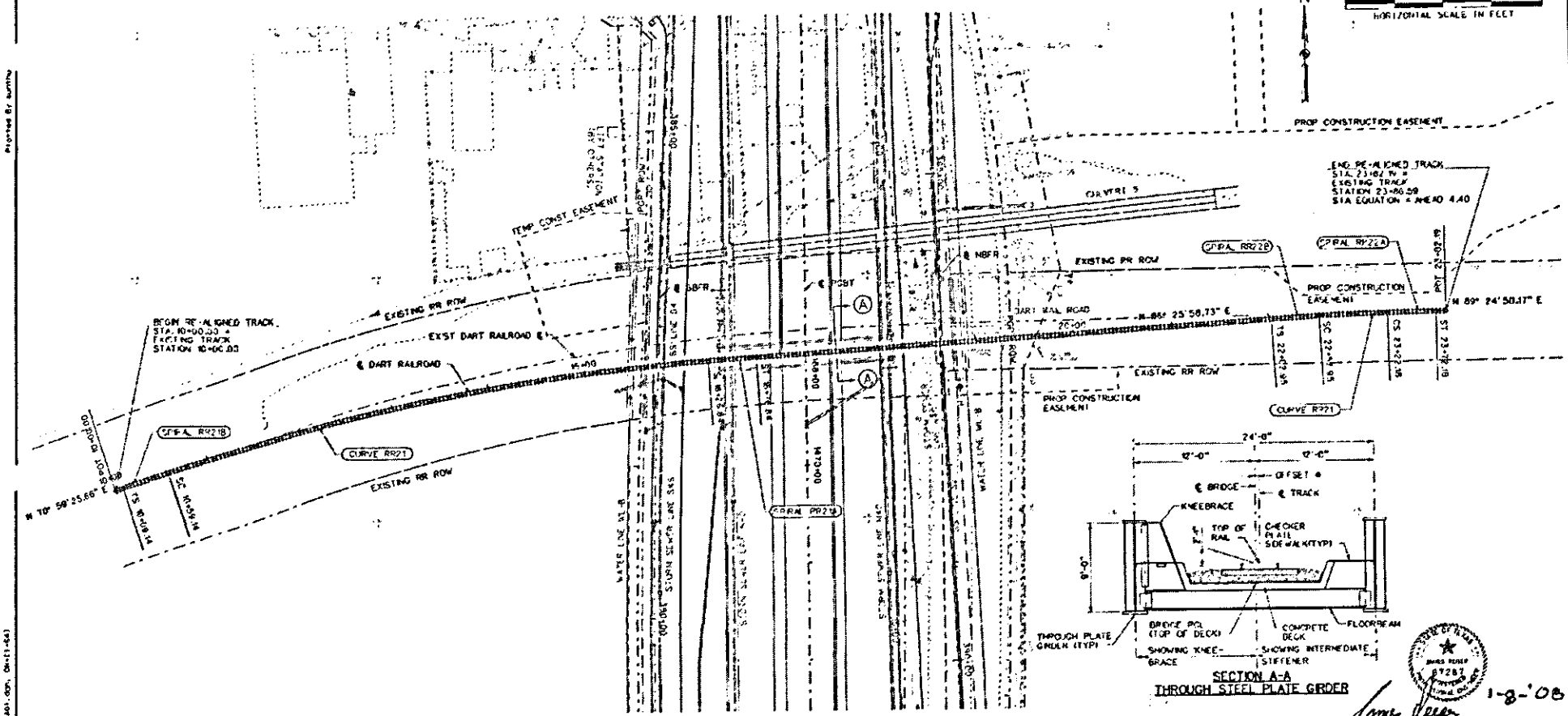

CURVE RR21

PI STATION	=13+44.45
N	= 7,018,890.90
E	= 2,565,052.83
DELTA	= 14° 11' 33.07" (RT)
TANGENT	= 235.31
DEGREE OF CURVE	= 2° 30' 00.00"
LENGTH	= 467.70
RADIUS	= 2,291.83
PC STATION	= 10+59.14
PT STATION	= 15+26.84

SPIRAL RR22B

ANGLE	= 0° 37' 30"
LS	= 50.00
R	= 2291.83
YS	= 0.18
XS	= 50
P	= 0.05
K	= 25.00
LT	= 33.33
ST	= 16.67
LC	= 50.00
BK N 70° 59' 26" E	
AH N 71° 36' 56" E	
DEFL	= 0° 12' 30"
DEG	= 2° 30' 00"

SPIRAL RR21A

ANGLE	= 0° 37' 30"
LS	= 50.00
R	= 2291.83
YS	= 0.18
XS	= 50
P	= 0.05
K	= 25.00
LT	= 33.33
ST	= 16.67
LC	= 50.00
BK N 85° 48' 29" E	
AH N 86° 25' 58" E	
DEFL	= 0° 12' 30"
DEG	= 2° 30' 00"

CURVE RR22

PI STATION	=22+87.57
N	= 7,018,952.49
E	= 2,565,996.84
DELTA	= 1° 43' 51.44" (RT)
TANGENT	= 34.62
DEGREE OF CURVE	= 2° 30' 00.00"
LENGTH	= 69.24
RADIUS	= 2,291.83
PC STATION	= 22+52.95
PT STATION	= 23+22.18

SPIRAL RR22B

ANGLE	= 0° 37' 30"
LS	= 50.00
R	= 2291.83
YS	= 0.18
XS	= 50.00
P	= 0.05
K	= 25.00
LT	= 33.33
ST	= 16.67
LC	= 50.00
BK N 85° 25' 58" E	
AH N 87° 03' 29" E	
DEFL	= 0° 12' 30"
DEG	= 2° 30' 00"

SPIRAL RR22A

ANGLE	= 0° 37' 30"
LS	= 50.00
R	= 2291.83
YS	= 0.18
XS	= 50.00
P	= 0.05
K	= 25.00
LT	= 33.33
ST	= 16.67
LC	= 50.00
BK N 88° 47' 20" E	
AH N 89° 24' 50" E	
DEFL	= 0° 12' 30"
DEG	= 2° 30' 00"

PRESIDENT GEORGE BUSH TURNPIKE

NTTA
NORTH TEXAS TOLLWAY AUTHORITY

EXHIBIT A

DART RAILROAD PLAN

SECTION XXX

CONTRACT NO. 0201-PG8-06-CN-EN SHEET

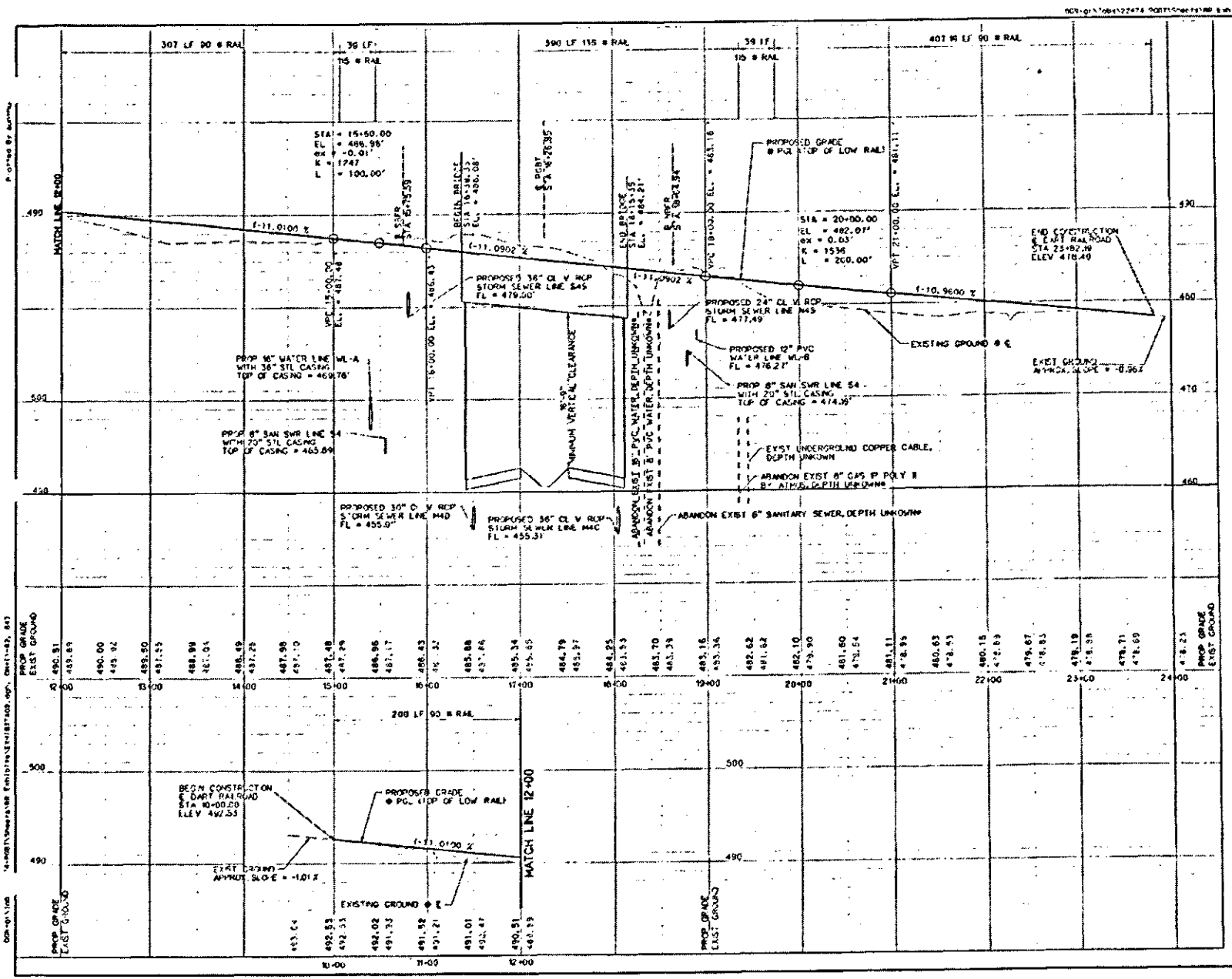
HORIZONTAL SCALE IN FEET
VERTICAL SCALE IN FEET
307 LF 90 # RAIL
39 LF 115 # RAIL
390 LF 115 # RAIL
39 LF 115 # RAIL
407 LF 90 # RAIL
MATCH LINE 12+00
STA = 15+50.00
EL = 486.96'
ex = -0.01'
K = 1747
L = 100.00'
BEGIN BRIDGE
END BRIDGE
PROPOSED GRADE @ PGL (TOP OF LOW RAIL)
STA = 20+00.00
EL = 482.07'
ex = 0.03'
K = 1536
L = 200.00'
END CONSTRUCTION @ DART RAILROAD
STA 25+82.19
ELEV 478.49
(-11.0100 %)
(-11.0902 %)
(-10.9600 %)
PROPOSED 36" CL V RCP STORM SEWER LINE S45 FL = 479.00'
PROPOSED 24" CL V RCP STORM SEWER LINE N45 FL = 477.49
PROPOSED 12" PVC WATER LINE WL-B FL = 476.27'
EXISTING GROUND @ ℄
EXIST GROUND APPROX. SLOPE = -0.96%
PROP 16" WATER LINE WL-A WITH 36" STL CASING TOP OF CASING = 469.76'
PROP 8" SAN SWR LINE S4 WITH 20" STL CASING TOP OF CASING = 465.89
PROP 8" SAN SWR LINE S4 WITH 20" STL CASING TOP OF CASING = 474.39'
MINIMUM VERTICAL CLEARANCE
EXIST UNDERGROUND COPPER CABLE, DEPTH UNKOWN
ABANDON EXIST 8" GAS IP POLY II 8" ATMOS, DEPTH UNKOWN
PROPOSED 36" CL V RCP STORM SEWER LINE M4D FL = 455.0'
PROPOSED 36" CL V RCP STORM SEWER LINE M4C FL = 455.31
ABANDON EXIST 6" SANITARY SEWER, DEPTH UNKOWN
200 LF 90 # RAIL
BEGIN CONSTRUCTION @ DART RAILROAD
STA 10+00.00
ELEV 497.53
PROPOSED GRADE @ PGL (TOP OF LOW RAIL)
(-11.0100 %)
EXIST GROUND APPROX. SLOPE = -1.01 %
EXISTING GROUND @ ℄
MATCH LINE 12+00
PROP GRADE
EXIST GROUND
PRESIDENT GEORGE BUSH TURNPIKE
NTTA
NORTH TEXAS TOLLWAY AUTHORITY
EXHIBIT A
DART RAILROAD PROFILE
SECTION XXX
CONTRACT NO. 0201-PGB-06-CN-EN SHEET 2

SPIRAL RR21A CURVE DATA

ANGLE	= 0° 37' 30"
LS	= 50.00'
R	= 2191.83'
YS	= 0.18'
XS	= 50.00'
P	= 0.05'
K	= 25.00'
LT	= 33.33'
ST	= 16.67'
LC	= 50.00'
DEF1	= 0° 12' 30"
DEG	= 2° 30' 00"

RR21 CURVE DATA

Δ	= 14° 11' 33"
R	= 2291.83
T	= 285.31
L	= 567.70

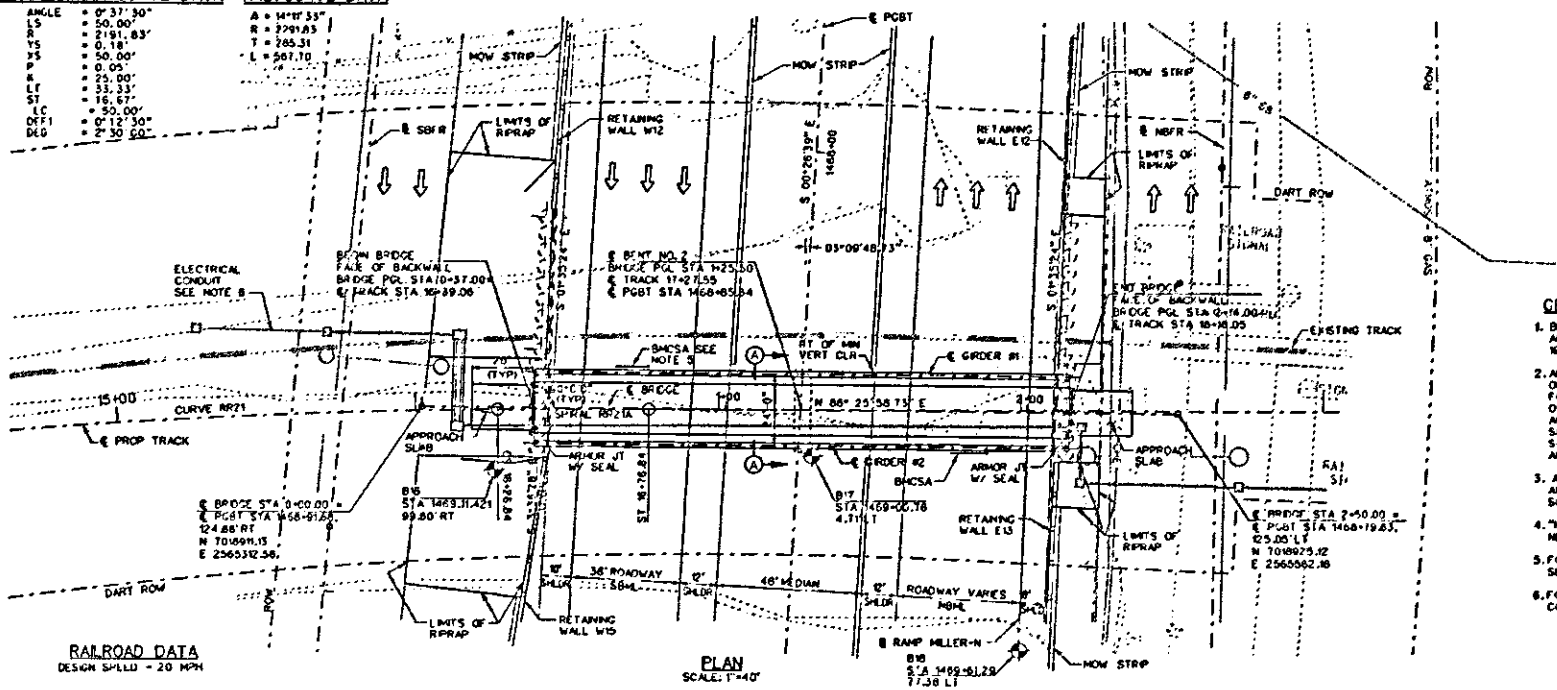

PLAN
SCALE: 1"=40'

RAILROAD DATA
DESIGN SPEED = 20 MPH

GENERAL NOTES

1. BRIDGE DESIGNED FOR COOPER E80 LOADING IN ACCORDANCE WITH THE AREMA SPECIFICATIONS 1996 EDITION.
2. ANY SHORING REQUIRED WITHIN THE INFLUENCE OF THE RAILROAD LIVE LOAD MUST BE DESIGNED FOR COOPER E-80 LOADING IN ADDITION TO ALL OTHER APPLICABLE LOADS IN ACCORDANCE WITH AREMA RECOMMENDATION AND DART GENERAL SHORING REQUIREMENT. ALL SHORING SHALL BE SUBMITTED TO TxDOT & DART FOR REVIEW AND APPROVED PRIOR TO ANY CONSTRUCTION.
3. ALL DIMENSIONS ARE HORIZONTAL OR VERTICAL AND MUST BE CORRECTED FOR GRADE AND SUPERELEVATION WHERE APPROPRIATE.
4. "H" SHOWN IS AT PGL ROUNDED TO THE NEAREST FOOT.
5. FOR BRIDGE MOUNTED CLEARANCE SIGN DETAILS SEE RAILROAD BRIDGE CLEARANCE SIGN ASSEMBLY.
6. FOR ELECTRICAL CONDUIT AND BOXES, SEE CONDUIT LAYOUT SHEET.

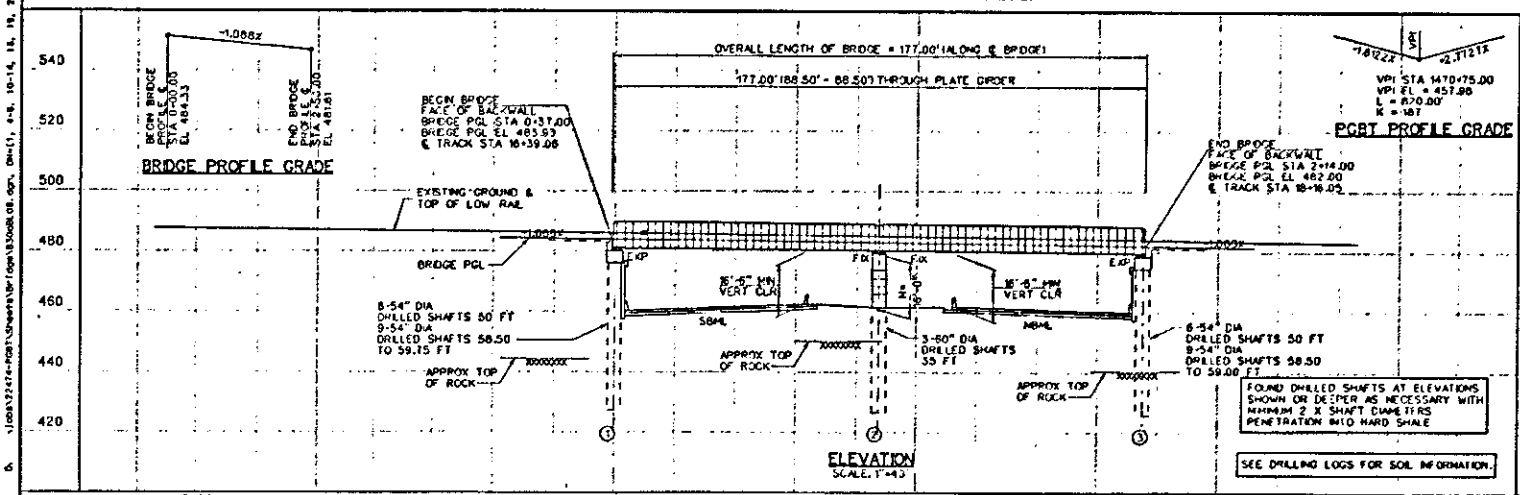

ELEVATION
SCALE: 1"=40'

NBI 18-057-0-2964-06-477

1-3-08

PRESIDENT GEORGE BUSH TURNPIKE

NTTA
NORTH TEXAS TOLLWAY AUTHORITY

EXHIBIT A
BRIDGE LAYOUT
DART RAILROAD UNDERPASS
MP 745.9

Parsons Brinckerhoff Quade & Douglas, Inc.

SECTION XXX

CONTRACT NO. 02011-PGB-06-CN-EN SHEET 3

Plotted 03-JAN-2008 19:52

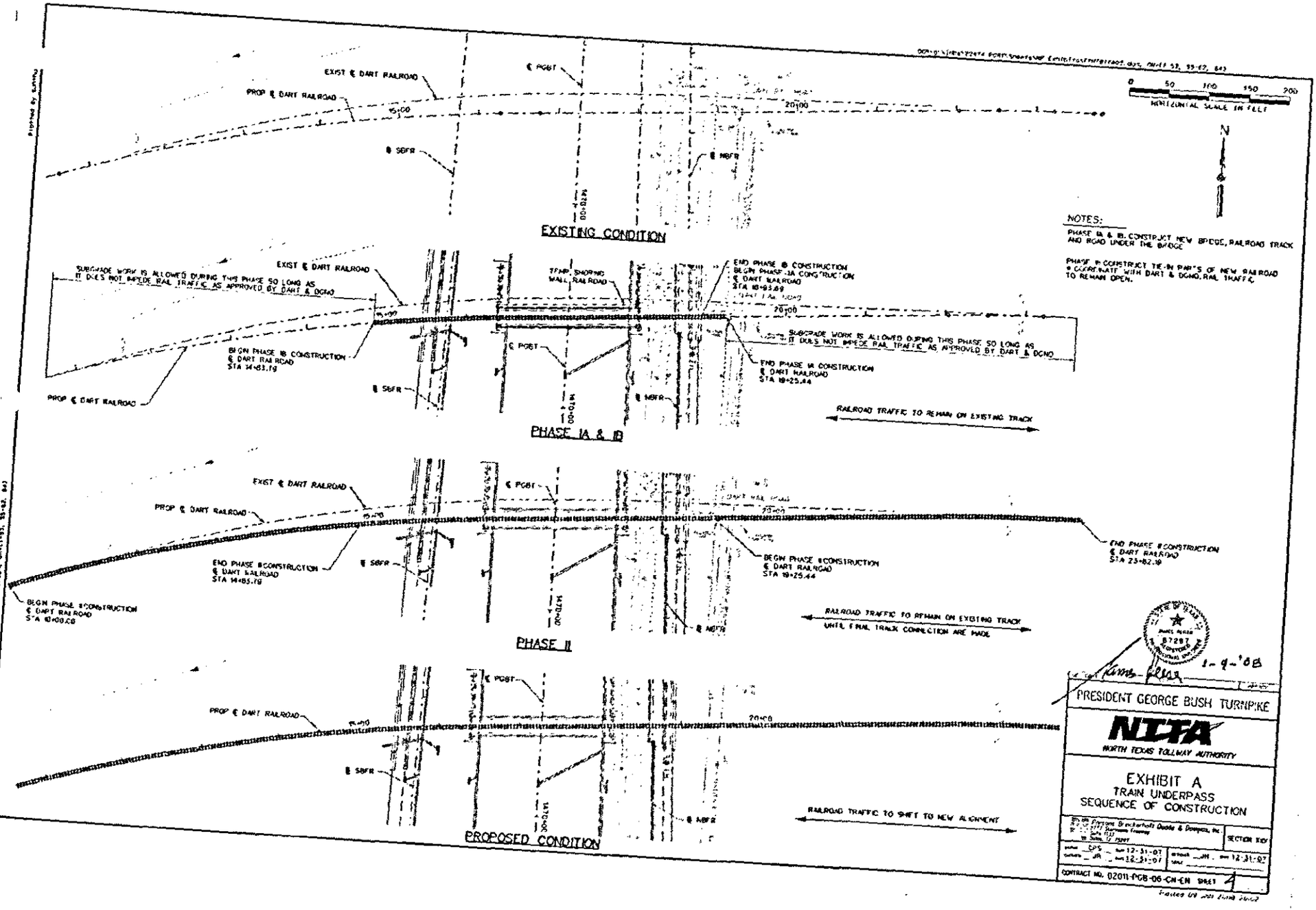
EXIST ℄ DART RAILROAD
PROP ℄ DART RAILROAD
℄ PGBT
℄ SBFR
℄ NBFR
EXISTING CONDITION
SUBGRADE WORK IS ALLOWED DURING THIS PHASE SO LONG AS IT DOES NOT IMPEDE RAIL TRAFFIC AS APPROVED BY DART & DCMO
BEGIN PHASE IB CONSTRUCTION ℄ DART RAILROAD STA 14+83.19
TEMP. SHORING WALL RAILROAD
END PHASE IB CONSTRUCTION BEGIN PHASE IA CONSTRUCTION ℄ DART RAILROAD STA 18+93.89
END PHASE IA CONSTRUCTION ℄ DART RAILROAD STA 19+25.44
RAILROAD TRAFFIC TO REMAIN ON EXISTING TRACK
PHASE IA & IB
END PHASE II CONSTRUCTION ℄ DART RAILROAD STA 14+85.19
BEGIN PHASE II CONSTRUCTION ℄ DART RAILROAD STA 10+00.00
BEGIN PHASE II CONSTRUCTION ℄ DART RAILROAD STA 19+25.44
END PHASE II CONSTRUCTION ℄ DART RAILROAD STA 23+82.19
RAILROAD TRAFFIC TO REMAIN ON EXISTING TRACK UNTIL FINAL TRACK CONNECTION ARE MADE
PHASE II
RAILROAD TRAFFIC TO SHIFT TO NEW ALIGNMENT
PROPOSED CONDITION
NOTES:
PHASE IA & IB CONSTRUCT NEW BRIDGE, RAILROAD TRACK AND ROAD UNDER THE BRIDGE
PHASE II CONSTRUCT TIE-IN PARTS OF NEW RAILROAD & COORDINATE WITH DART & DCMO, RAIL TRAFFIC TO REMAIN OPEN.
HORIZONTAL SCALE IN FEET
0 50 100 150 200
N
PRESIDENT GEORGE BUSH TURNPIKE
NTTA
NORTH TEXAS TOLLWAY AUTHORITY
EXHIBIT A
TRAIN UNDERPASS
SEQUENCE OF CONSTRUCTION
SECTION XIV
CONTRACT NO. 02011-PGB-06-CN-EN SHEET 4

NOTE:

MILE POST DATA SUPPLIED BY DART.

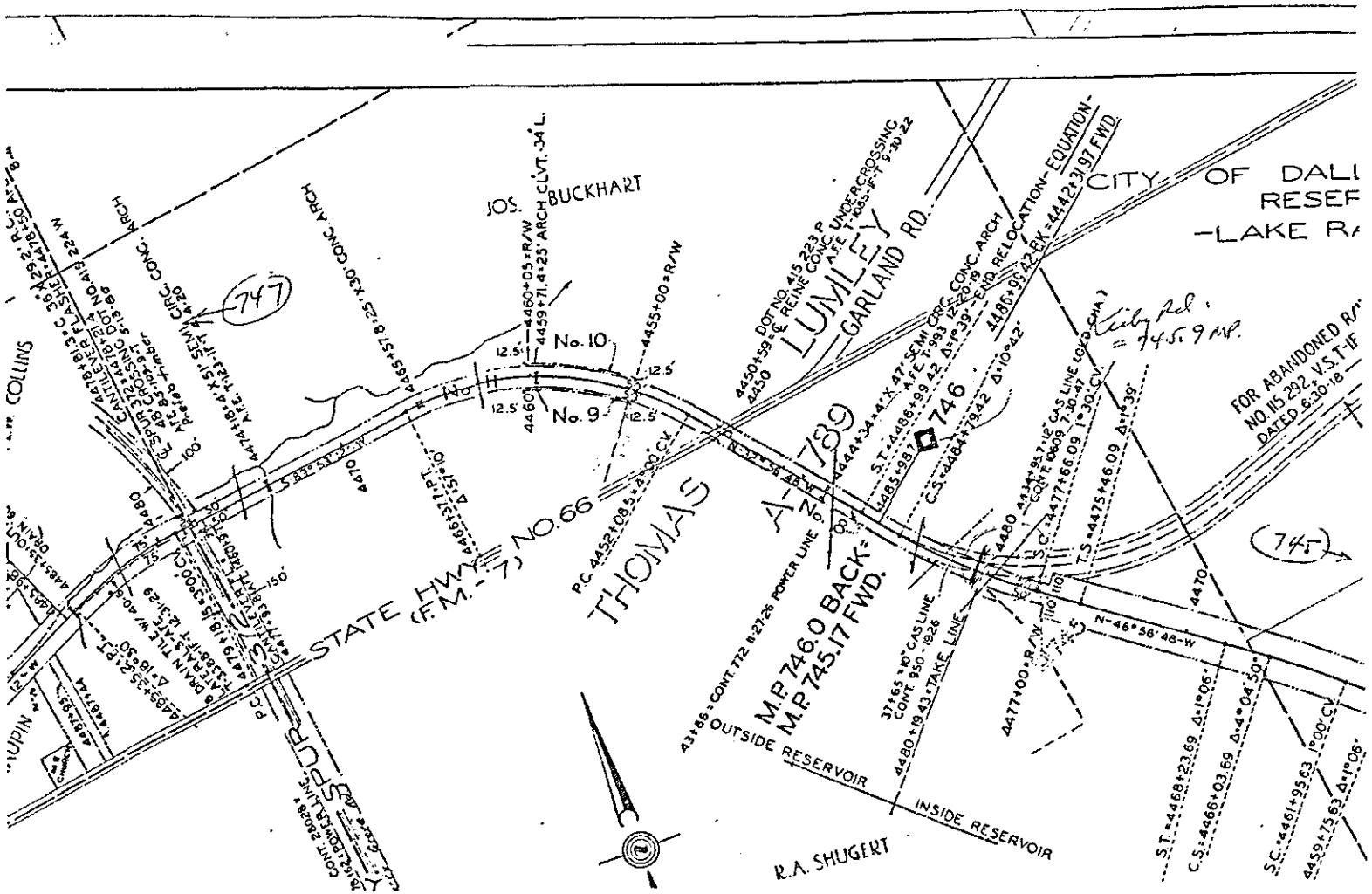

SHEET 1 OF 1

PRESIDENT GEORGE BUSH TURNPIKE

NTTA

NORTH TEXAS TOLLWAY AUTHORITY

EXHIBIT A

MILE POST DATA

SECTION XXX

CONTRACT NO. 02011-PGB-06-CN-EN SHEET 5

EXHIBIT "B"

THE DART TRACT
[NTTA Parcel No.30-57RR]

(135 pages of 11x17 Engineering Drawings dated 4/11/08, incorporated herein by reference, showing final construction drawings of items involved in the construction of the PGBT EE Section 30 which lie within the DART Right-of-Way. These items include, but are not necessarily limited to: paving, earthwork, temporary pavement, stage construction sequence, storm sewers, retaining walls, DART railroad bridge, railroad track work, roadway signage and pavement markings, illumination, water, sanitary sewer, block sod, concrete riprap and conduit for wiring for warning lights.)

Exhibit "C"

AGREEMENT NO. _____

STANDARD CONSTRUCTION AGREEMENT AND CONTRACTOR'S RIGHT OF ENTRY

THIS AGREEMENT ("Agreement") dated _____, 2008, is made by and between DALLAS AREA RAPID TRANSIT ("DART"), a regional transportation authority created and existing pursuant to Chapter 452, Texas Transportation Code, V.A.T.C.S., as amended ("the Act") and _____, hereinafter called "Contractor", whose mailing address is _____.

WITNESSETH:

1. For the period not to extend beyond _____, 2008, DART hereby permits Contractor to enter upon the property of DART on a tract of right of way of the North East Garland Line located near Kirby Road, Mile Post 745.90, in Rowlett, Dallas County, Texas, as may be necessary in connection with installation of the President George Bush Turnpike underpass, together with frontage roads, embankments, drainage facilities, columns, footings and related structures and additionally, one railroad bridge structure together with all appurtances to be performed on DART premises by Contractor under agreement between Contractor and the NORTH TEXAS TOLLWAY AUTHORITY ("NTTA"), a Texas regional tollway authority, (the "Contract"), and for no other purpose. Contractor understands that the Contract and all work to be performed thereunder is subject to the terms and conditions contained in the Memorandum of Understanding ("Memorandum") by and between DART and the NORTH TEXAS TOLLWAY AUTHORITY, which is incorporated herein by reference.

2. As consideration for the right of entry granted herein, Contractor agrees to:

   (a) Perform that portion of the work on DART premises in accordance with plans and specifications as shown in the NTTA Contract 02011-PGB-06-CN-EN, approved by DART and Dallas, Garland and Northeastern Railroad, Inc. (the "Railroad" whether one or more than one, if applicable) in such manner and at such times as shall not endanger or interfere with DART's or Railroad's representatives. Contractor shall submit to DART and Railroad, for approval, all construction details, falsework and other incidentals not detailed in plans, insofar as they affect DART and Railroad.

   (b) Notify DART and Railroad at least fifteen (15) working days before commencing work on DART premises and within five (5) working days after such work is completed. Notification of Railroad shall be by telephone to Greg Hanson, Roadmaster, at 214.240.6100.

   (c) Contact and reimburse Railroad for providing flagmen to protect and control movement of vehicles and equipment of Contractor while upon DART premises.

   (d) Keep all equipment, tools and materials stored at least twenty-five (25) feet from the center line of any operable track. Explosives or other highly inflammable substances or any hazardous materials regulated pursuant to federal or state regulation will not be stored on DART premises without the prior approval of DART's representative.

   (e) Remove all of Contractor's tools, equipment and materials from DART premises promptly upon completion of work, restoring DART premises to the same state and condition as when Contractor entered thereon.

(f) Reimburse DART and Railroad for all costs and expense incurred by DART and/or Railroad in connection with said work, including without limitation the expense of furnishing such inspectors, watchmen and flagmen as DART and Railroad deem necessary, the installation and removal of falsework beneath tracks, and restoration of DART's property to the same condition as when Contractor entered thereon, or to a condition satisfactory to DART's representative.

(g) Remove any lien against DART's property arising from performance of work hereunder by Contractor or any subcontractor.

3. **Contractor agrees to release, defend and indemnify DART and Railroad, from and against all loss, damage, claims, costs, expenses, including attorney's fees, and liability for bodily injury to or death of any persons and loss of or damage to any property and loss of use thereof (including but not limited to employees, subcontractors, agents, invitees and the property of each party hereto) arising out of or in any way connected with the work under said Memorandum upon or adjacent to DART property, whether or not caused or contributed to by the presence or operation of DART or Railroad trains, engines, cars or other equipment, structures or facilities of DART or Railroad or any other party, or by negligence or alleged negligence on the part of DART or Railroad, or any of DART's or Railroad's agents, employees, contractors, subcontractors or invitees. In the event any part of the provisions of this section are determined by any statutory enactment or judicial decision to be void or unenforceable, then this section shall not fail in its entirety but will be enforceable to the extent permitted by law. For the purposes of this section, the term "Railroad" shall include any other railroad company using DART property with DART's consent and any affiliate, subsidiary or lessor of DART.**

4. Prior to start of work or occupancy of premises under this Agreement, Contractor agrees to procure and maintain at its sole cost and expense, the following types and amounts of insurance with an insurer or insurers and form satisfactory to DART:

Comprehensive general and automobile liability insurance with contractual liability endorsement and products and completed operations hazards included, which shall provide coverage for combined single limits of not less than $2,000,000, as further outlined below.

All insurance coverage's required by this Agreement shall provide the following as a minimum standard:

(a) Comprehensive General Liability With Contractual Liability Endorsement.

-Combined single limit of at least $2,000,000.

-DART, Railroad **and all affiliated companies and organizations** are named as additional insureds without any qualifications or restrictions.

-DART must have 30 days notice of cancellation or modification.

(b) Comprehensive Automobile Liability Policy

-Combined single limit of at least $2,000,000.

-DART and Railroad are named as additional insureds without any qualifications or restrictions.

-must have 30 days notice of cancellation or modification.

(c) Workers' Compensation Insurance

-Providing Statutory Benefits under the Workers' Compensation Act of the State of Texas and/or any other State or Federal Law or Laws applicable to the Contractor's employees performing the work under this Agreement.

-Employer's Liability Insurance with limits of liability of not less than $500,000 each accident, $500,000 each employee for disease and $500,000 policy limit for disease.

-Endorsed with a Waiver of Subrogation Endorsement, waiving the carrier's right of recovery under subrogation or otherwise from the Authority.

(d) Contractor agrees to furnish DART Certificates of Insurance (or, as and when DART may direct, copies of the actual insurance policies) as evidence of the coverage's outlined in (a), (b) and (c) above. Approval will be expedited if all required coverage's and the following endorsements are included on the Certificates:

-Endorsement showing DART and its affiliate companies and organizations named as additional insureds. The certificate must specify that the endorsement is applicable to the General Liability and Auto Liability Policies.

-Contractual liability endorsement.

-Endorsement removing exclusions from contractual liability endorsement for operations within 50 feet of a railroad or the purchase of a Railroad Protective Policy with limits of no less than $2,000,000 per occurrence and $6,000,000 aggregate.

-Endorsement removing exclusions for XCU hazards.

-Waiver of subrogation endorsement specific to Workers' Compensation.

5. All policies should contain a cross liability endorsement reading as follows:

"It is agreed that the inclusion of more than one person, corporation, organization, firm or entity as insured under this policy shall not in any way affect the rights of any such person, corporation, organization, firm or entity with respect to any claim, demand, suit or judgment made, brought or recovered by or in favor of any other insured. This policy shall protect each person, corporation, organization, firm or entity in the same manner as though a separate policy had been issued to each; provided that this endorsement shall not operate to increase the company's limits of liability as set forth elsewhere in this policy."

6. The permission herein given shall not be assigned by Contractor without the prior written consent of DART except in the case of subcontractors who shall be deemed agents of Contractor subject to the terms of this Agreement.

7. No vehicular crossing over DART's track shall be installed or used by Contractor without prior written permission of DART.

8. No work shall be done between the hours of 6:00 p.m. and 6:00 a.m., nor on Saturdays, Sundays or legal holidays without prior written permission of DART and Railroad.

9. **At DART's or Railroad's request, Contractor shall remove from DART premises any employee of Contractor or any subcontractor who fails to conform to the instructions of DART's or Railroad's representatives in connection with work on DART premises, and any right of Contractor to enter upon DART premises shall be suspended until such request of DART or Railroad is met. Contractor shall indemnify DART and Railroad against any claim arising from the removal of any such employee from DART premises.**

10. Company-issued photo identification is required of all contractors and subcontractors working on the DART premises.

IN WITNESS WHEREOF, the parties hereto have caused these presents to be executed in duplicate the day and year first above written.

DALLAS AREA RAPID TRANSIT

By _____
WAYNE L. FRIESNER
Vice President
Commuter Rail & Railroad Management

_____
CONTRACTOR

By _____

Printed Name: _____

Title: _____

NORTH TEXAS TOLLWAY AUTHORITY

RESOLUTION NO. 08-153

A RESOLUTION AUTHORIZING A MEMORANDUM OF UNDERSTANDING WITH DALLAS AREA RAPID TRANSIT ("DART") IN CONNECTION WITH THE CONSTRUCTION OF THE EASTERN EXTENSION OF THE PRESIDENT GEORGE BUSH TURNPIKE

May 21, 2008

WHEREAS, the North Texas Tollway Authority (the "NTTA") is a regional tollway authority governed by Chapter 366 of the Texas Transportation Code, known as the "Regional Tollway Authority Act" (the "Act"); and

WHEREAS, pursuant to Section 366.170(c) of the Act, the NTTA has full easements and rights-of-way through, across, under, and over any property owned by any local governmental entity, as necessary or convenient to construct, acquire, or efficiently operate a turnpike project; and

WHEREAS, the NTTA intends to construct the Eastern Extension of the President George Bush Turnpike, a turnpike project as defined in the Act, following the approximate route of old Loop 9, with a northern terminus of SH 78 and a southern terminus of IH 30 in Dallas County (hereinafter the "Eastern Extension"); and

WHEREAS, the NTTA has identified certain public rail facilities operated by Dallas Area Rapid Transit ("DART") on real property owned or controlled by DART (the "DART Tract"), that must be removed or relocated in order to proceed with the design, financing, construction, operation or maintenance of the Eastern Extension;

WHEREAS, DART and the NTTA are authorized under the Interlocal Cooperation Act, Chapter 791 of the Texas Government Code, to contract with one another to perform governmental functions and services under the terms thereof; and

WHEREAS, the NTTA and DART have negotiated a Memorandum of Understanding ("MOU") to: clarify their respective in rights, entitlements, and property interests with respect to the Eastern Extension as it relates to the DART Tract; govern how the relocation of certain existing DART facilities by the NTTA shall be accomplished; and prescribe the manner in which the design, construction, maintenance and repair of, respectively, the Eastern Extension by the NTTA, and current or future rail and other facilities by DART, shall proceed; and

WHEREAS, NTTA staff believes that it is in the best interests of the NTTA to execute the MOU with DART;

NOW, THEREFORE, BE IT RESOLVED that the North Texas Tollway Authority Board of Directors authorizes the Executive Director to execute the MOU with DART authorizing

payment of the amount of $4,500,000.00 for the purposes described above in order to proceed with the design, construction, operation, and/or maintenance of the Eastern Extension, with the costs under the said MOU to be paid from the Feasibility Study Fund.

ATTEST:

Paul N. Wageman, Chairman

Ruby Franklin, Secretary

EXECUTIVE SUMMARY
Dallas Area Rapid Transit Memorandum of Understanding for President George Bush Turnpike Eastern Extension
May 15, 2008

Background/History

NTTA staff and consultants have identified Dallas Area Rapid Transit (DART) facilities that must be relocated for construction and operation of the President George Bush Turnpike Eastern Extension (PGBT EE).

General Overview

- Under its governing statute, the NTTA is required to pay the costs of relocating public facilities affected by an NTTA project. As a result, the NTTA has negotiated a Memorandum of Understanding (MOU) with DART, which was approved at DART's April 22, 2008 Board meeting, for the following relocation costs:
  - Construction of replacement DART freight track, permanent single-track freight bridge, and related track relocation affecting PGBT EE Section 30.
  - Construction of frontage roads for the project through the DART right of way, including embankments, drainage facilities, columns, footings and related structures.
  - Design and construction of the PGBT EE to allow a future dual-track DART passenger rail bridge across the project, including drilled-shaft retaining walls that can be converted to suitable abutments to accommodate a future dual-track passenger rail bridge.
  - If and when DART elects to extend its light rail system across the project, the NTTA shall pay all costs actually incurred by DART for the design and construction of the future passenger rail bridge in compliance with the then-current NTTA aesthetics guidelines. If DART does not begin construction of the future Public Transit Bridge by 2048, the NTTA obligation to fund this bridge will terminate unless extended by written agreement of both parties.
- Execution of the MOU is required to document the costs and other agreements regarding the relocation of the above-referenced DART facilities and prescribe the manner in which future DART and NTTA improvements shall proceed.

Budget/Future Impact

- Costs associated with the MOU are estimated at $4.5 million, including contingencies, and will be paid from the Feasibility Study Fund. This amount does not include the design and construction of the future Public Transit Bridge.
- The NTTA will also reimburse DART and the operating railroad for modification costs to signal-crossing equipment and flagging operations during construction.
- Under the Eastern Extension Project Agreement, TxDOT will provide the NTTA with $160,270,000 in financial assistance for right-of-way acquisition, relocation costs and utility relocation costs that the NTTA incurs for the PGBT EE. Approximately about $400,000 of the MOU fees will be eligible for reimbursement from TxDOT.

Staff Recommendation

Staff recommends that the Executive Director be authorized to execute the MOU with DART as described above.

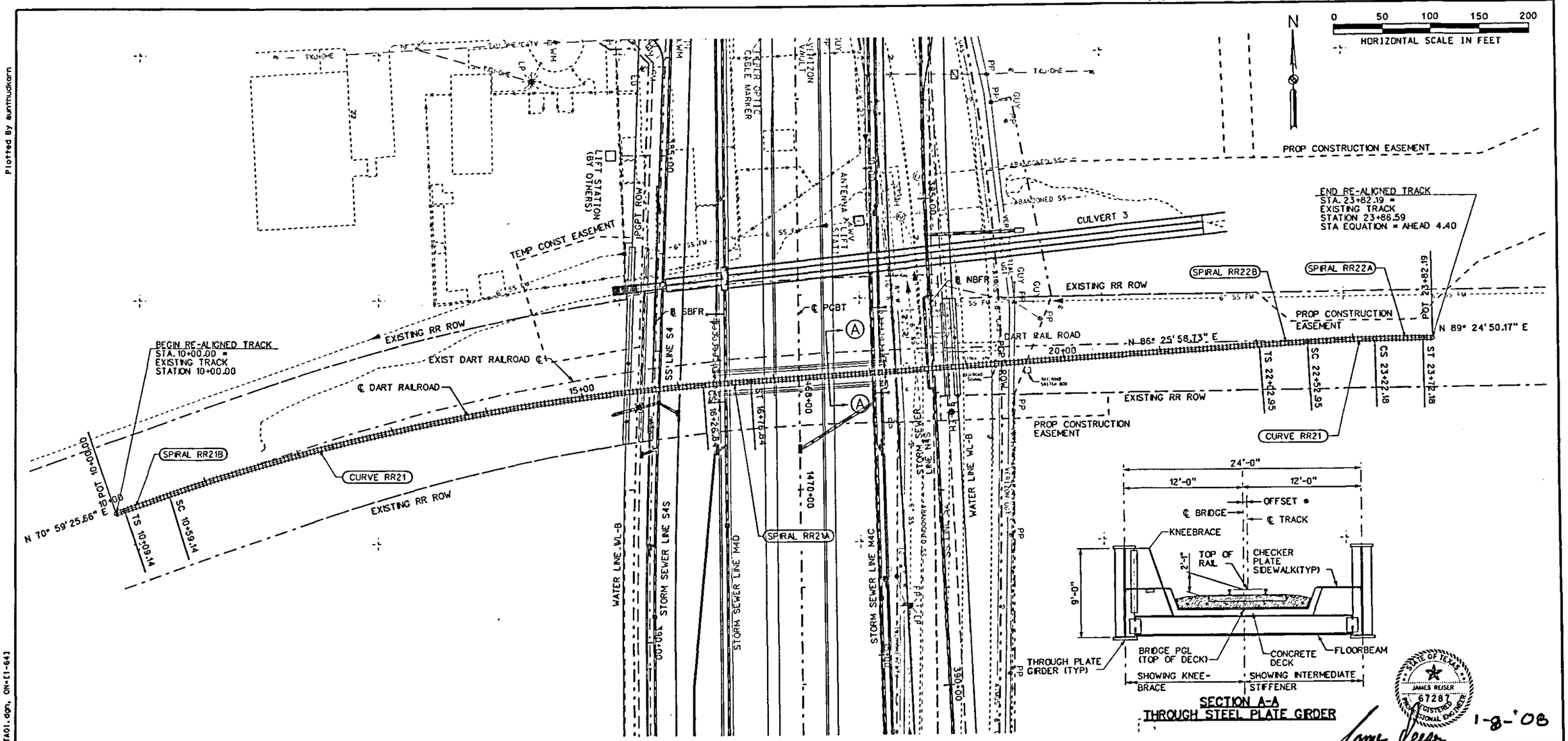

NO.	DATE	REVISION	APPRV.

CURVE RR21

PI STATION	=13+44.45
N	= 7,018,890.90
E	= 2,565,052.83
DELTA	= 14° 11' 33.07" (RT)
TANGENT	= 285.31
DEGREE OF CURVE	= 2° 30' 00.00"
LENGTH	= 567.70
RADIUS	= 2,291.83
PC STATION	= 10+59.14
PT STATION	= 16+26.84

SPIRAL RR21B

ANGLE	= 0° 37' 30"
LS	= 50.00
R	= 2291.83
YS	= 0.18
XS	= 50
P	= 0.05
K	= 25.00
LT	= 33.33
ST	= 16.67
LC	= 50.00
BK	N 70° 59' 26" E
AH	N 71° 36' 56" E
DEF1	= 0° 12' 30"
DEG	= 2° 30' 00"

SPIRAL RR21A

ANGLE	= 0° 37' 30"
LS	= 50.00
R	= 2291.83
YS	= 0.18
XS	= 50
P	= 0.05
K	= 25.00
LT	= 33.33
ST	= 16.67
LC	= 50.00
BK	N 85° 48' 29" E
AH	N 86° 25' 59" E
DEF1	= 0° 12' 30"
DEG	= 2° 30' 00"

CURVE RR22

PI STATION	=22+87.57
N	= 7,018,952.49
E	= 2,565,996.84
DELTA	= 1° 43' 51.44" (RT)
TANGENT	= 34.62
DEGREE OF CURVE	= 2° 30' 00.00"
LENGTH	= 69.24
RADIUS	= 2,291.83
PC STATION	= 22+52.95
PT STATION	= 23+22.18

SPIRAL RR22B

ANGLE	= 0° 37' 30"
LS	= 50.00
R	= 2291.83
YS	= 0.18
XS	= 50.00
P	= 0.05
K	= 25.00
LT	= 33.33
ST	= 16.67
LC	= 50.00
BK	N 85° 25' 59" E
AH	N 87° 03' 29" E
DEF1	= 0° 12' 30
DEG	= 2° 30' 00"

SPIRAL RR22A

ANGLE	= 0° 37' 30"
LS	= 50.00
R	= 2291.83
YS	= 0.18
XS	= 50.00
P	= 0.05
K	= 25.00
LT	= 33.33
ST	= 16.67
LC	= 50.00
BK	N 88° 47' 20" E
AH	N 89° 24' 50" E
DEF1	= 0° 12' 30"
DEG	= 2° 30' 00"

PRESIDENT GEORGE BUSH TURNPIKE

NTTA
NORTH TEXAS TOLLWAY AUTHORITY

EXHIBIT A

DART RAILROAD PLAN

Parsons Brinckerhoff Quade & Douglas, Inc.
2777 Stemmons Freeway
Suite 833
Dallas, TX 75207

SECTION XXX

DRAWN CPS DATE 12-31-07 DESIGNED JR DATE 12-31-07
CHECKED JR DATE 12-31-07 SCALE

CONTRACT NO. 02011-PGB-06-CN-EN SHEET 1

DGN=g:\Jobs\22474-PGBT\Sheets\RR Exhibits\EXHIBITA02.dgn, ON=[1-62, 64]

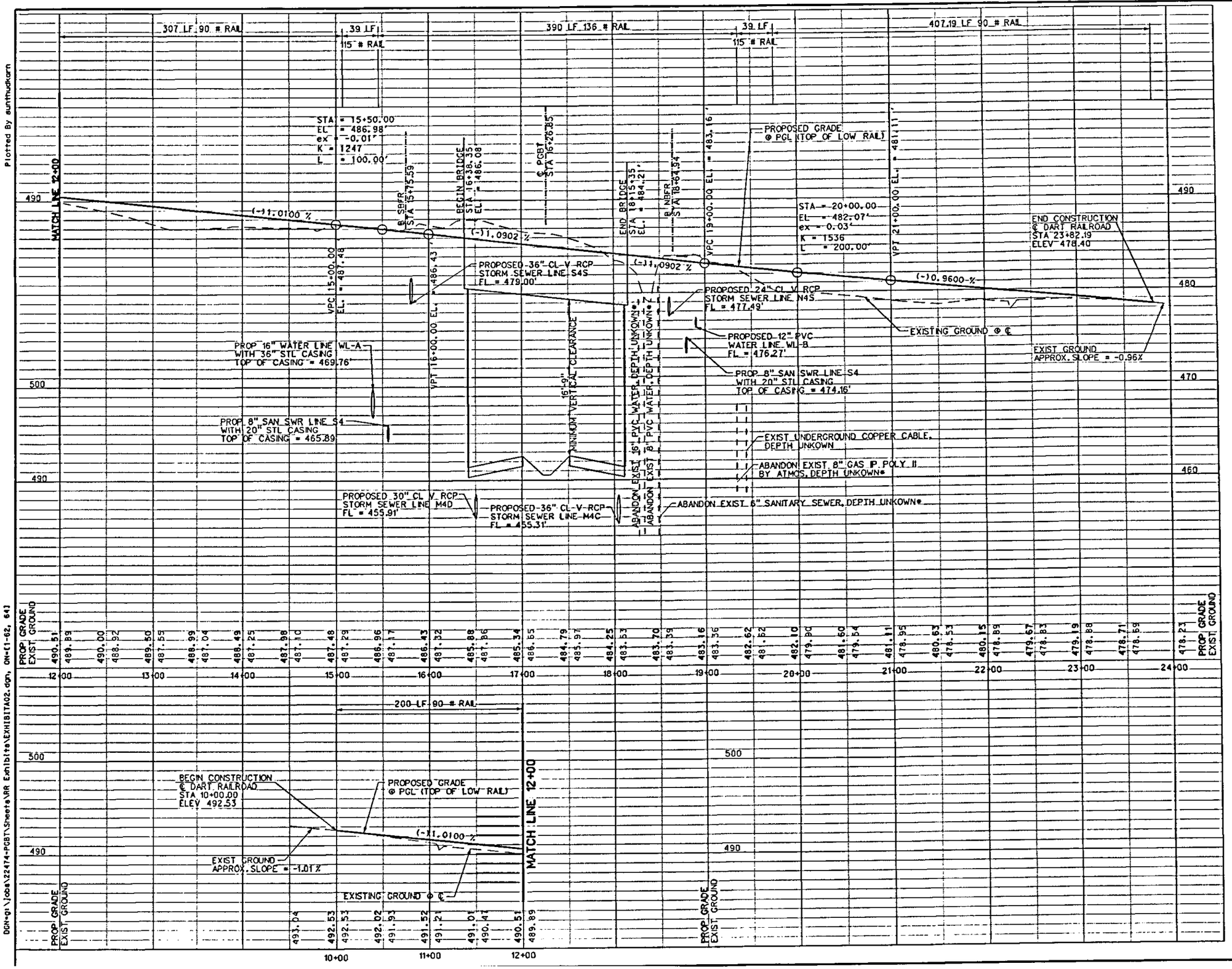

0 50 100 150 200
HORIZONTAL SCALE IN FEET

0 5 10 15 20
VERTICAL SCALE IN FEET

STATE OF TEXAS
JAMES REISER
67281
REGISTERED PROFESSIONAL ENGINEER

James Reiser 1-8-'08

NO.	DATE	REVISION	APPROV.

PRESIDENT GEORGE BUSH TURNPIKE

NTTA
NORTH TEXAS TOLLWAY AUTHORITY

EXHIBIT A
DART RAILROAD PROFILE

Parsons Brinckerhoff Quade & Douglas, Inc.
2777 Stemmons Freeway
Suite 0.13
Dallas, TX 75207

SECTION XXX

DRAWN CPS DATE 12-31-07 DESIGNED JR DATE 12-31-07
CHECKED JR DATE 12-31-07 SCALE

CONTRACT NO. 02011-PGB-06-CN-EN SHEET 2

Plotted By sunthudkarn

Plotted 09-JAN-2008 19:54
DGN=g:\Jobs\22474-PGBT\Sheets\RR Exhibits\EXHIBITA02.dgn, ON=[1-62, 64]

Plotted 09-JAN-2008 19:54

SPIRAL RR21A CURVE DATA

ANGLE	= 0°37'30"
LS	= 50.00'
R	= 2191.83'
YS	= 0.18'
XS	= 50.00'
P	= 0.05'
K	= 25.00'
LT	= 33.33'
ST	= 16.67'
LC	= 50.00'
DEFI	= 0°12'30"
DEG	= 2°30'00"

RR21 CURVE DATA

Δ = 14°11'33"
R = 2291.83
T = 285.31
L = 567.70

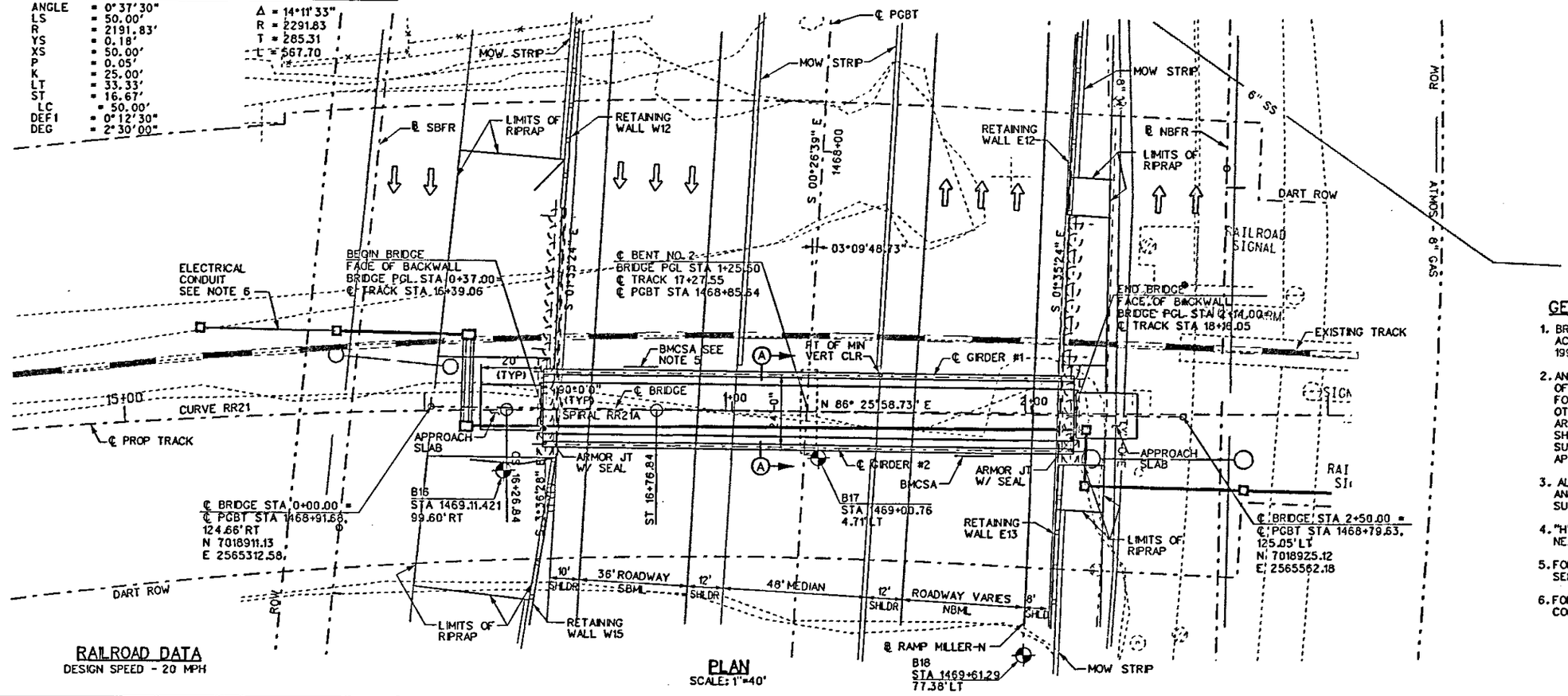

PLAN
SCALE: 1"=40'

GENERAL NOTES

1. BRIDGE DESIGNED FOR COOPER E80 LOADING IN ACCORDANCE WITH THE AREMA SPECIFICATIONS 1996 EDITION.
2. ANY SHORING REQUIRED WITHIN THE INFLUENCE OF THE RAILROAD LIVE LOAD MUST BE DESIGNED FOR COOPER E-80 LOADING IN ADDITION TO ALL OTHER APPLICABLE LOADS IN ACCORDANCE WITH AREMA RECOMMENDATION AND DART GENERAL SHORING REQUIREMENT. ALL SHORING SHALL BE SUBMITTED TO TXDOT & DART FOR REVIEW AND APPROVED PRIOR TO ANY CONSTRUCTION.
3. ALL DIMENSIONS ARE HORIZONTAL OR VERTICAL AND MUST BE CORRECTED FOR GRADE AND SUPERELEVATION WHERE APPROPRIATE.
4. "H" SHOWN IS AT PGL ROUNDED TO THE NEAREST FOOT.
5. FOR BRIDGE MOUNTED CLEARANCE SIGN DETAILS SEE RAILROAD BRIDGE CLEARANCE SIGN ASSEMBLY.
6. FOR ELECTRICAL CONDUIT AND BOXES, SEE CONDUIT LAYOUT SHEET.

RAILROAD DATA
DESIGN SPEED - 20 MPH

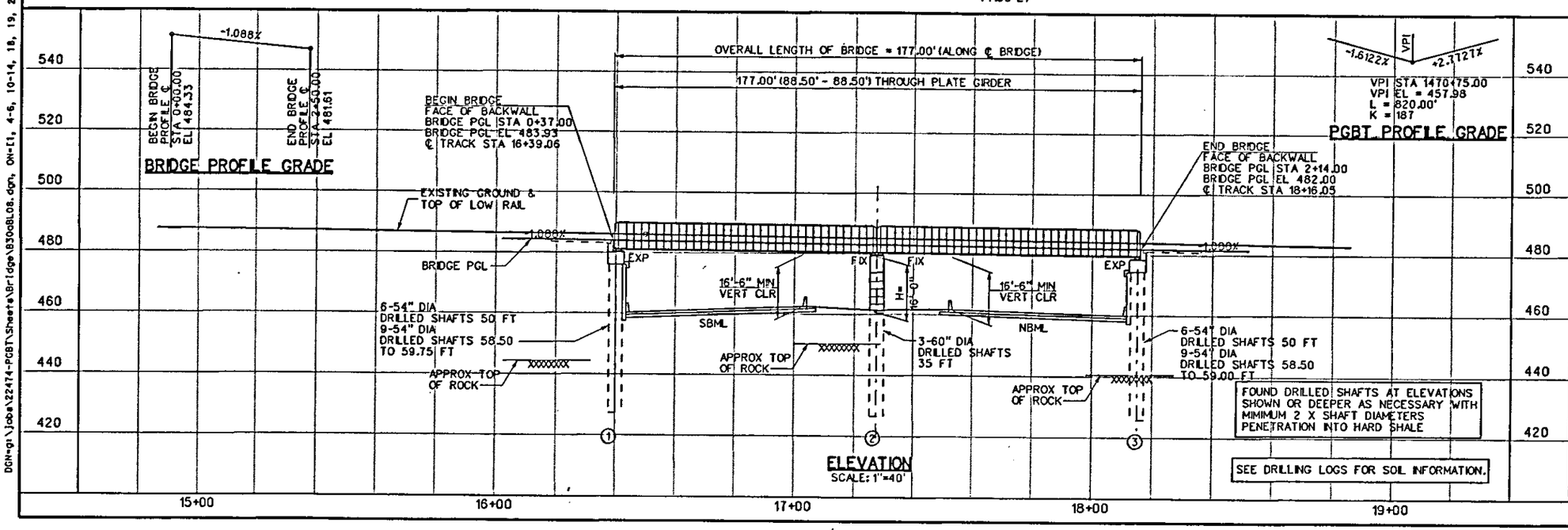

ELEVATION
SCALE: 1"=40'

NBI 18-057-0-2964-06-477

STATE OF TEXAS
JINGGANG CAO
88343
LICENSED PROFESSIONAL ENGINEER
1-3-08

NO.	DATE	REVISION	APPROV.

PRESIDENT GEORGE BUSH TURNPIKE

NTTA
NORTH TEXAS TOLLWAY AUTHORITY

EXHIBIT A
BRIDGE LAYOUT
DART RAILROAD UNDERPASS
MP 745.9

Parsons Brinckerhoff Quade & Douglas, Inc.
2777 Stemmons Freeway
Suite 1333
Dallas, TX 75207

SECTION XXX

DRAWN CPS DATE 12-31-07 DESIGNED JGC DATE 12-31-07
CHECKED OAS DATE 12-31-07 SCALE 1"=40'

CONTRACT NO. 02011-PGB-06-CN-EN SHEET 3

Plotted 03-JAN-2008 19:52

Plotted By quintrond

Plotted 03-JAN-2008 19:52
DGN=gt:\Jobs\22474-PGB\Sheets\Bridge\B30c8L08.dgn, ON=E1, 4-6, 10-14, 18, 19, 21, 23, 24, 37, 38, 56, 61, 641

0 50 100 150 200
HORIZONTAL SCALE IN FEET

N

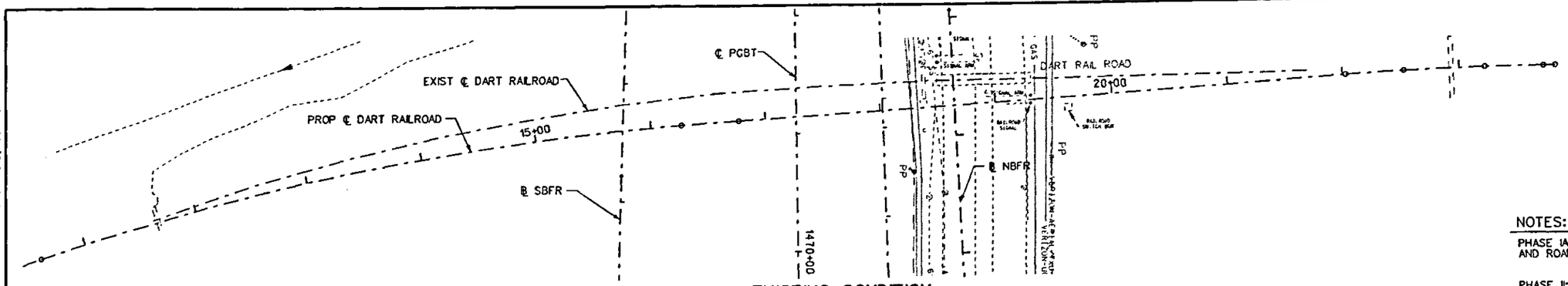

EXISTING CONDITION

NOTES:

PHASE IA & IB: CONSTRUCT NEW BRIDGE, RAILROAD TRACK AND ROAD UNDER THE BRIDGE

PHASE II: CONSTRUCT TIE-IN PARTS OF NEW RAILROAD
* COORDINATE WITH DART & DGNO. RAIL TRAFFIC TO REMAIN OPEN.

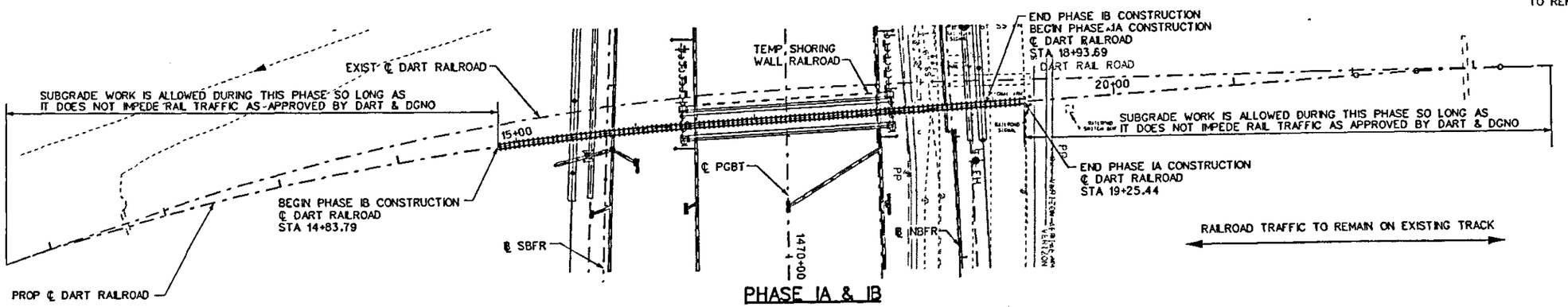

PHASE IA & IB

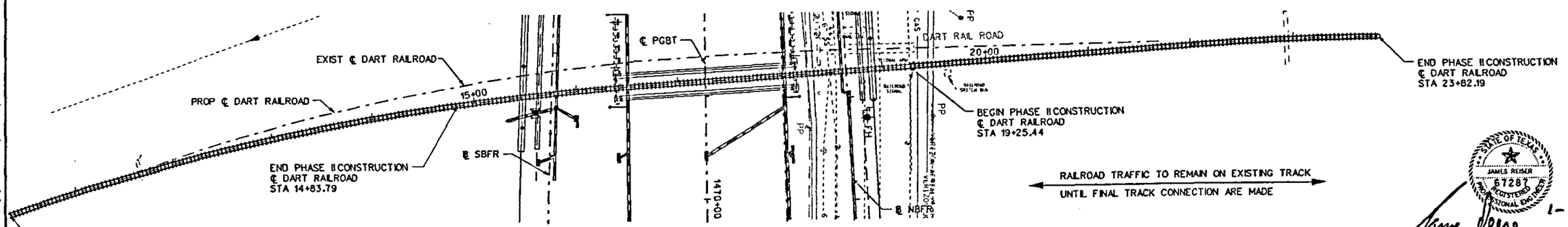

PHASE II

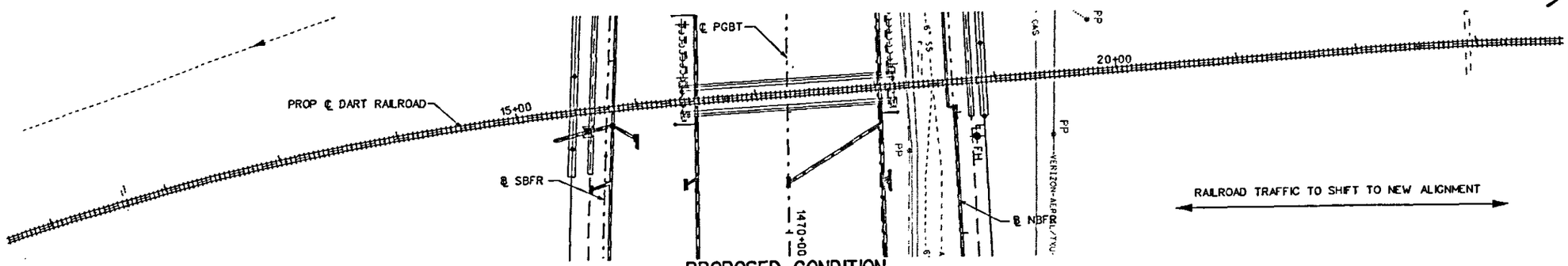

PROPOSED CONDITION

STATE OF TEXAS
JAMES REISER
67287
REGISTERED PROFESSIONAL ENGINEER

James Reiser 1-9-'08

NO.	DATE	REVISION	APPROV.

PRESIDENT GEORGE BUSH TURNPIKE

NTTA
NORTH TEXAS TOLLWAY AUTHORITY

EXHIBIT A
TRAIN UNDERPASS
SEQUENCE OF CONSTRUCTION

Parsons Brinckerhoff Quade & Douglas, Inc.
2777 Stemmons Freeway
Suite 1033
Dallas, TX 75207

SECTION XXX

DRAWN CPS DATE 12-31-07 DESIGNED JR DATE 12-31-07
CHECKED JR DATE 12-31-07 SCALE

CONTRACT NO. 02011-PGB-06-CN-EN SHEET 4

Plotted By sunthudkorn
Plotted 09-JAN-2008 20:02
DGN=g:\jobs\22474-PGBT\Sheets\RR Exhibits\EXHIBITA03.dgn, ON=[1-53, 55-62, 64]

Plotted by sunthudkarn

NOTE:

MILE POST DATA SUPPLIED BY DART.

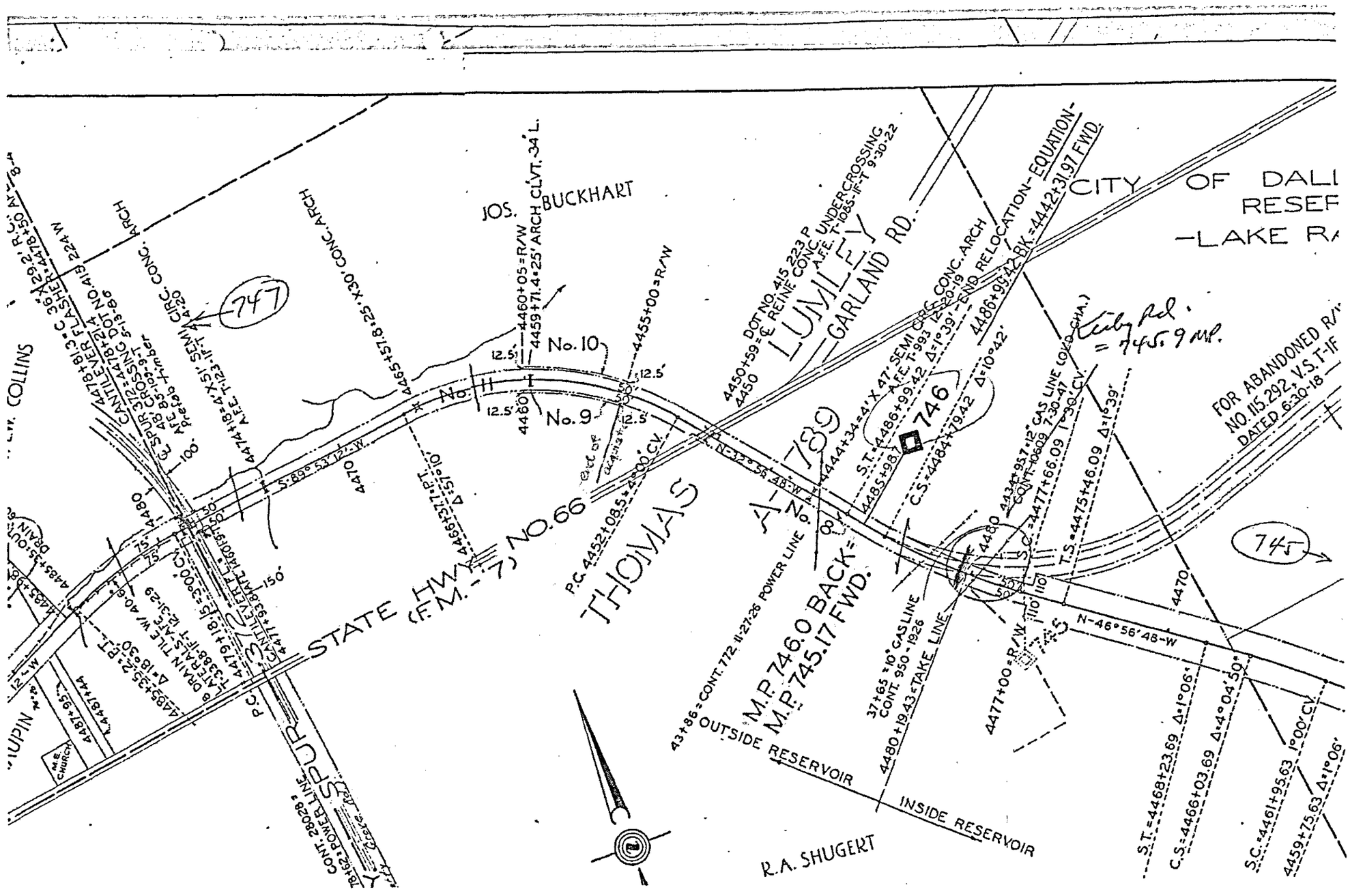

NO.	DATE	REVISION	APPROV.

PRESIDENT GEORGE BUSH TURNPIKE

NTTA
NORTH TEXAS TOLLWAY AUTHORITY

EXHIBIT A
MILE POST DATA

Parsons Brinckerhoff Quade & Douglas, Inc.
2777 Stemmons Freeway
Suite 1033
Dallas, TX 75207

SECTION XXX

DRAWN ____ DATE ____ DESIGNED ____ DATE ____
CHECKED ____ DATE ____ SCALE N. T. S.

CONTRACT NO. 02011-PGB-06-CN-EN SHEET 5

SHEET 1 OF 1

Plotted 09-JAN-2008 20:03
DGN=g:\Jobs\22474-PGBT\Sheets\RR Exhibits\MilePost.dgn, ON=[1-64]

Plotted 09-JAN-2008 20:03

NORTH TEXAS TOLLWAY AUTHORITY

DESIGN SPEED 70 MPH (MAIN LANES)
DESIGN SPEED 50 MPH (RAMPS)
DESIGN SPEED 45 MPH (FRONTAGE ROADS)
DESIGN SPEED 40 MPH (MERRITT/LIBERTY GROVE CONNECTOR-CROSS STREET)
DESIGN SPEED 40 MPH (LIBERTY GROVE-CROSS STREET)
DESIGN SPEED 45 MPH (SH 66 - CROSS STREET)
DESIGN SPEED 40 MPH (MAIN STREET - CROSS STREET)
DESIGN SPEED 30 MPH (REMAINING SIDE STREETS)

GRADING, DRAINAGE, PAVING AND STRUCTURES
PRESIDENT GEORGE BUSH TURNPIKE

SECTION XXX
VOLUMES 1 THRU 4
CSJ 2964-06-018
DALLAS COUNTY

EXHIBIT B

TDLR REVIEW REQUIRED

FINAL PLANS:
LETTING DATE: _____
CONTRACTOR: _____
CONTRACTOR'S ADDRESS: _____
_____
DATE WORK BEGAN: _____
DATE WORK WAS COMPLETED: _____
DATE WORK WAS ACCEPTED: _____

AS-BUILT PLANS:
FINAL RECORD DRAWING DATE: _____

_____
Construction Manager

CONSTRUCTION CONTRACT NO. 02011-PGB-06-CN-EN

FROM: NORTH OF FUTURE MERRITT/LIBERTY GROVE CONNECTOR
TO: SOUTH OF MAIN ST
NET LENGTH OF PROJECT: 14500 FT = 2.746 MILE(S)
ROADWAY LENGTH: 13522 FT = 2.561 MILE(S)
BRIDGE LENGTH: 978 FT = 0.185 MILE(S)

CONSTRUCT SIX LANE TOLLWAY ON NEW LOCATION CONSISTING OF GRADING, DRAINAGE, STRUCTURES, CONCRETE PAVEMENTS, WALLS, ILLUMINATION, SIGN STRUCTURES, PAVEMENT MARKINGS, ITS INFRASTRUCTURE, SIGNALS AND CITY UTILITIES

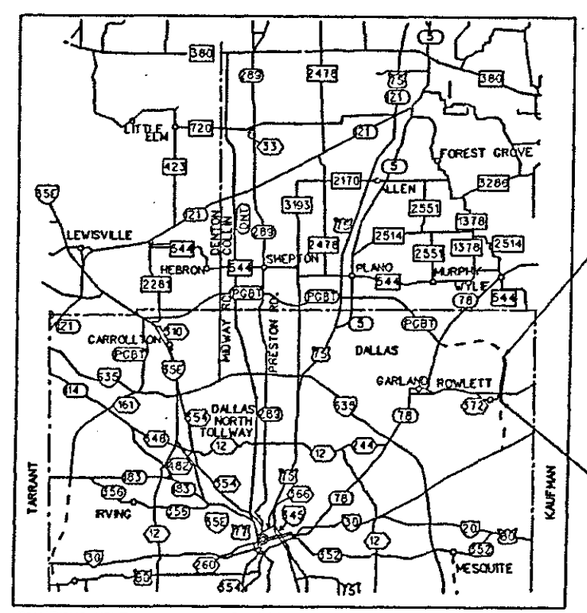

SCALE N.T.S.

BEGIN PROJECT 02011-PGB-06-CN-EN
STA. 1352+00.00
END PROJECT 02009-PGB-08-CN-EN

END PROJECT 02011-PGB-06-CN-EN
STA. 1497+00.00
BEGIN PROJECT 02013-PGB-06-CN-EN

EQUATIONS: NONE
RAILROADS: DART
℄ PGBT STA 1468+60.71
EXCEPTIONS: NONE

NOTE:

SPECIFICATIONS ADOPTED BY THE TEXAS DEPARTMENT OF TRANSPORTATION, JUNE 1, 2004, AND SPECIAL PROVISIONS AND SPECIAL SPECIFICATIONS PREPARED BY THE NORTH TEXAS TOLLWAY AUTHORITY, SHALL GOVERN ON THIS PROJECT.

THE CONTRACTOR SHALL MAKE HIS OWN INVESTIGATION AND ARRANGEMENTS, IF ANY, FOR RAIL DELIVERY POINTS AND TRACKAGE FACILITIES.

Prepared by:
PARSONS BRINCKERHOFF AMERICAS, INC.
James Reiser, P.E.
Project Manager
Date: December 27, 2007

Recommended by:
NORTH TEXAS TOLLWAY AUTHORITY
Assistant Executive Director
Date: 1-2-8

TEXAS DEPARTMENT OF TRANSPORTATION

RECOMMENDED FOR LETTING 20
_____, P.E.
AREA ENGINEER

RECOMMENDED FOR LETTING 20
_____, P.E.
DIRECTOR OF TRANSPORTATION PLANNING & DEVELOPMENT

RECOMMENDED FOR LETTING: 20
_____, P.E.
DISTRICT ENGINEER

APPROVED FOR LETTING 20
_____, P.E.
DIRECTOR, TRAFFIC OPERATIONS DIVISION

APPROVED FOR LETTING 20
_____, P.E.
DIRECTOR, DESIGN DIVISION

p:\projects\PGBTee\XXX\sheet4\TCP\B30oCM01.dgn

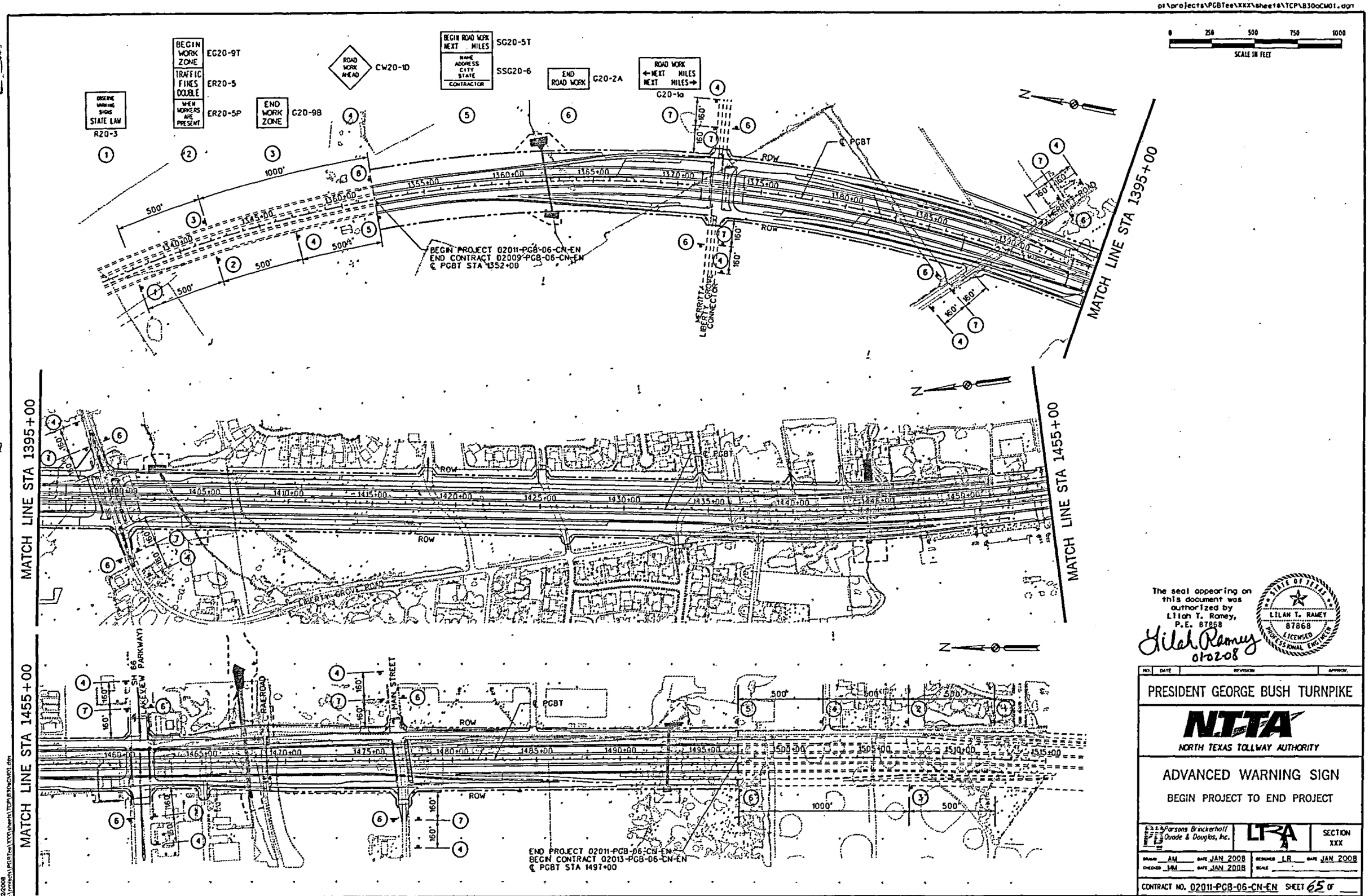

The seal appearing on this document was authorized by Lilah T. Ramey, P.E. 87868

Lilah Ramey
01-02-08

STATE OF TEXAS
LILAH T. RAMEY
87868
LICENSED
PROFESSIONAL ENGINEER

NO.	DATE	REVISION	APPROV.

PRESIDENT GEORGE BUSH TURNPIKE

NTTA
NORTH TEXAS TOLLWAY AUTHORITY

ADVANCED WARNING SIGN

BEGIN PROJECT TO END PROJECT

Parsons Brinckerhoff Quade & Douglas, Inc.

LRA

SECTION XXX

DRAWN AM DATE JAN 2008 DESIGNED LR DATE JAN 2008
CHECKED MM DATE JAN 2008 SCALE

CONTRACT NO. 02011-PGB-06-CN-EN SHEET 65 OF

6:02:39 PM
1/2/2008
p:\projects\PGBTee\XXX\sheet4\TCP\B30oCM01.dgn

6:02:39 PM

TRAFFIC CONTROL PLANS GENERAL NOTES

1) THE CONTRACTOR WILL NOT HAVE EXCLUSIVE USE OF THE RIGHT-OF-WAY BUT SHALL COOPERATE IN THE USE OF THE RIGHT-OF-WAY WITH THE NORTH TEXAS TOLLWAY AUTHORITY (NTTA), OTHER VARIOUS PUBLIC UTILITY COMPANIES, THEIR CONTRACTORS, AND OTHER NTTA ROADWAY CONTRACTORS AS MAY BE REQUIRED TO ALLOW FOR UTILITY ADJUSTMENTS AND ROAD CONSTRUCTION.

2) ALL DETOURS, HORIZONTAL TRAFFIC MOVEMENTS, TEMPORARY CTB, ILLUMINATION SYSTEM, DRAINAGE, ETC. ARE DIRECTLY RELATED TO THE SEQUENCE OF OPERATIONS IN CONFORMITY WITH THE DETAILS SHOWN ON PLANS. THE CONTRACTOR MUST ENSURE ADEQUATE DRAINAGE DURING ALL PHASES OF CONSTRUCTION. THE CONTRACTOR MAY PROPOSE/RECOMMEND MODIFICATIONS TO THE SEQUENCEOF WORK FOR CONSIDERATION BY THE ENGINEER. ANY PROPOSED MODIFICATION TO TCP PHASING LAYOUT BY THE CONTRACTOR SHALL INCLUDE ALL CHANGES TO THE VARIOUS PAY ITEMS, IMPACT TO TRAFFIC, EFFECT TO OVERALL PROJECT IN TIME AND COST, ETC. THIS ALSO INCLUDES A REVISED CPM SCHEDULE. IF ANY PROPOSAL IS TO BE IMPLEMENTED, THE CONTRACTOR WILL BE RESPONSIBLE FOR DEVELOPING DETAILED PLAN SHEETS SEALED BY A REGISTERED PROFESSIONAL ENGINEER FOR INCLUSION WITH THE CHANGE ORDER. THE CONTRACTOR SHALL NOT PROCEED WITH ANY CONSTRUCTION OPERATIONS BASED ON A REVISED PHASE/ SEQUENCE UNTIL HE OBTAINS WRITTEN APPROVAL FROM THE ENGINEER.

3) ALL TRAFFIC CONTROL ACTIVITIES SHALL BE COORDINATED WITH OPERATIONS SUCH AS UTILITY RELOCATIONS, SW3P, RETAINING WALLS, DRAINAGE AND BRIDGE STRUCTURES, TRAFFIC SIGNALS, ETC. CONTRACTOR TO REFER TO THE GENERAL NOTES OF EACH DISCIPLINE FOR ADDITIONAL INFORMATION.

4) TRAFFIC MUST BE HANDLED OVER THE ENTIRE PROJECT DURING CONSTRUCTION.

5) THE CONTRACTOR SHALL PROVIDE THE CITY OF ROWLETT WITH TWO WEEKS NOTICE BEFORE TRAFFIC CONTROL PLAN IS INITIATED AND BEFORE THE TRAFFIC CONTROL PLAN IS CHANGED IN THE FIELD SUBSEQUENT TO CONSTRUCTION.

6) THE CONTRACTOR SHALL NOTIFY TxDOT OF IMPENDING OR UPCOMING LANE CLOSURES ON SH 66, WITH AT LEAST TWO WEEKS NOTICE.

7) THE CONTRACTOR SHALL NOTIFY THE ENGINEER OF IMPENDING OR UPCOMING LANE CLOSURES AT LEAST:
   A) ONE WEEK IN ADVANCE OF CLOSURES INVOLVING ONE LANE ON SERVICE ROADS OR INTERSECTING STREETS.
   B) FOUR WEEKS IN ADVANCE OF MULTIPLE LANE OR FULL FACILITY CLOSURES.

8) FOR THIS PROJECT, UNLESS OTHERWISE NOTED IN THE PLANS AND/OR AS DIRECTED BY THE ENGINEER, LANE CLOSURES SHALL BE LIMITED ACCORDING TO THE FOLLOWING RESTRICTIONS:
   A) RAMPS, FRONTAGE ROADS, AND INTERSECTING STREETS:
      I) PARTIAL CLOSURES WILL BE LIMITED TO THE HOURS OF 9:00 A.M. TO 3:30 P.M. MONDAY - FRIDAY
      II) FULL CLOSURES SHALL BE LIMITED TO THE HOURS OF 10:00 P.M. TO 5:30 A.M. SATURDAY-THURSDAY AND ONLY PERMITTED FOR MAJOR BRIDGE CONSTRUCTION OPERATIONS AS APPROVED BY THE ENGINEER.
   B) FRONTAGE ROADS:
      I) UNLESS OTHERWISE SHOWN ON THE TCP, AT LEAST ONE LANE MUST REMAIN OPEN BETWEEN THE HOURS OF 9:00 A.M. AND 3:30 P.M. MONDAY THROUGH FRIDAY AND BETWEEN 3:00 A.M. SATURDAY AND 5:30 A.M. MONDAY.

9) IT IS ADVISABLE FOR THE CONTRACTOR TO HIRE OFF-DUTY POLICE OFFICERS WITH MARKED VEHICLES TO ASSIST IN TRAFFIC CONTROL OPERATIONS INVOLVING FULL LANE CLOSURES ON SH 66 (LAKEVIEW PARKWAY) AND ANYWHERE ELSE IT IS DEEMED APPROPRIATE.

10) IT IS THE INTENT OF THE PLANS TO PROVIDE FOR THE SAFE PASSAGE OF LOCAL TRAFFIC AT ALL TIMES. THE CONTRACTOR WILL BE REQUIRED TO PLAN AND EXECUTE HIS OPERATION IN A MANNER THAT WILL ENSURE THE TRAVELING PUBLIC AND ABUTTING PROPERTY OWNERS A MINIMUM OF INCONVENIENCE.

11) THE CONTRACTOR SHALL DEVELOP HIS SEQUENCE OF WORK AND PLAN HIS OPERATIONS SUCH THAT ACCESS TO INTERSECTING STREETS AND DRIVEWAYS ARE MAINTAINED THROUGHOUT THE PROJECT. ADEQUACY OF THE ACCESS WILL BE AT THE DISCRETION OF THE ENGINEER.

12) A MINIMUM OF 2 PORTABLE MESSAGE SIGNS SHALL BE ON SITE AND IN GOOD WORKING CONDITION AT ALL TIMES TO BE PLACED AS DIRECTED BY THE ENGINEER.

13) NO WORK SHALL BE ALLOWED DIRECTLY OVER TRAFFIC, UNLESS APPROVED BY ENGINEER.

14) THE CONTRACTOR SHALL COORDINATE WITH ADJACENT SECTIONS.

15) CONTRACTOR SHALL INSTALL/CONSTRUCT DRILL SHAFTS FOR ILLUMINATION, CCTV TOWERS, TRAFFIC SIGNAL POLES AND GUIDE SIGN BRIDGE COLUMNS THAT ARE WITHIN THE MSE STRAP ZONE PRIOR TO INSTALLING THE MSE STRAPS. IT SHALL BE THE RESPONSIBILITY OF THE CONTRACTOR TO DETERMINE THE STRAP ZONE LIMITS.

SEQUENCE OF WORK

PHASE 1

1. CONSTRUCT NB FRONTAGE RD (NBFR) FROM BEGIN PROJECT TO STA 305+00 AND FROM LIBERTY GROVE RD TO STA 378+20.
2. CONSTRUCT TEMPORARY NB DETOUR AND TEMPORARY PAVEMENT AT LIBERTY GROVE RD, SH 66 (LAKEVIEW PARKWAY) AND MAIN ST.
3. CONSTRUCT MAINLANES FROM BEGIN OF PROJECT TO STA 1388+00, AND FROM LIBERTY GROVE RD TO STA 1428+00.
4. CONSTRUCT UTILITY LINES 6" SS-A1, 8" WL-B, 24" WL-C, 8" WL-D, 12" SS-C, 8" WL-F, 8" WL-H, AND A PORTION OF LINES 8" WL-M, 15" SS-F AND 12" WL-P.
5. CONSTRUCT MAINLANE BRIDGE AT MERRITT/LIBERTY GROVE CONNECTOR.
6. CONSTRUCT SOUTHBOUND FRONTAGE RD (SBFR) FROM BEGIN PROJECT TO STA 305+50 AND LIBERTY GROVE RD TO STA 350+00. SBFR AT ROYAL BAY DR IS REMAIN OPEN TO TRAFFIC THROUGHOUT THIS PHASE.
7. CONSTRUCT CULVERT 1,2, 4 AND A PORTION OF 3.

SEQUENCE OF WORK

PHASE 1A

1. DETOUR TRAFFIC ONTO TEMPORARY PAVEMENT AT LIBERTY GROVE RD.
2. CONSTRUCT SOUTHBOUND (SB) AND NORTHBOUND (NB) MAINLANE BRIDGE SPANS 6 & 7.
3. INSTALL TEMPORARY RAILROAD GATES AND UTILITIES AT RAILROAD.
4. DETOUR TRAFFIC ONTO SB KIRBY RD, BETWEEN SH 66 AND MAIN ST.
5. CONSTRUCT A PORTION OF THE PROPOSED RAILROAD.
6. INSTALL TEMPORARY PAVEMENT ON NB KIRBY RD AT THE RAILROAD.

PHASE 1B

1. INSTALL TEMPORARY RAILROAD GATES AND UTILITIES
2. DETOUR TRAFFIC ONTO NB KIRBY RD, BETWEEN SH 66 AND MAIN ST.
3. INSTALL TEMPORARY SHORING WALL AT RAILROAD.
4. CONSTRUCT THE RAILROAD BRIDGE AND THE REMAINDER OF THE RAILROAD.
5. OPEN RAILROAD TRAFFIC TO THE RAILROAD BRIDGE WHEN IT IS COMPLETED.

PHASE 2

1. DETOUR TRAFFIC ONTO TEMPORARY PAVEMENT AT EXISTING MERRITT RD, SH 66, MAIN ST AND NBFR DETOUR. DETOUR TRAFFIC AT ROSEBUD DR.
2. INSTALL TEMPORARY TRAFFIC SIGNAL AT SH 66.
3. ~~INSTALL TEMPORARY SHORING WALLS N1, S1, S2 AND S3.~~
4. CONSTRUCT 10' WIDTH OF MAINLANES ALONG WITH RETAINING WALLS BETWEEN STA 1452+00 TO STA 1459+97.77 AND STA 1462+19.92 TO STA 1475+77.77.
5. CONSTRUCT THE REMAINDER OF MAINLANES FROM STA 1392+00 TO STA 1428+00.
6. CONSTRUCT THE REMAINDER OF THE MAINLANE BRIDGE AT LIBERTY GROVE RD.
7. CONSTRUCT SBFR FROM EXISTING MERRITT RD TO LIBERTY GROVE RD, SHADY LN TO STA 381+75 AND SH 66 TO STA 394+22.87.
8. CONSTRUCT NBFR FROM SH66 TO STA 381+75, AND FROM MAIN ST TO END OF NBFR.
9. CONSTRUCT A PORTION OF UTILITY LINES 8" WL-M, 15" SS-F, 12" WL-P, 8" SS-J SS-K AND 12" WL-Q.
10. CONSTRUCT TEMPORARY PAVEMENT AT SBFR FROM STA 350+00 TO STA 355+75 AND FROM STA 391+60.13 TO MAIN ST.
11. CONSTRUCT THE REMAINDER OF CULVERT 3 AND A PORTION OF CULVERT 5.

PHASE 3

1. DETOUR EASTBOUND AND WESTBOUND TRAFFIC ON EXISTING MERRITT RD TO LIBERTY GROVE RD VIA THE SBFR.
2. OPEN SBFR FROM LIBERTY GROVE RD TO MAIN ST TO SINGLE LANE TRAFFIC. ALLOW TWO LANE TRAFFIC ON NBFR FROM LIBERTY GROVE RD TO SH 66.
3. INSTALL TEMPORARY SHORING WALLS N2, N3, S4. PORTION OF S1 TO REMAIN.
4. CONSTRUCT THE REMAINDER OF MAINLANES FROM BEGIN PROJECT TO STA 1439+75.
5. CONSTRUCT MAINLANES FROM SH 66 TO STA 1475+78.19 AND MAIN ST TO END OF PROJECT INSTALL TEMPORARY SHORING WALLS N2,N3,S4, AT MAIN ST AND SH 66.
6. CONSTRUCT THE REMAINDER OF SBFR FROM BEGIN PROJECT TO LIBERTY GROVE RD AND FROM MAIN ST TO END OF PROJECT. CONSTRUCT A PORTION OF SBFR FROM STA 351+00 TO SHADY LN.
7. CONSTRUCT THE REMAINDER OF NBFR BETWEEN THE BEGIN OF THE PROJECT TO LIBERTY GROVE AND FROM SH 66 TO STA 393+75.
8. CONSTRUCT THE REMAINDER OF CULVERT 5.
9. CONSTRUCT A PORTION OF MAINLANE UNDERPASS BRIDGES AT SH 66 AND MAIN ST.
10. CONSTRUCT THE REMAINING PORTIONS OF ULITIY LINES 8" WL-M, 15" SS-F, SS-K 12" WL-P, 8" SS-J AND 12" WL-Q. LIFT STATION AT APPROX STA1467+50, TO REMAIN OPERATIONAL UNTIL PROPOSED LINE HAS BEEN COMPLETED.

PHASE4

1. DETOUR TRAFFIC ONTO PERMANENT PAVEMENT AT SH 66 AND MAIN ST.
2. CONSTRUCT TEMPORARY SHORING WALL N4.
3. OPEN SBFR AND NBFR FROM MERRITT/LIBERTY GROVE CONNECTOR TO LIBERTY GROVE RD.
4. CONSTRUCT THE REMAINDER OF THE MAINLANES, SBFR, NBFR AND CROSS STREETS FOR THE PROJECT.
5. CONSTRUCT THE REMAINDER OF SH 66 AND MAIN ST BRIDGES.
6. CONSTRUCT UTILITY LINES 18" SSFM-A AND 18" SSFM-B.

The seal appearing on this document was authorized by Lilah T. Ramey, P.E. 87868

Lilah Ramey 01-03-08

STATE OF TEXAS — LILAH T. RAMEY — 87868 — LICENSED — PROFESSIONAL ENGINEER

NO.	DATE	REVISION	APPROV.

PRESIDENT GEORGE BUSH TURNPIKE

NTTA
NORTH TEXAS TOLLWAY AUTHORITY

TRAFFIC CONTROL PLAN NARRATIVE

Parsons Brinckerhoff Quade & Douglas, Inc. | LTRA | SECTION XXX

DRAWN AM DATE JAN 2008 | DESIGNED LR DATE JAN 2008
CHECKED MM DATE JAN 2008 | SCALE

CONTRACT NO. 02011-PGB-06-CN-EN SHEET 66 OF

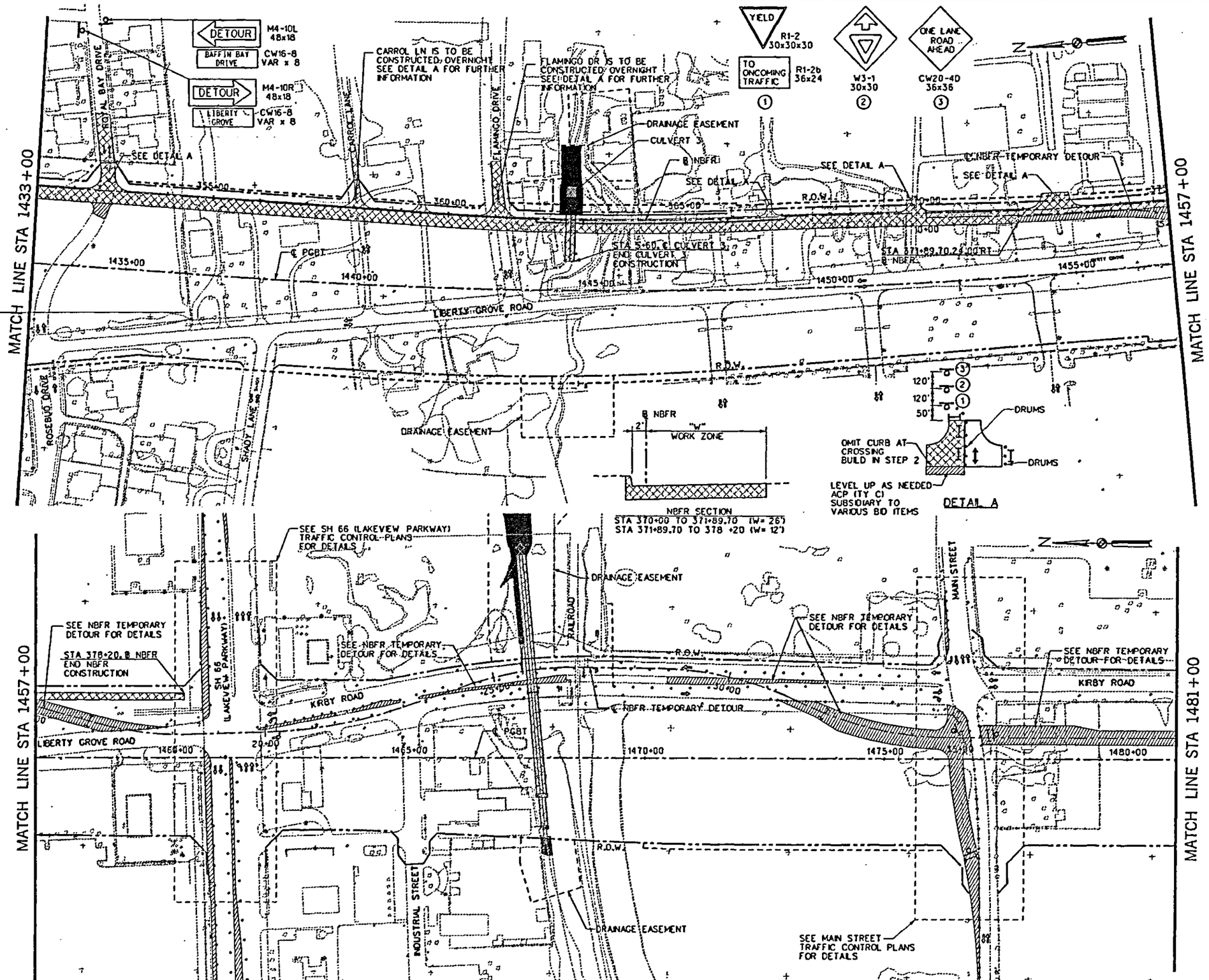

0 100 200 300 400
SCALE IN FEET

LEGEND

- CONSTRUCTION THIS PHASE
- BRIDGE CONSTRUCTION
- TEMPORARY PAVEMENT
- LOW PROFILE CONCRETE BARRIER (LPCB)
- PORTABLE CONC. TRAFFIC BARRIER (PCTB)
- CHANNELIZATION DEVICES
- SIGN
- TRACC
- TYPE III BARRICADE
- TEMPORARY SHORING WALL
- TRAFFIC FLOW ARROW (PROP)
- TRAFFIC FLOW ARROW (EXIST)
- (A) 4" SOLID (WHITE) NON-REMOVABLE
- (B) 4" SOLID (YELLOW) NON-REMOVABLE
- (C) 4" BROKEN (WHITE) NON-REMOVABLE
- (D) 4" SOLID (WHITE) REMOVABLE
- (E) 4" SOLID (YELLOW) REMOVABLE
- (F) 4" BROKEN (WHITE) REMOVABLE
- (G) 24" SOLID (WHITE) REMOVABLE
- (H) 4" DOUBLE SOLID (YELLOW) REMOVABLE
- (J) 4" BROKEN (YELLOW) REMOVABLE
- (K) 4" DOT (WHITE) REMOVABLE
- (L) 4" DOUBLE SOLID (YELLOW) NON-REMOVABLE
- (M) 8" SOLID (WHITE) REMOVABLE

The seal appearing on this document was authorized by Lilah T. Ramey, P.E. 87868

Lilah Ramey 01-02-08

STATE OF TEXAS · LILAH T. RAMEY · 87868 · LICENSED · PROFESSIONAL ENGINEER

NO.	DATE	REVISION	APPROV.

PRESIDENT GEORGE BUSH TURNPIKE

NTTA
NORTH TEXAS TOLLWAY AUTHORITY

TRAFFIC CONTROL PLAN
PHASE 1
STA 1433+00 TO STA 1481+00

Parsons Brinckerhoff Quade & Douglas, Inc. | LTRA | SECTION XXX

DRAWN AM DATE JAN 2008 | DESIGNED LR DATE JAN 2008
CHECKED MM DATE JAN 2008 | SCALE 1"=200'

CONTRACT NO. 02011-PGB-06-CN-EN SHEET 77 OF ___

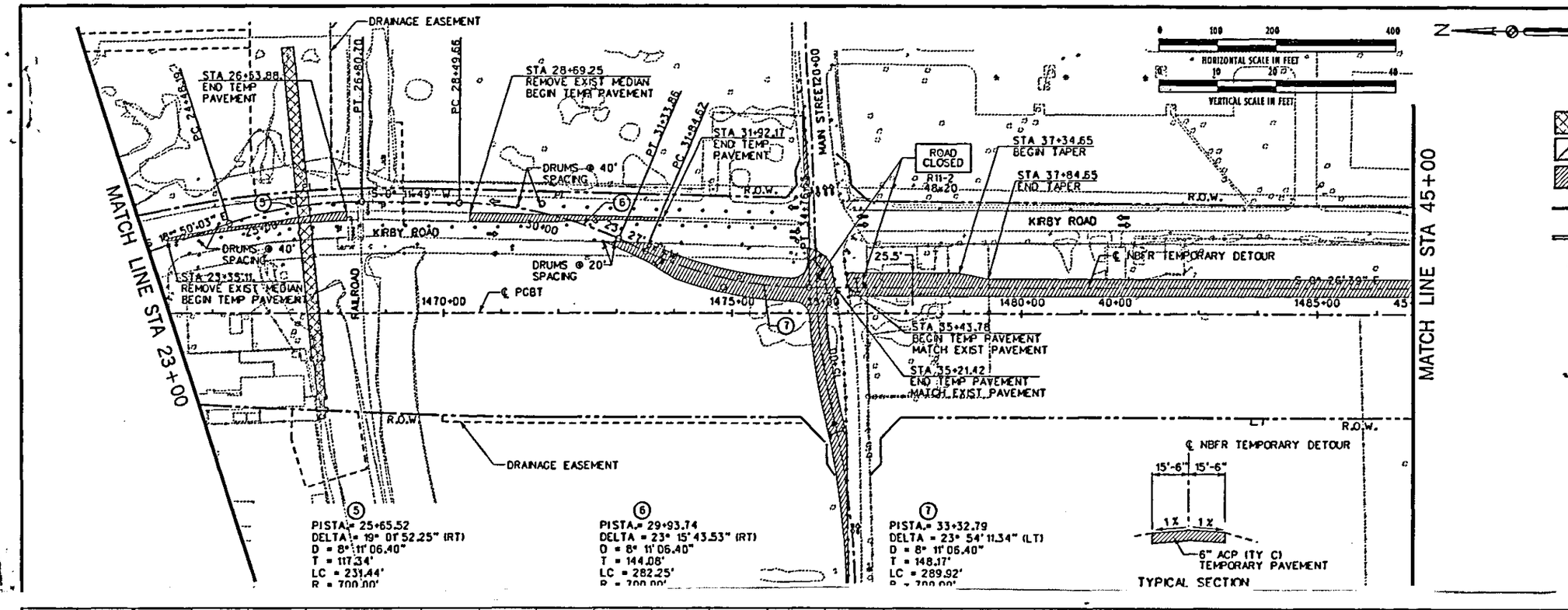

LEGEND

- CONSTRUCTION THIS PHASE
- BRIDGE CONSTRUCTION
- TEMPORARY PAVEMENT
- LOW PROFILE CONCRETE BARRIER (LPCB)
- PORTABLE CONC. TRAFFIC BARRIER (PCTB)
- CHANNELIZATION DEVICES
- SIGN
- TRACC
- TYPE III BARRICADE
- TEMPORARY SHORING WALL
- TRAFFIC FLOW ARROW (PROP)
- TRAFFIC FLOW ARROW (EXIST)
- (A) 4" SOLID (WHITE) NON-REMOVABLE
- (B) 4" SOLID (YELLOW) NON-REMOVABLE
- (C) 4" BROKEN (WHITE) NON-REMOVABLE
- (D) 4" SOLID (WHITE) REMOVABLE
- (E) 4" SOLID (YELLOW) REMOVABLE
- (F) 4" BROKEN (WHITE) REMOVABLE
- (G) 24" SOLID (WHITE) REMOVABLE
- (H) 4" DOUBLE SOLID (YELLOW) REMOVABLE
- (J) 4" BROKEN (YELLOW) REMOVABLE
- (K) 4" DOT (WHITE) REMOVABLE
- (L) 4" DOUBLE SOLID (YELLOW) NON-REMOVABLE
- (M) 8" SOLID (WHITE) REMOVABLE

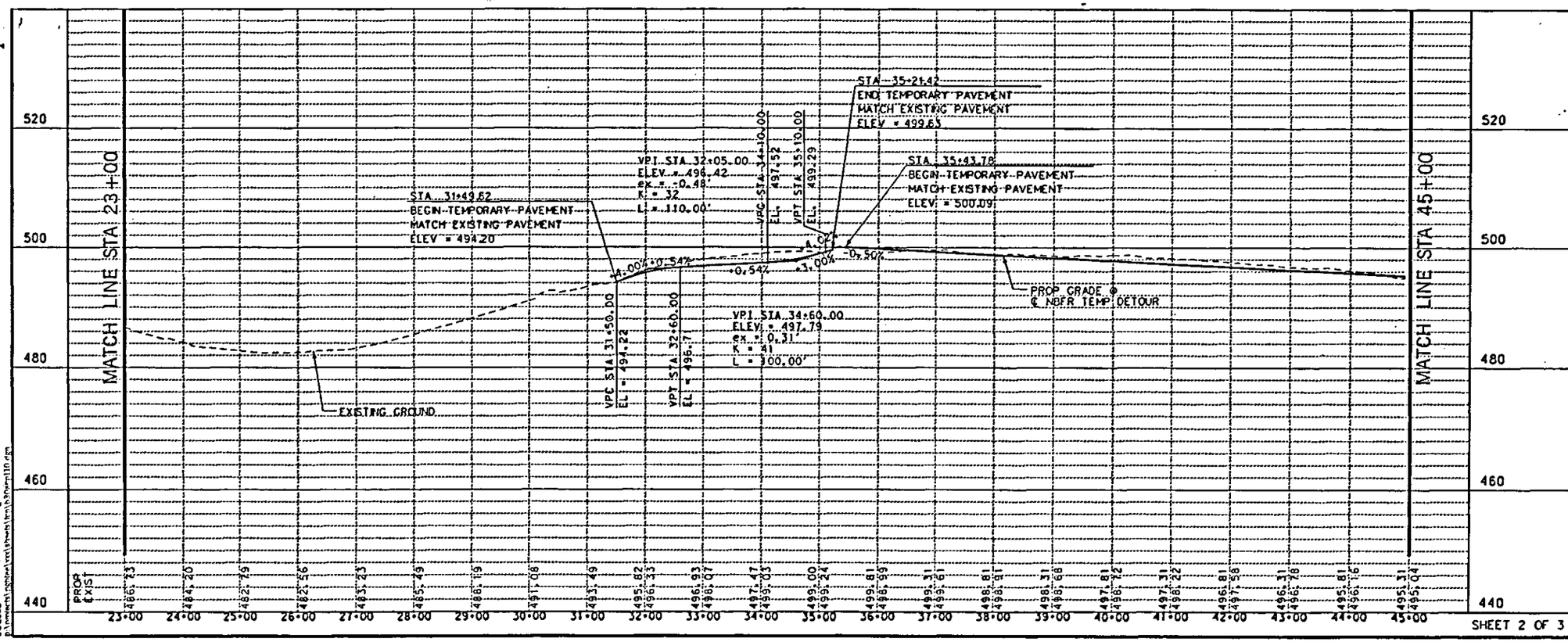

The seal appearing on this document was authorized by Lilah T. Ramey, P.E. 87868

Lilah Ramey 01-02-08

STATE OF TEXAS — LILAH T. RAMEY — 87868 — LICENSED PROFESSIONAL ENGINEER

NO.	DATE	REVISION	APPROV.

PRESIDENT GEORGE BUSH TURNPIKE

NTTA
NORTH TEXAS TOLLWAY AUTHORITY

TRAFFIC CONTROL PLAN
PHASE 1
NBFR TEMPORARY DETOUR
STA 23+00 TO STA 45+00

Parsons Brinckerhoff Quade & Douglas, Inc. — LTRA — SECTION XXX

DRAWN AM DATE JAN 2008 — DESIGNED LR DATE JAN 2008
CHECKED MM DATE JAN 2008 — SCALE PLAN: 1"=200' PROF: 1"=20'

SHEET 2 OF 3 — CONTRACT NO. 02011-PGB-06-CN-EN SHEET 89 OF ___

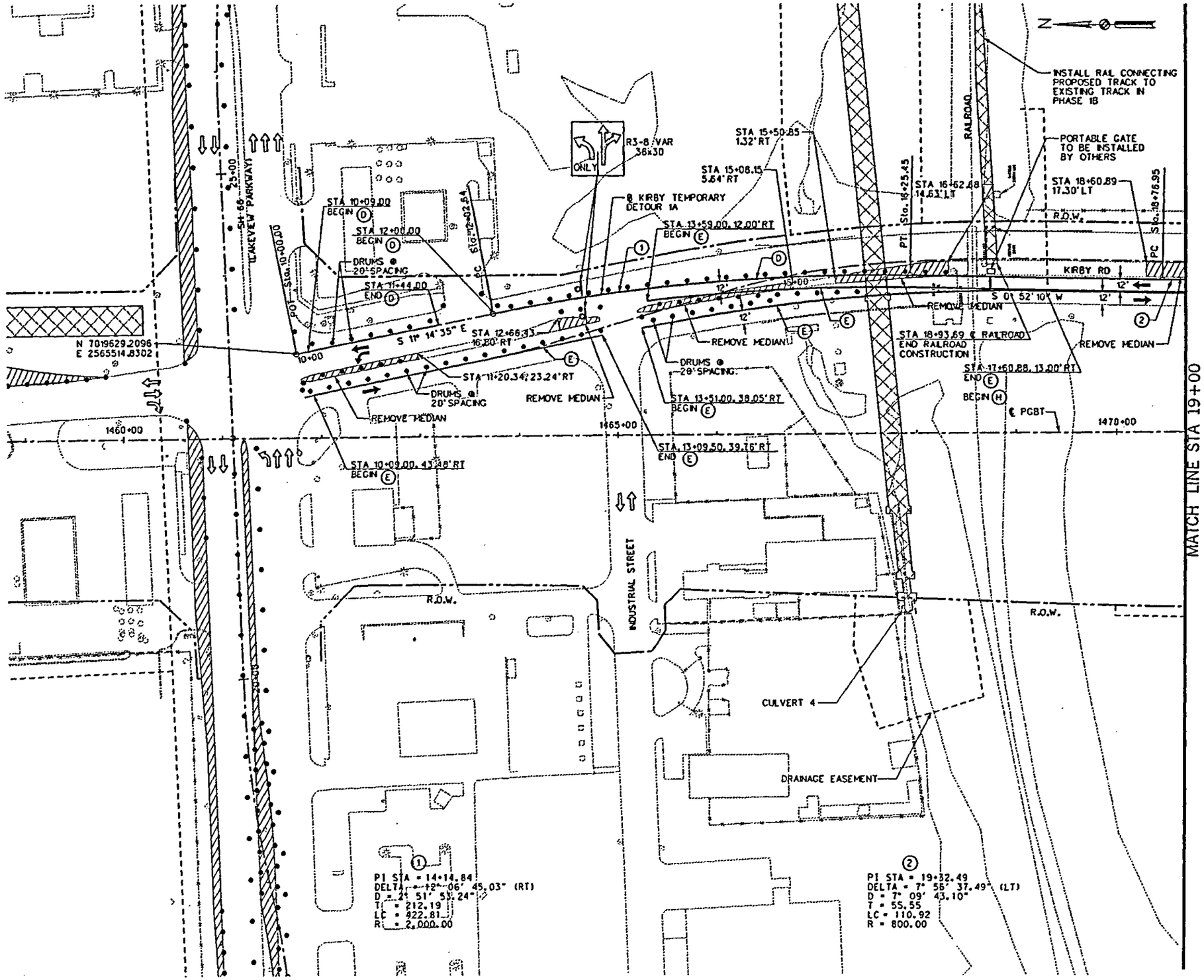

0 50 100 150 200
SCALE IN FEET

LEGEND

- CONSTRUCTION THIS PHASE
- CONSTRUCTION PREVIOUS PHASE
- BRIDGE CONSTRUCTION
- TEMPORARY PAVEMENT
- LOW PROFILE CONCRETE BARRIER (LPCB)
- PORTABLE CONC. TRAFFIC BARRIER (PCTB)
- CHANNELIZATION DEVICES
- SIGN
- TRACC
- TYPE III BARRICADE
- TEMPORARY SHORING WALL
- TRAFFIC FLOW ARROW (PROP)
- TRAFFIC FLOW ARROW (EXIST)
- (A) 4" SOLID (WHITE) NON-REMOVABLE
- (B) 4" SOLID (YELLOW) NON-REMOVABLE
- (C) 4" BROKEN (WHITE) NON-REMOVABLE
- (D) 4" SOLID (WHITE) REMOVABLE
- (E) 4" SOLID (YELLOW) REMOVABLE
- (F) 4" BROKEN (WHITE) REMOVABLE
- (G) 24" SOLID (WHITE) REMOVABLE
- (H) 4" DOUBLE SOLID (YELLOW) REMOVABLE
- (J) 4" BROKEN (YELLOW) REMOVABLE
- (K) 4" DOT (WHITE) REMOVABLE
- (L) 4" DOUBLE SOLID (YELLOW) NON-REMOVABLE
- (M) 8" SOLID (WHITE) REMOVABLE

The seal appearing on this document was authorized by Lilah T. Ramey, P.E. 87868

Lilah Ramey 01/02/08

STATE OF TEXAS — LILAH T. RAMEY — 87868 — LICENSED — PROFESSIONAL ENGINEER

NO.	DATE	REVISION	APPROV.

PRESIDENT GEORGE BUSH TURNPIKE

NTTA
NORTH TEXAS TOLLWAY AUTHORITY

TRAFFIC CONTROL PLAN
PHASE 1A
KIRBY RD

Parsons Brinckerhoff Quade & Douglas, Inc. | LTRA | SECTION XXX

DRAWN AM DATE JAN 2008 | DESIGNED LR DATE JAN 2008
CHECKED MM DATE JAN 2008 | SCALE 1"=100'

CONTRACT NO. 02011-PGB-06-CN-EN SHEET 95 OF ___

SHEET 1 OF 2

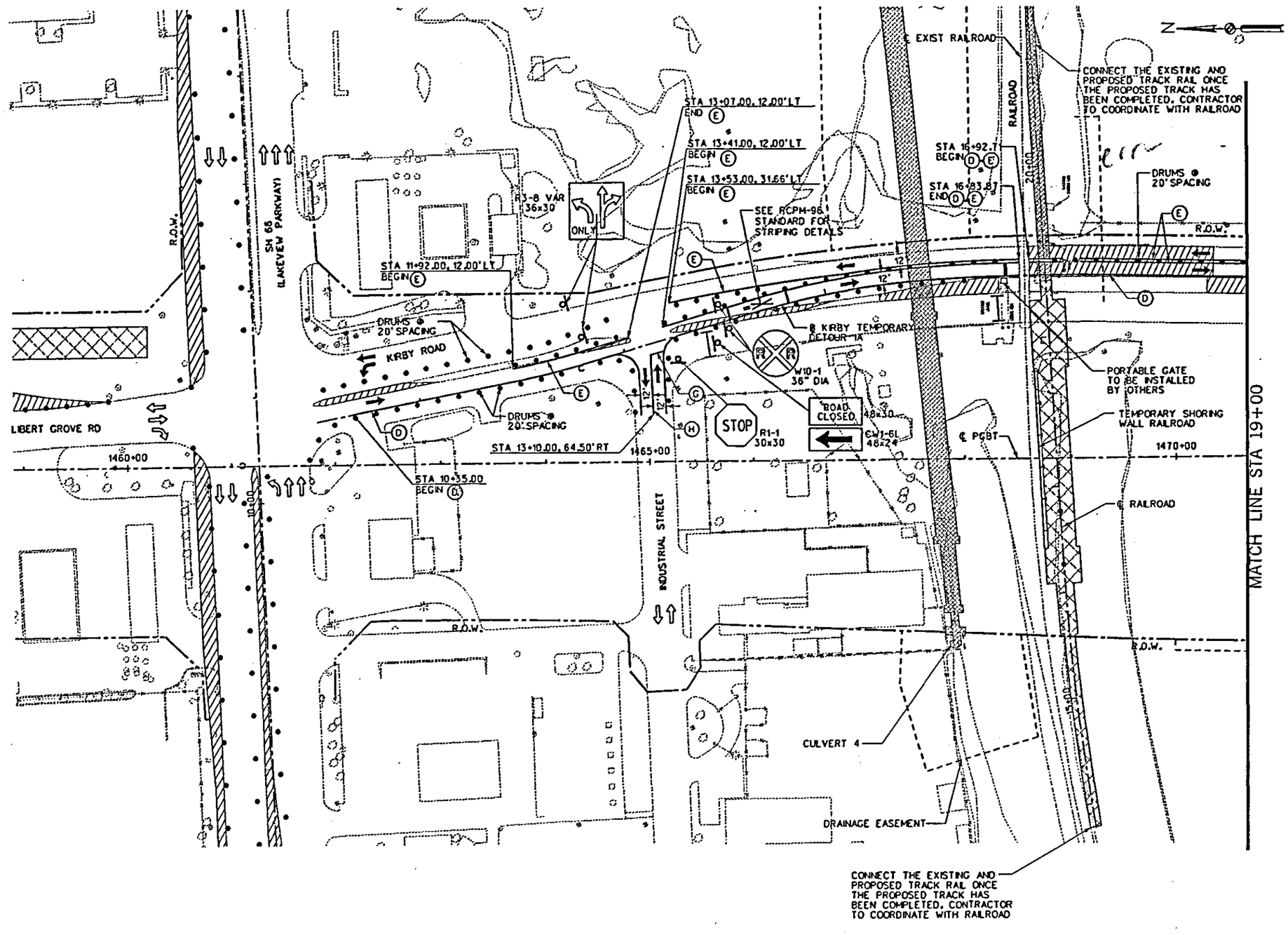

0 50 100 150 200
SCALE IN FEET

LEGEND

- CONSTRUCTION THIS PHASE
- CONSTRUCTION PREVIOUS PHASE
- BRIDGE CONSTRUCTION
- TEMPORARY PAVEMENT
- LOW PROFILE CONCRETE BARRIER (LPCB)
- PORTABLE CONC. TRAFFIC BARRIER (PCTB)
- CHANNELIZATION DEVICES
- SIGN
- TRACC
- TYPE III BARRICADE
- TEMPORARY SHORING WALL
- TRAFFIC FLOW ARROW (PROP)
- TRAFFIC FLOW ARROW (EXIST)
- (A) 4" SOLID (WHITE) NON-REMOVABLE
- (B) 4" SOLID (YELLOW) NON-REMOVABLE
- (C) 4" BROKEN (WHITE) NON-REMOVABLE
- (D) 4" SOLID (WHITE) REMOVABLE
- (E) 4" SOLID (YELLOW) REMOVABLE
- (F) 4" BROKEN (WHITE) REMOVABLE
- (G) 24" SOLID (WHITE) REMOVABLE
- (H) 4" DOUBLE SOLID (YELLOW) REMOVABLE
- (J) 4" BROKEN (YELLOW) REMOVABLE
- (K) 4" DOT (WHITE) REMOVABLE
- (L) 4" DOUBLE SOLID (YELLOW) NON-REMOVABLE
- (M) 8" SOLID (WHITE) REMOVABLE

The seal appearing on this document was authorized by Lilah T. Ramey, P.E. 87868

Lilah Ramey 01-03-08

STATE OF TEXAS — LILAH T. RAMEY — 87868 — LICENSED — PROFESSIONAL ENGINEER

NO	DATE	REVISION	APPROV.

PRESIDENT GEORGE BUSH TURNPIKE

NTTA
NORTH TEXAS TOLLWAY AUTHORITY

TRAFFIC CONTROL PLAN
PHASE 1B
KIRBY RD

Parsons Brinckerhoff Quade & Douglas, Inc. | LTRA | SECTION XXX

DRAWN AM DATE JAN 2008 | DESIGNED LR DATE JAN 2008
CHECKED MM DATE JAN 2008 | SCALE 1"=100'

CONTRACT NO. 02011-PGB-06-CN-EN SHEET 92 OF

SHEET 1 OF 2

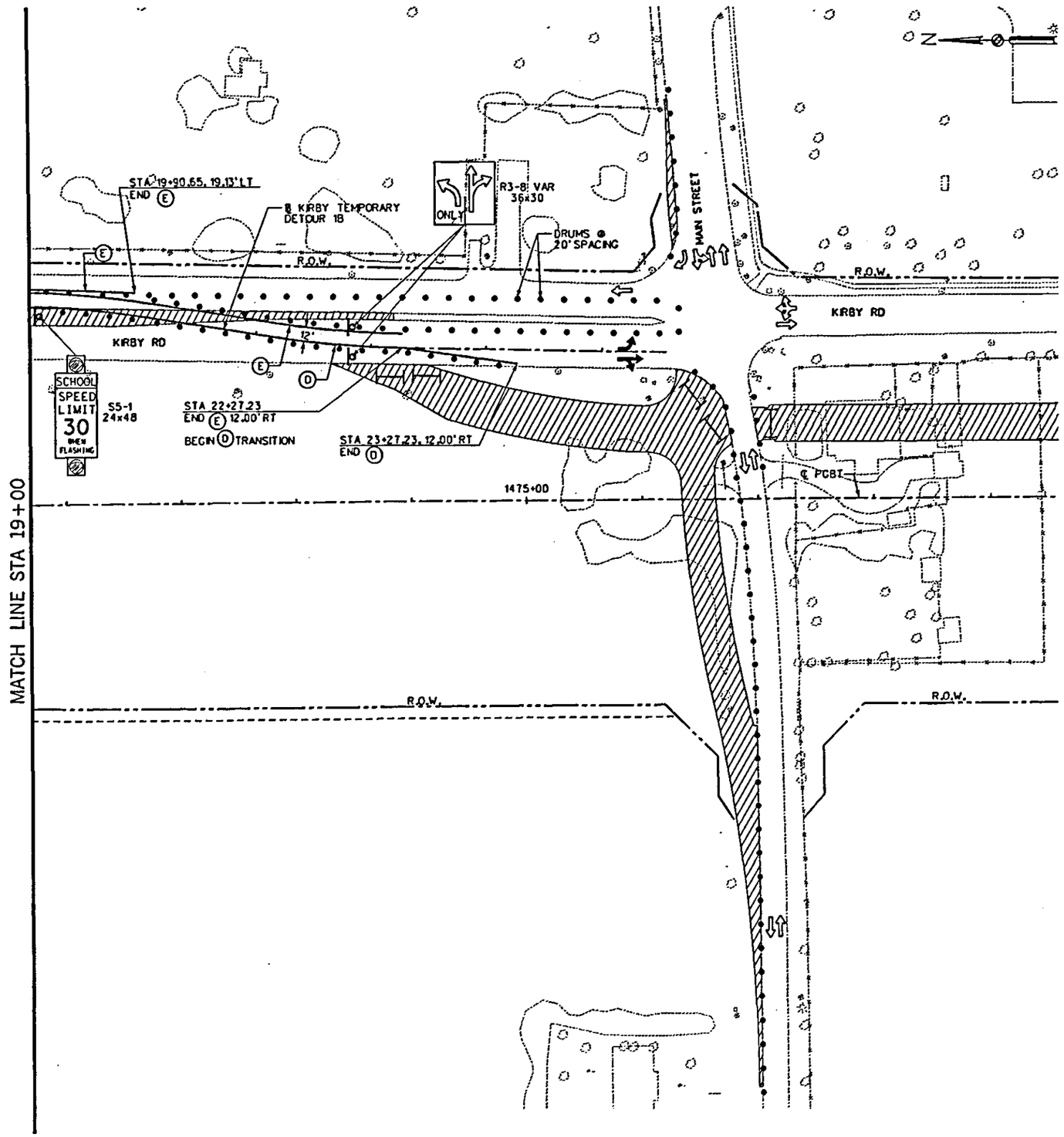

LEGEND

- CONSTRUCTION THIS PHASE
- CONSTRUCTION PREVIOUS PHASE
- BRIDGE CONSTRUCTION
- TEMPORARY PAVEMENT
- LOW PROFILE CONCRETE BARRIER (LPCB)
- PORTABLE CONC. TRAFFIC BARRIER (PCTB)
- CHANNELIZATION DEVICES
- SIGN
- TRACC
- TYPE III BARRICADE
- TEMPORARY SHORING WALL
- TRAFFIC FLOW ARROW (PROP)
- TRAFFIC FLOW ARROW (EXIST)
- (A) 4" SOLID (WHITE) NON-REMOVABLE
- (B) 4" SOLID (YELLOW) NON-REMOVABLE
- (C) 4" BROKEN (WHITE) NON-REMOVABLE
- (D) 4" SOLID (WHITE) REMOVABLE
- (E) 4" SOLID (YELLOW) REMOVABLE
- (F) 4" BROKEN (WHITE) REMOVABLE
- (G) 24" SOLID (WHITE) REMOVABLE
- (H) 4" DOUBLE SOLID (YELLOW) REMOVABLE
- (J) 4" BROKEN (YELLOW) REMOVABLE
- (K) 4" DOT (WHITE) REMOVABLE
- (L) 4" DOUBLE SOLID (YELLOW) NON-REMOVABLE
- (M) 8" SOLID (WHITE) REMOVABLE

The seal appearing on this document was authorized by Lilah T. Ramey, P.E. 87868

Lilah Ramey 01-02-08

STATE OF TEXAS
LILAH T. RAMEY
87868
LICENSED
PROFESSIONAL ENGINEER

NO	DATE	REVISION	APPROV.

PRESIDENT GEORGE BUSH TURNPIKE

NTTA
NORTH TEXAS TOLLWAY AUTHORITY

TRAFFIC CONTROL PLAN
PHASE 1B
KIRBY RD

PB Parsons Brinckerhoff Quade & Douglas, Inc. | LTRA | SECTION XXX

DRAWN AM DATE JAN 2008 | DESIGNED LR DATE JAN 2008
CHECKED MM DATE JAN 2008 | SCALE 1"=100'

CONTRACT NO. 02011-PGB-06-CN-EN SHEET 88 OF ___

SHEET 2 OF 2

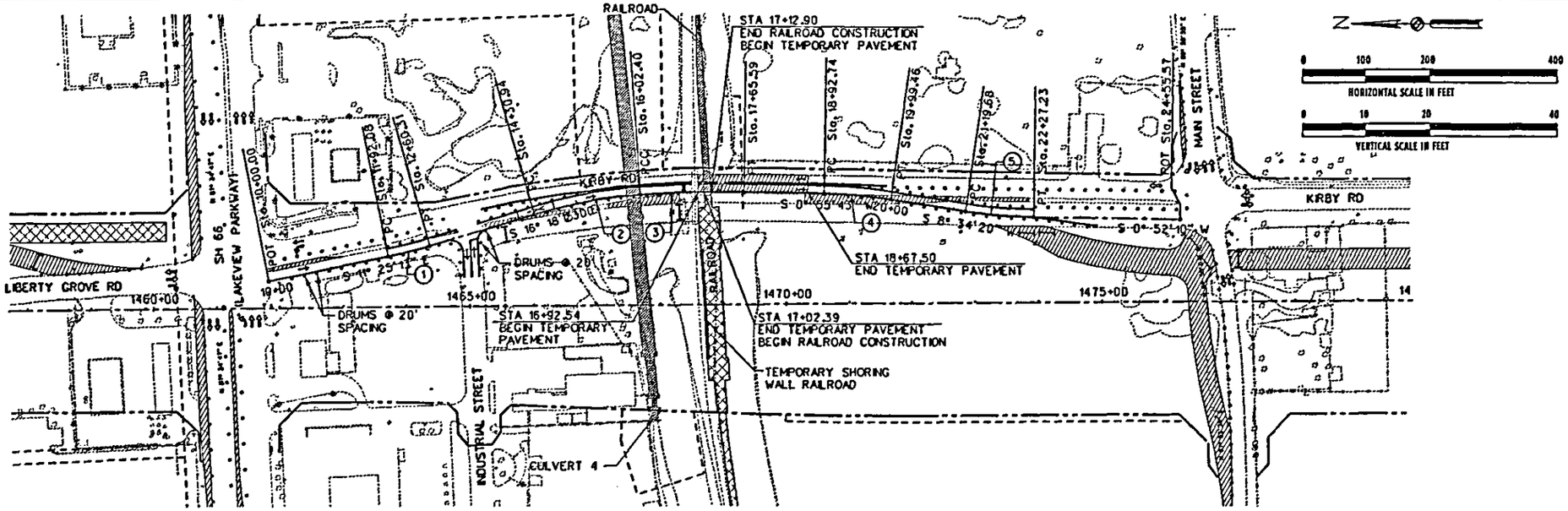

① PI STA.= 12+26.21
DELTA = 4° 53' 10.41" (LT)
D = 7° 09' 43.10"
T = 34.13'
LC = 68.20'
R = 800.00'

② PI STA.= 15+17.00
DELTA = 12° 16' 48.68" (RT)
D = 7° 09' 43.10"
T = 86.06'
LC = 171.14'
R = 800.00'

③ PI STA.= 16+84.05
DELTA = 4° 57' 17.76" (RT)
D = 3° 02' 10.83"
T = 81.54'
LC = 163.14'
R = 1,887.00'

④ PI STA.= 19+46.18
DELTA = 7° 38' 37.05" (RT)
D = 7° 09' 43.10"
T = 53.44'
LC = 106.65'
R = 800.00'

⑤ PI STA.= 21+73.53
DELTA = 7° 42' 09.85" (LT)
D = 7° 09' 43.10"
T = 53.86'
LC = 107.47'
R = 800.00'

LEGEND

- CONSTRUCTION THIS PHASE
- CONSTRUCTION PREVIOUS PHASE
- BRIDGE CONSTRUCTION
- TEMPORARY PAVEMENT
- LOW PROFILE CONCRETE BARRIER (LPCB)
- PORTABLE CONC. TRAFFIC BARRIER (PCTB)
- CHANNELIZATION DEVICES
- SIGN
- TRACC
- TYPE III BARRICADE
- TEMPORARY SHORING WALL
- TRAFFIC FLOW ARROW (PROP)
- TRAFFIC FLOW ARROW (EXIST)
- (A) 4" SOLID (WHITE) NON-REMOVABLE
- (B) 4" SOLID (YELLOW) NON-REMOVABLE
- (C) 4" BROKEN (WHITE) NON-REMOVABLE
- (D) 4" SOLID (WHITE) REMOVABLE
- (E) 4" SOLID (YELLOW) REMOVABLE
- (F) 4" BROKEN (WHITE) REMOVABLE
- (G) 24" SOLID (WHITE) REMOVABLE
- (H) 4" DOUBLE SOLID (YELLOW) REMOVABLE
- (J) 4" BROKEN (YELLOW) REMOVABLE
- (K) 4" DOT (WHITE) REMOVABLE
- (L) 4" DOUBLE SOLID (YELLOW) NON-REMOVABLE
- (M) 8" SOLID (WHITE) REMOVABLE

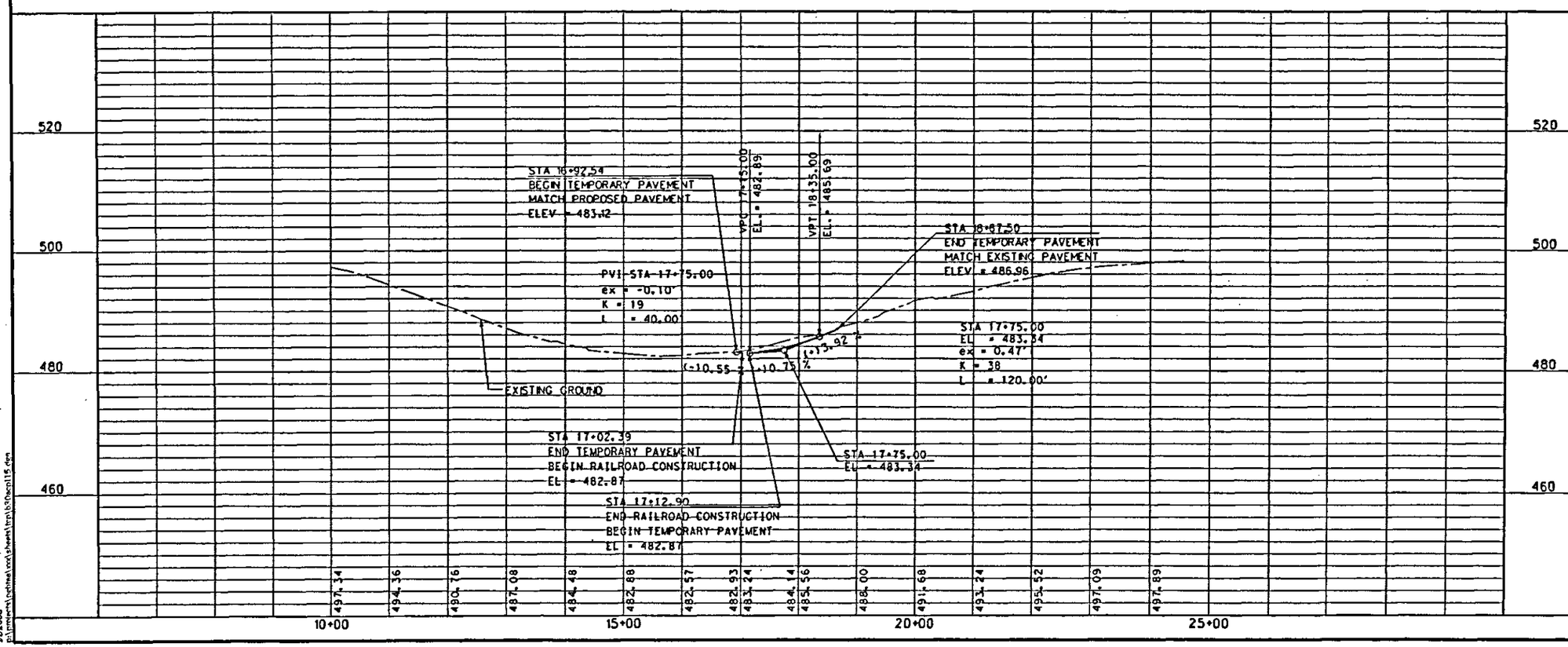

The seal appearing on this document was authorized by Lilah T. Ramey, P.E. 87868

Lilah Ramey
01-02-08

STATE OF TEXAS
LILAH T. RAMEY
87868
LICENSED
PROFESSIONAL ENGINEER

NO	DATE	REVISION	APPROV.

NTTA
NORTH TEXAS TOLLWAY AUTHORITY

TRAFFIC CONTROL PLAN
PHASE 1B
KIRBY RD TEMPORARY DETOUR

Parsons Brinckerhoff Quade & Douglas, Inc. | LTRA | SECTION XXX

DRAWN AM DATE JAN 2008 | DESIGNED LR DATE JAN 2008
CHECKED MJ DATE JAN 2008 | SCALE 1"=200'

CONTRACT NO. 02011-PGB-06-CN-EN SHEET 89 OF

4:17:47 PM

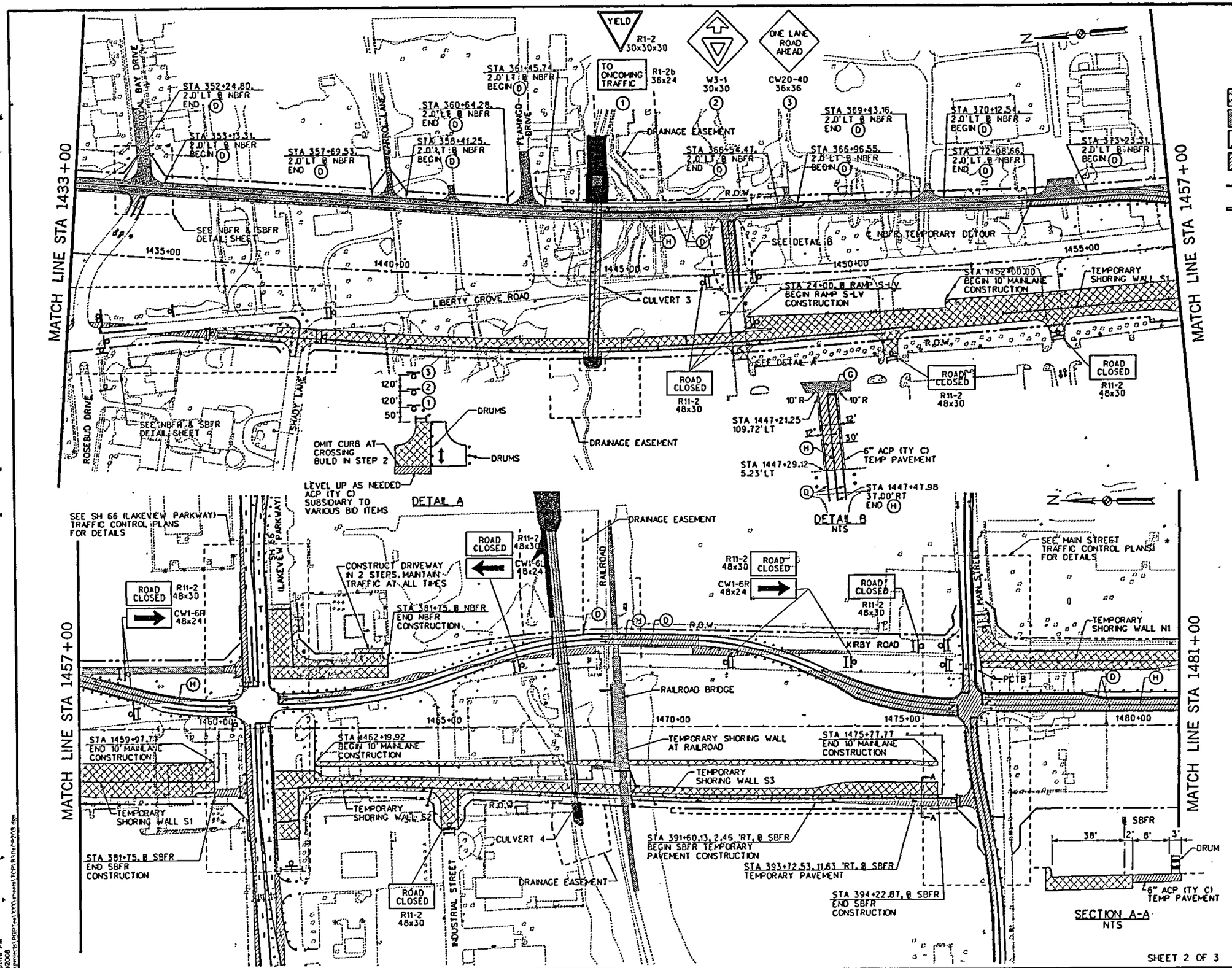

0 100 200 300 400
SCALE IN FEET

LEGEND

- CONSTRUCTION THIS PHASE
- CONSTRUCTION PREVIOUS PHASE
- BRIDGE CONSTRUCTION
- TEMPORARY PAVEMENT
- LOW PROFILE CONCRETE BARRIER (LPCB)
- PORTABLE CONC. TRAFFIC BARRIER (PCTB)
- CHANNELIZATION DEVICES
- SIGN
- TRACC
- TYPE III BARRICADE
- TEMPORARY SHORING WALL
- TRAFFIC FLOW ARROW (PROP)
- TRAFFIC FLOW ARROW (EXIST)
- (A) 4" SOLID (WHITE) NON-REMOVABLE
- (B) 4" SOLID (YELLOW) NON-REMOVABLE
- (C) 4" BROKEN (WHITE) NON-REMOVABLE
- (D) 4" SOLID (WHITE) REMOVABLE
- (E) 4" SOLID (YELLOW) REMOVABLE
- (F) 4" BROKEN (WHITE) REMOVABLE
- (G) 24" SOLID (WHITE) REMOVABLE
- (H) 4" DOUBLE SOLID (YELLOW) REMOVABLE
- (J) 4" BROKEN (YELLOW) REMOVABLE
- (K) 4" DOT (WHITE) REMOVABLE
- (L) 4" DOUBLE SOLID (YELLOW) NON-REMOVABLE
- (M) 8" SOLID (WHITE) REMOVABLE

The seal appearing on this document was authorized by Lilah T. Ramey, P.E. 87868

Lilah Ramey
01-03-08

STATE OF TEXAS
LILAH T. RAMEY
87868
LICENSED
PROFESSIONAL ENGINEER

NO.	DATE	REVISION	APPROV.

PRESIDENT GEORGE BUSH TURNPIKE

NTTA
NORTH TEXAS TOLLWAY AUTHORITY

TRAFFIC CONTROL PLAN
PHASE 2
STA 1433+00 TO STA 1481+00

Parsons Brinckerhoff Quade & Douglas, Inc.

LTRA

SECTION XXX

DRAWN AM DATE JAN 2008 DESIGNED LR DATE JAN 2008
CHECKED MM DATE JAN 2008 SCALE 1"=200'

CONTRACT NO. 02011-PGB-06-CN-EN SHEET 101 OF ___

4:01:16 PM
1/3/2008
p:\projects\PGBTP\all\YYY\sheets\TCP\R310\CP203.dgn

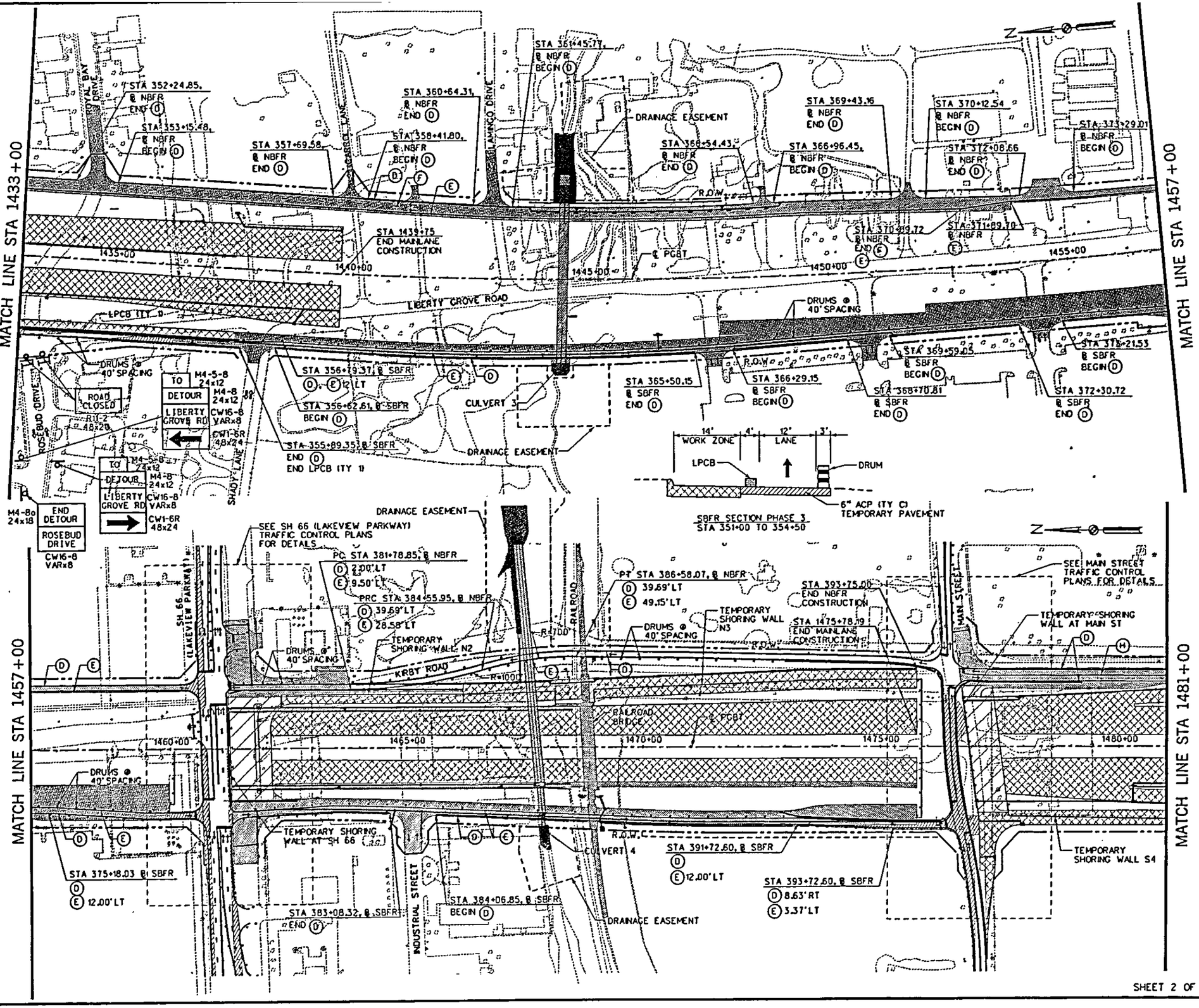

SHEET 2 OF 3

0 100 200 300 400
SCALE IN FEET

LEGEND

- CONSTRUCTION THIS PHASE
- CONSTRUCTION PREVIOUS PHASE
- BRIDGE CONSTRUCTION
- TEMPORARY PAVEMENT
- LOW PROFILE CONCRETE BARRIER (LPCB)
- PORTABLE CONC. TRAFFIC BARRIER (PCTB)
- CHANNELIZATION DEVICES
- SIGN
- TRACC
- TYPE III BARRICADE
- TEMPORARY SHORING WALL
- TRAFFIC FLOW ARROW (PROP)
- TRAFFIC FLOW ARROW (EXIST)
- (A) 4" SOLID (WHITE) NON-REMOVABLE
- (B) 4" SOLID (YELLOW) NON-REMOVABLE
- (C) 4" BROKEN (WHITE) NON-REMOVABLE
- (D) 4" SOLID (WHITE) REMOVABLE
- (E) 4" SOLID (YELLOW) REMOVABLE
- (F) 4" BRO[illegible] REMOVABLE
- (G) 24" SOLID (WHITE) REMOVABLE
- (H) 4" DOUBLE SOLID (YELLOW) REMOVABLE
- (J) 4" BROKEN (YELLOW) REMOVABLE
- (K) 4" DOT (WHITE) REMOVABLE
- (L) 4" DOUBLE SOLID (YELLOW) NON-REMOVABLE
- (M) 8" SOLID (WHITE) REMOVABLE

The seal appearing on this document was authorized by Lilah T. Ramey, P.E. 87868

Lilah Ramey 01-02-08

STATE OF TEXAS LILAH T. RAMEY 87868 LICENSED PROFESSIONAL ENGINEER

NO	DATE	REVISION	APPROV.

PRESIDENT GEORGE BUSH TURNPIKE

NTTA NORTH TEXAS TOLLWAY AUTHORITY

TRAFFIC CONTROL PLAN PHASE 3

STA 1433+00 TO STA 1481+00

Parsons Brinckerhoff Quade & Douglas, Inc. | LTRA | SECTION XXX

DRAWN AM DATE JAN 2008 | DESIGNED LR DATE JAN 2008
CHECKED MM DATE JAN 2008 | SCALE 1"=200'

CONTRACT NO. 02011-PGB-06-CN-EN SHEET 15 OF ___

5:52:12 PM

p:\projects\pgbtee\xxx\sheets\tcp\b30ocp403.dgn

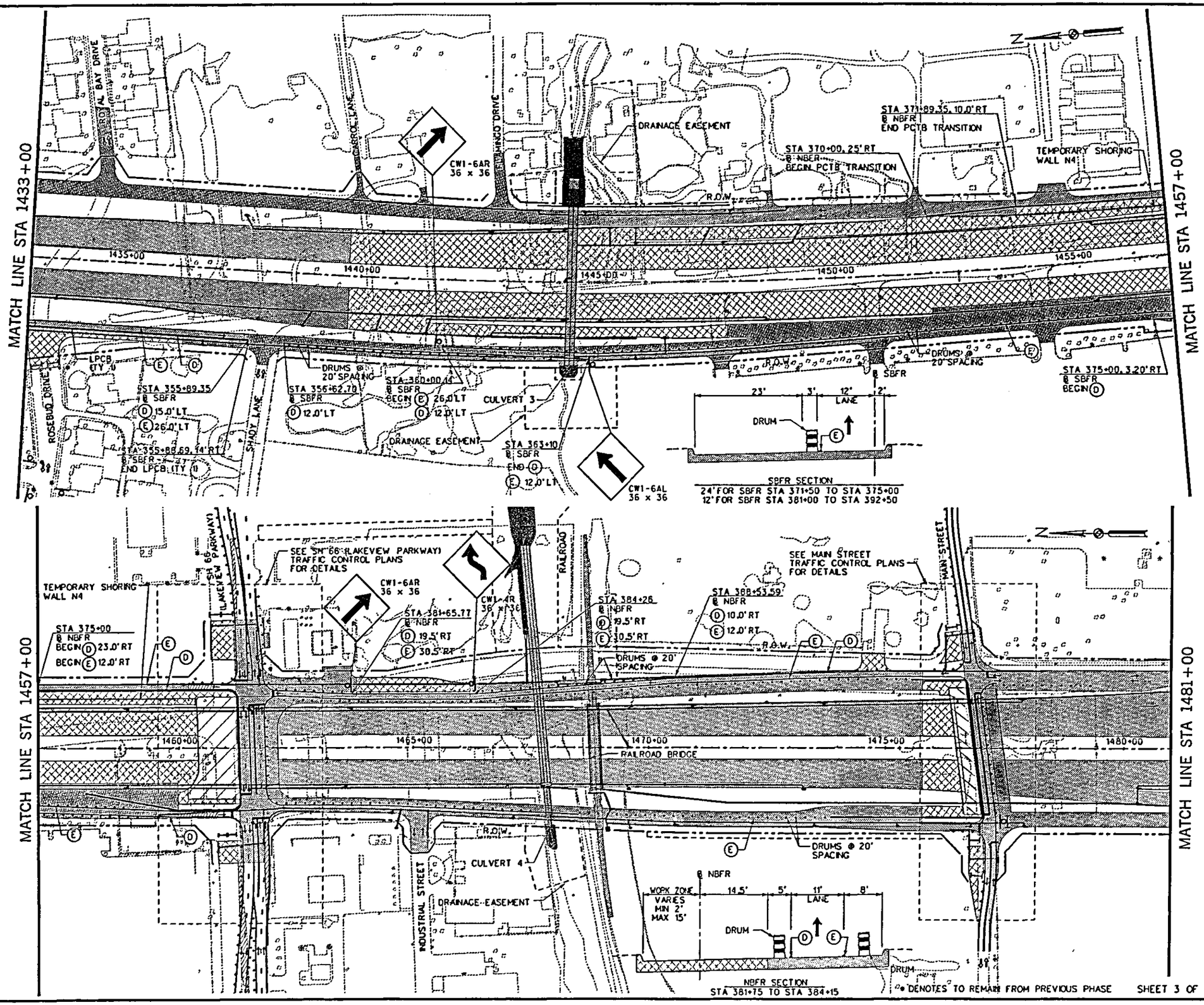

0 100 200 300 400
SCALE IN FEET

LEGEND

- CONSTRUCTION THIS PHASE
- CONSTRUCTION PREVIOUS PHASE
- BRIDGE CONSTRUCTION
- TEMPORARY PAVEMENT
- LOW PROFILE CONCRETE BARRIER (LPCB)
- PORTABLE CONC. TRAFFIC BARRIER (PCTB)
- CHANNELIZATION DEVICES
- SIGN
- TRACC
- TYPE III BARRICADE
- TEMPORARY SHORING WALL
- TRAFFIC FLOW ARROW (PROP)
- TRAFFIC FLOW ARROW (EXIST)
- (A) 4" SOLID (WHITE) NON-REMOVABLE
- (B) 4" SOLID (YELLOW) NON-REMOVABLE
- (C) 4" BROKEN (WHITE) NON-REMOVABLE
- (D) 4" SOLID (WHITE) REMOVABLE
- (E) 4" SOLID (YELLOW) REMOVABLE
- (F) 4" BROKEN (WHITE) REMOVABLE
- (G) 24" SOLID (WHITE) REMOVABLE
- (H) 4" DOUBLE SOLID (YELLOW) REMOVABLE
- (J) 4" BROKEN (YELLOW) REMOVABLE
- (K) 4" DOT (WHITE) REMOVABLE
- (L) 4" DOUBLE SOLID (YELLOW) NON-REMOVABLE
- (M) 8" SOLID (WHITE) REMOVABLE

The seal appearing on this document was authorized by Lilah T. Ramey, P.E. 87868

Lilah Ramey
01-02-08

STATE OF TEXAS
LILAH T. RAMEY
87868
LICENSED
PROFESSIONAL ENGINEER

NO.	DATE	REVISION	APPROV.

PRESIDENT GEORGE BUSH TURNPIKE

NTTA
NORTH TEXAS TOLLWAY AUTHORITY

TRAFFIC CONTROL PLAN
PHASE 4
STA 1433+00 TO STA 1481+00

Parsons Brinckerhoff Quade & Douglas, Inc. | LRA | SECTION XXX

DRAWN AM DATE JAN 2008 | DESIGNED LR DATE JAN 2008
CHECKED MM DATE JAN 2008 | SCALE 1"=200'

CONTRACT NO. 02011-PGB-06-CN-EN SHEET 122 OF ___

SHEET 3 OF 4

5:31:52 PM

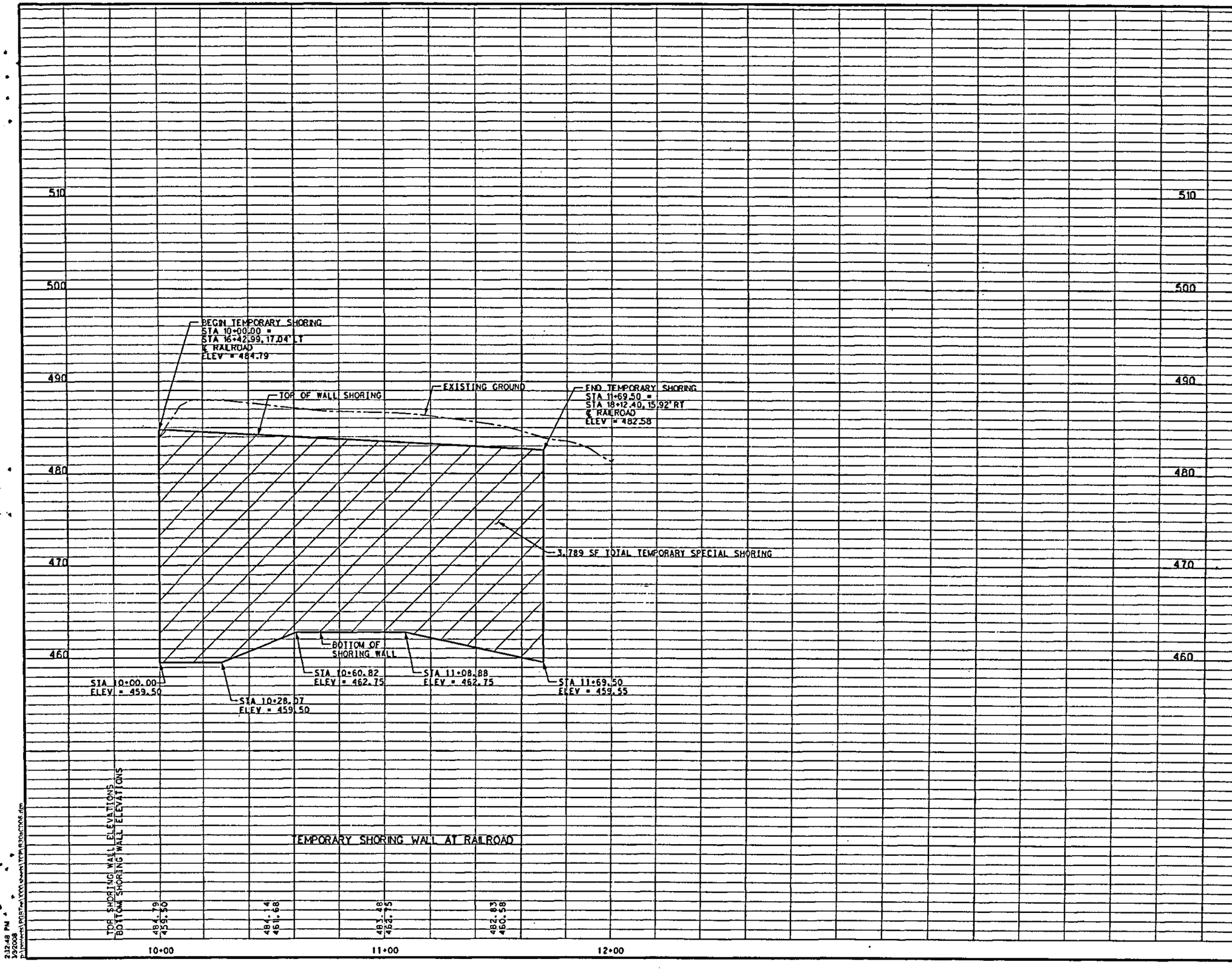

0 20 40 60 80
SCALE IN FEET

NOTE:

1. TEMPORARY SHORING WALL ALIGNMENTS CORRELATE TO PERTINENT WALL ALIGNMENTS. A MAXIMUM STRAP LENGTH OF WALL HEIGHT WAS USED.

The seal appearing on this document was authorized by Lilah T. Ramey, P.E. 87868

Lilah Ramey
01-03-08

STATE OF TEXAS
LILAH T. RAMEY
87868
LICENSED
PROFESSIONAL ENGINEER

PRESIDENT GEORGE BUSH TURNPIKE

NTTA
NORTH TEXAS TOLLWAY AUTHORITY

TRAFFIC CONTROL PLAN
TEMPORARY SHORING
PHASE 1B
RAILROAD

Parsons Brinckerhoff Quade & Douglas, Inc. | LTRA | SECTION XXX

DRAWN AM DATE JAN 2008 | DESIGNED LR DATE JAN 2008
CHECKED LM DATE JAN 2008 | SCALE

CONTRACT NO. 02011-PGB-06-CN-EN SHEET 137 OF

2:12:47 PM

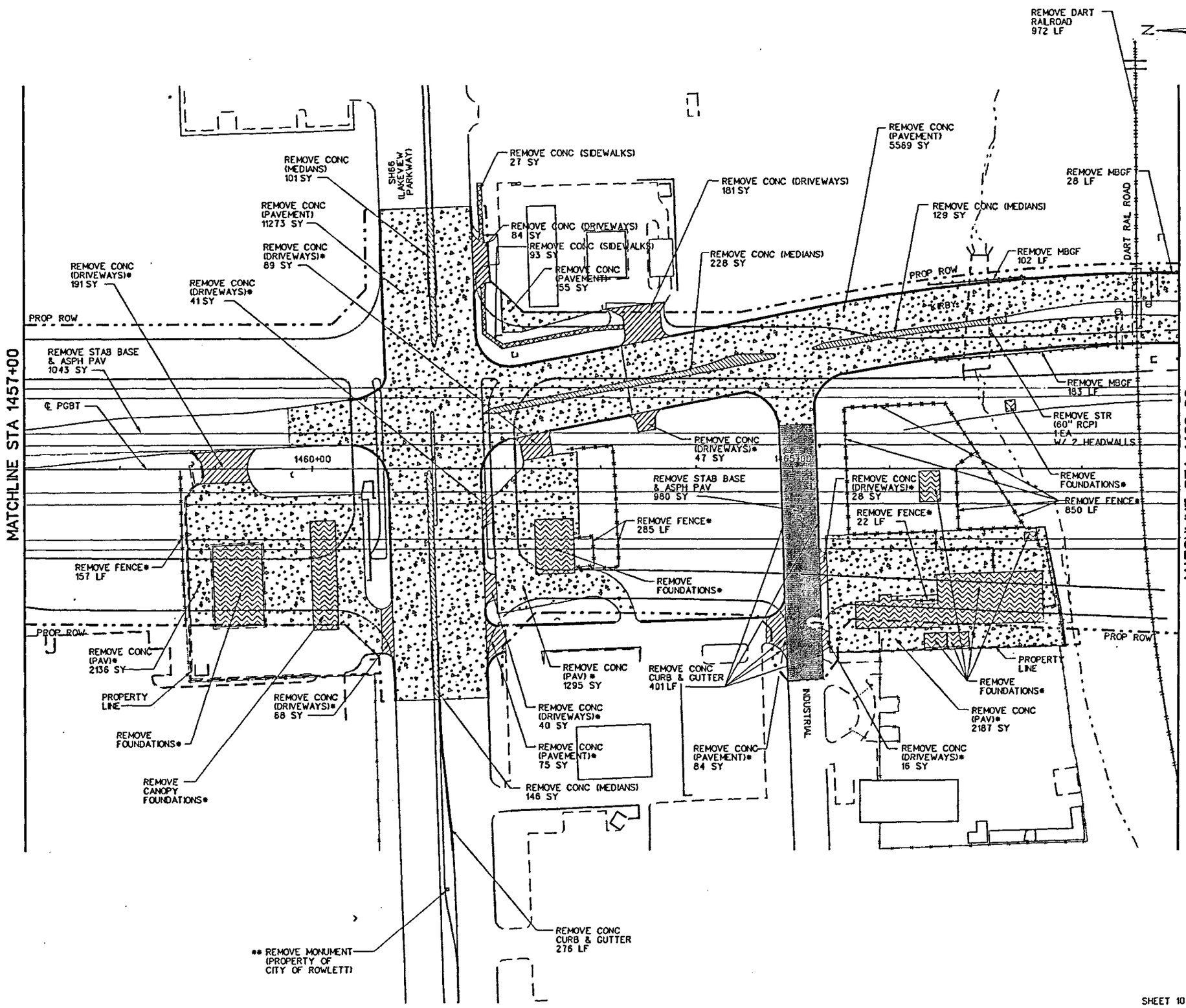

LEGEND

- REMOVE STAB BASE & ASPH PAV
- REMOVE CONC (PAV)
- REMOVE CONC (MEDIANS)
- REMOVE CONC (SIDEWALKS)
- REMOVE CONC (DRIVEWAYS)
- REMOVE FOUNDATIONS*
- REMOVE CONC (CURB & GUTTER)
- REMOVE METAL BEAM GUARD FENCE
- REMOVE FENCE*
- REMOVE DART RAIL ROAD

NOTE:

* HOUSES AND STRUCTURES AND THEIR FOUNDATIONS ARE TO BE REMOVED BY OTHERS, UNLESS SHOWN OTHERWISE.

** CONTRACTOR SHALL EXERCISE REASONABLE CARE TO DISASSEMBLE MONUMENT. REMOVE AND RETURN TO CITY OF ROWLETT. RETURN TO:
SHAWN PAUL
4310 INDUSTRIAL
ROWLETT, TX. 75088
972.463.3910

STATE OF TEXAS
JAMES REISER
67287
REGISTERED PROFESSIONAL ENGINEER
1-3-08
James Reiser

NO.	DATE	REVISION	APPROV.

PRESIDENT GEORGE BUSH TURNPIKE

NTTA
NORTH TEXAS TOLLWAY AUTHORITY

REMOVAL PLAN
MAIN LANES
STA 1457+00 TO 1469+00

Parsons Brinckerhoff Quade & Douglas, Inc.
4777 Stemmons Freeway
Suite 633
Dallas, TX 75207

SECTION XXX

DRAWN CPS DATE 12-31-07 DESIGNED JR DATE 12-31-07
CHECKED JR DATE 12-31-07 SCALE 1"=100'

CONTRACT NO. 02011-PGB-06-CN-EN SHEET 199

SHEET 10 OF 13

Plotted by caster
Plotted 03-JAN-2008 18:02
DGN=gi\jobs\22474-PGBT\Sheets\Removals\B30dRP10.dgn, ON=[1-62, 64]

0 50 100 150 200
HORIZONTAL SCALE IN FEET

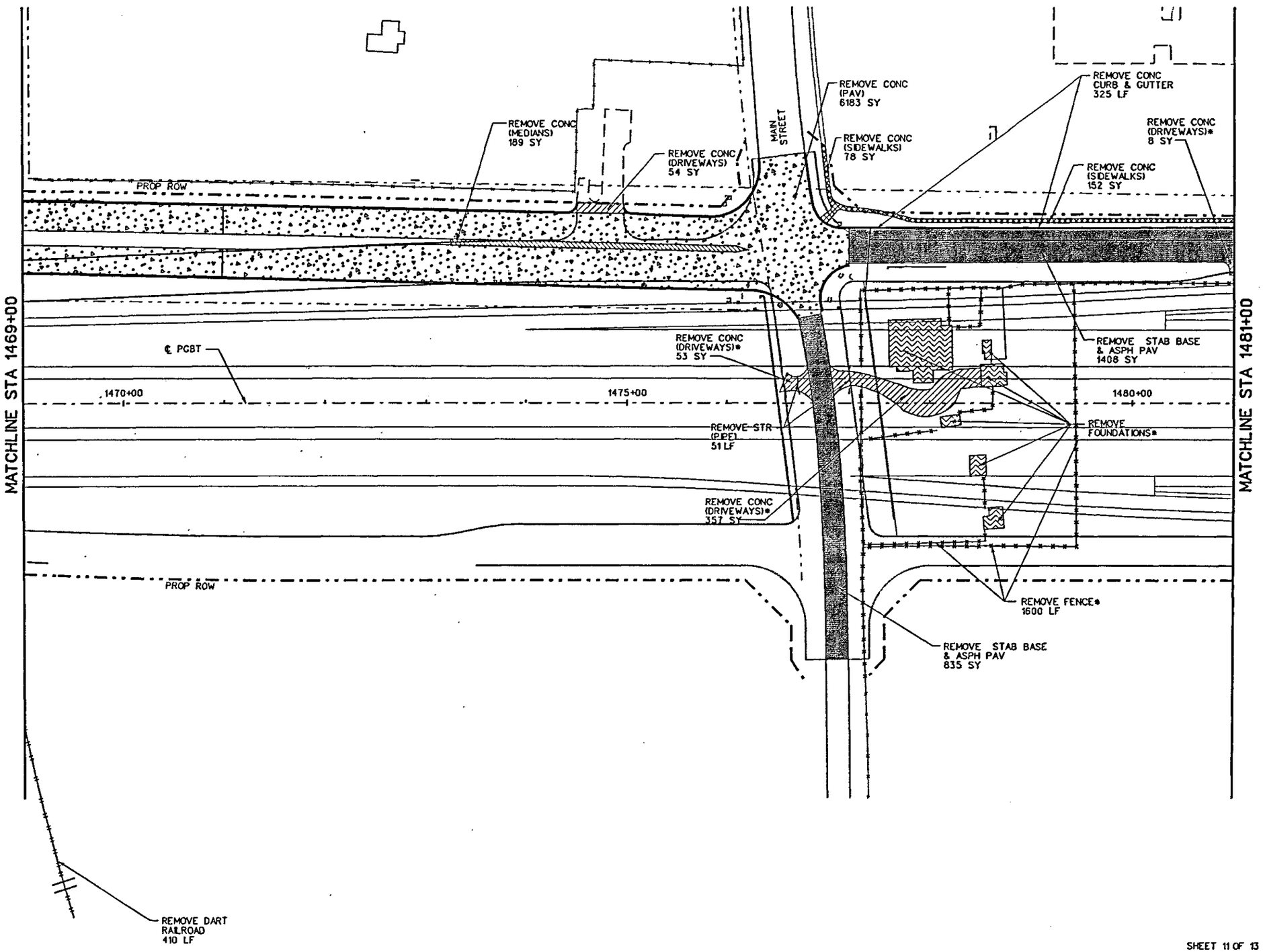

LEGEND

- REMOVE STAB BASE & ASPH PAV
- REMOVE CONC (PAV)
- REMOVE CONC (MEDIANS)
- REMOVE CONC (SIDEWALKS)
- REMOVE CONC (DRIVEWAYS)
- REMOVE FOUNDATIONS*
- REMOVE CONC (CURB & GUTTER)
- REMOVE METAL BEAM GUARD FENCE
- REMOVE FENCE*
- REMOVE DART RAIL ROAD

NOTE:

* HOUSES AND STRUCTURES AND THEIR FOUNDATIONS ARE TO BE REMOVED BY OTHERS, UNLESS SHOWN OTHERWISE.

STATE OF TEXAS
JAMES REISER
67287
REGISTERED PROFESSIONAL ENGINEER

1-3-'08
James Reiser

NO.	DATE	REVISION	APPROV.

PRESIDENT GEORGE BUSH TURNPIKE

NTTA
NORTH TEXAS TOLLWAY AUTHORITY

REMOVAL PLAN
MAIN LANES
STA 1469+00 TO 1481+00

PB Parsons Brinckerhoff Quade & Douglas, Inc.
2777 Stemmons Freeway
Suite 833
Dallas, TX 75207

SECTION XXX

DRAWN CPS DATE 12-31-07
CHECKED JR DATE 12-31-07
DESIGNED JR DATE 12-31-07
SCALE 1"=100'

CONTRACT NO. 02011-PGB-06-CN-EN SHEET 200

SHEET 11 OF 13

Plotted By cdspar
Plotted 03-JAN-2008 17:59
DGN=g:\jobs\22474-PGBT\Sheets\Removals\B30dRP11.dgn, ON=(1-62, 64)

0 100 200 300 400
HORIZONTAL SCALE IN FEET

LEGEND

XXXXXXXXXX	CURVE NAME & NUMBER
BEGIN XXX	BEGIN POINT
END XXX	END POINT
CP #XXX	CONTROL POINT NUMBER
△	CONTROL POINT SYMBOL

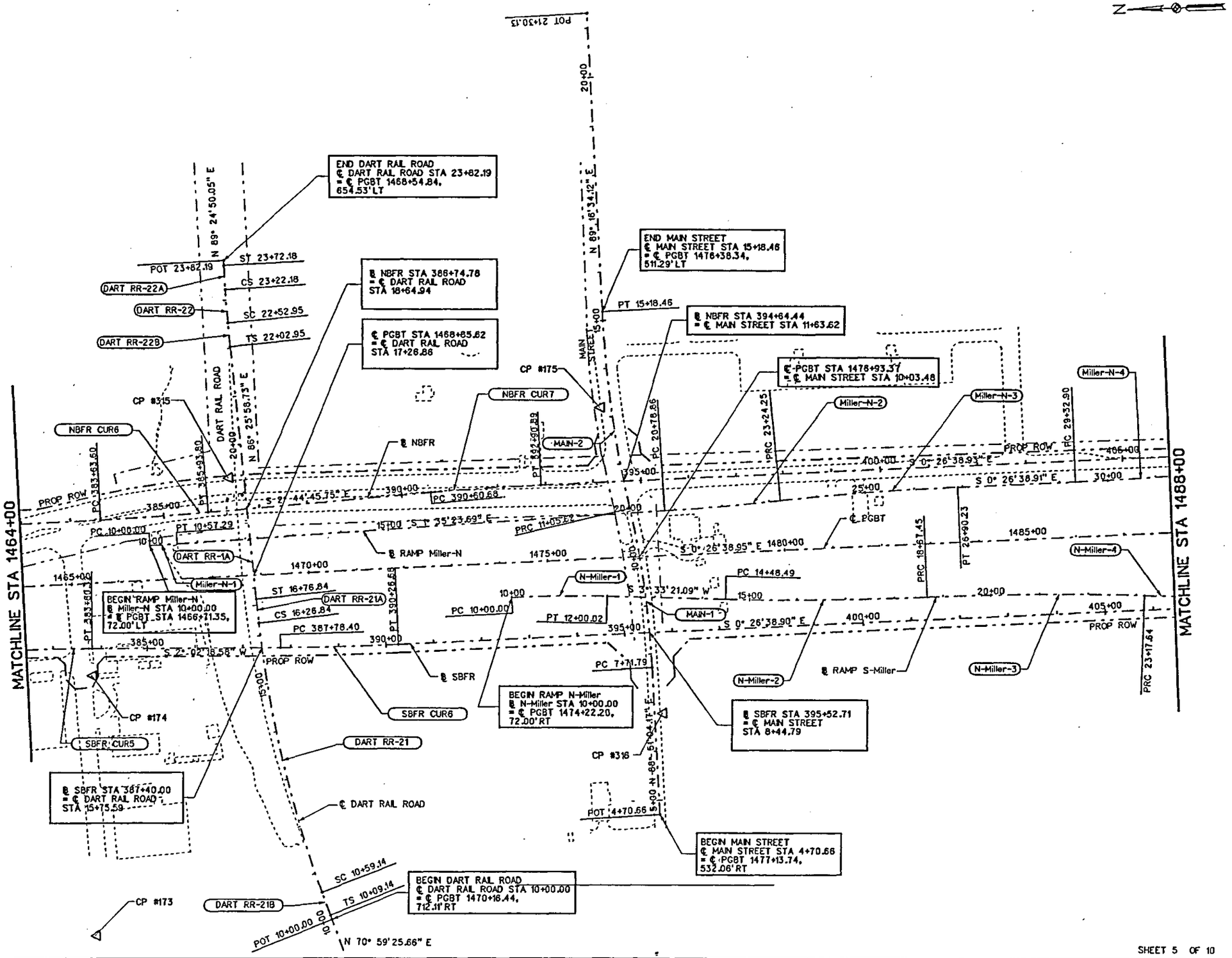

James W. Dostin P.E.
1/3/08

STATE OF TEXAS
JAMES W. DOSTIN
85435
REGISTERED
PROFESSIONAL ENGINEER

NO.	DATE	REVISION	APPROV.

PRESIDENT GEORGE BUSH TURNPIKE

NTTA
NORTH TEXAS TOLLWAY AUTHORITY

GEOMETRIC LAYOUT

STA 1460+00 TO STA 1488+00

Parsons Brinckerhoff Quade & Douglas, Inc.
2777 Stemmons Freeway
Suite 833
Dallas, TX 75207

SECTION XXX

DRAWN JMD DATE 12-31-07 DESIGNED JMD DATE 12-31-07
CHECKED JMD DATE 12-31-07 SCALE 1"=200'

CONTRACT NO. 02011-PGB-06-CN-EN SHEET 207

SHEET 5 OF 10

Plotted By oasper
Plotted 03-JAN-2008 19:57
DGN=gi\jobs\22474-PGBT\Sheets\Paving\B30aHL05.dgn, ON=(1-62, 64)
Plotted 03-JAN-2008 19:57

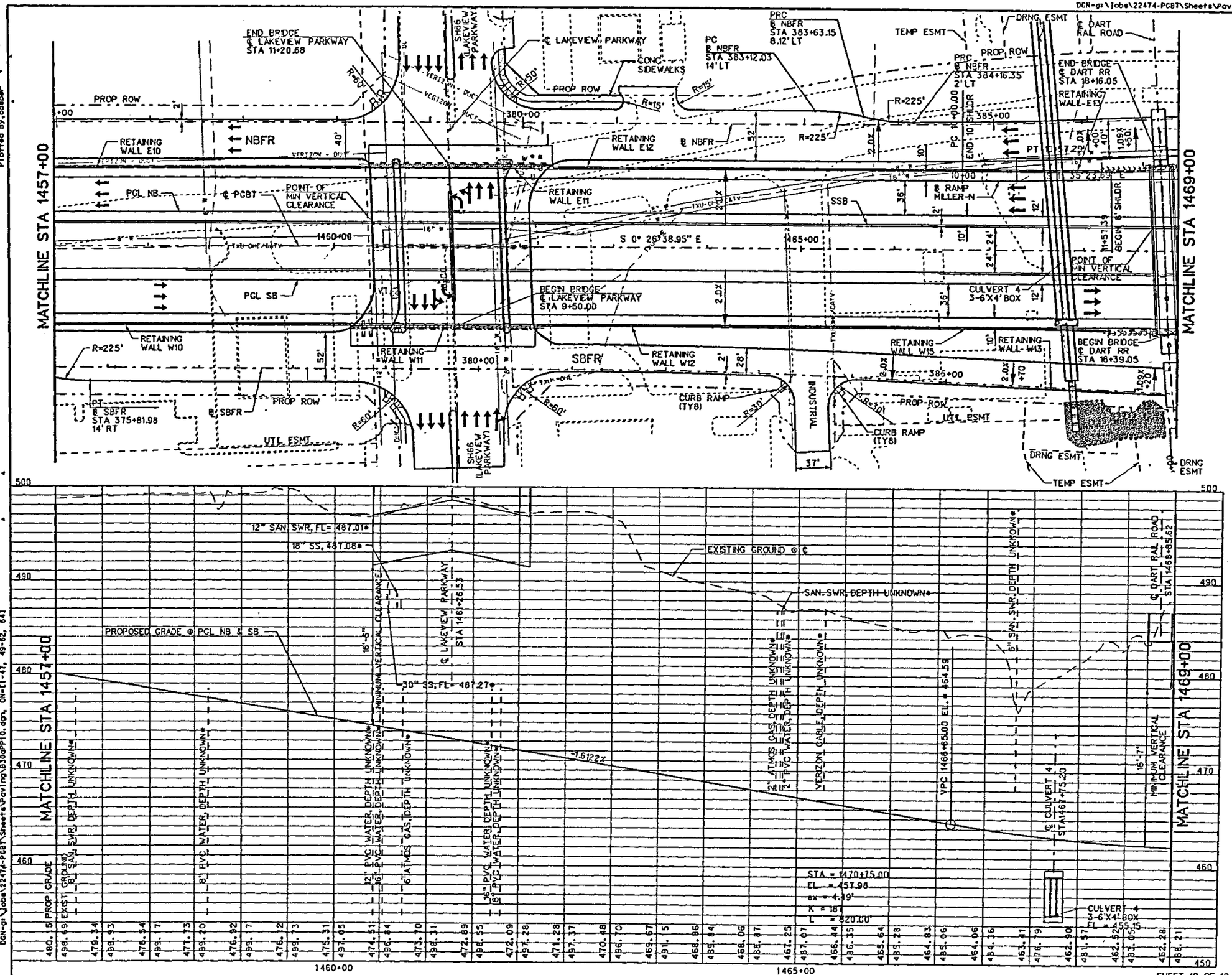

0 50 100 150 200
HORIZONTAL SCALE IN FEET

0 5 10 15 20
VERTICAL SCALE IN FEET

N

LEGEND

- RETAINING WALL
- SOUND WALL
- METAL BEAM GUARD FENCE
- TRAFFIC DIRECTION

* UTILITY TO BE ABANDONED & RELOCATED BY OTHERS

STATE OF TEXAS
JAMES REISER
61287
REGISTERED PROFESSIONAL ENGINEER

1-3-'08

James Reiser

NO.	DATE	REVISION	APPROV.

PRESIDENT GEORGE BUSH TURNPIKE

NTTA
NORTH TEXAS TOLLWAY AUTHORITY

PLAN & PROFILE
MAIN LANES
STA 1457+00 TO 1469+00

Parsons Brinckerhoff Quade & Douglas, Inc.
2777 Stemmons Freeway
Suite 1133
Dallas, TX 75207

SECTION XXX

DRAWN CPS DATE 12-31-07
CHECKED JR DATE 12-31-07
DESIGNED JR DATE 12-31-07
SCALE 1"=100'

CONTRACT NO. 02011-PGB-06-CN-EN SHEET 224

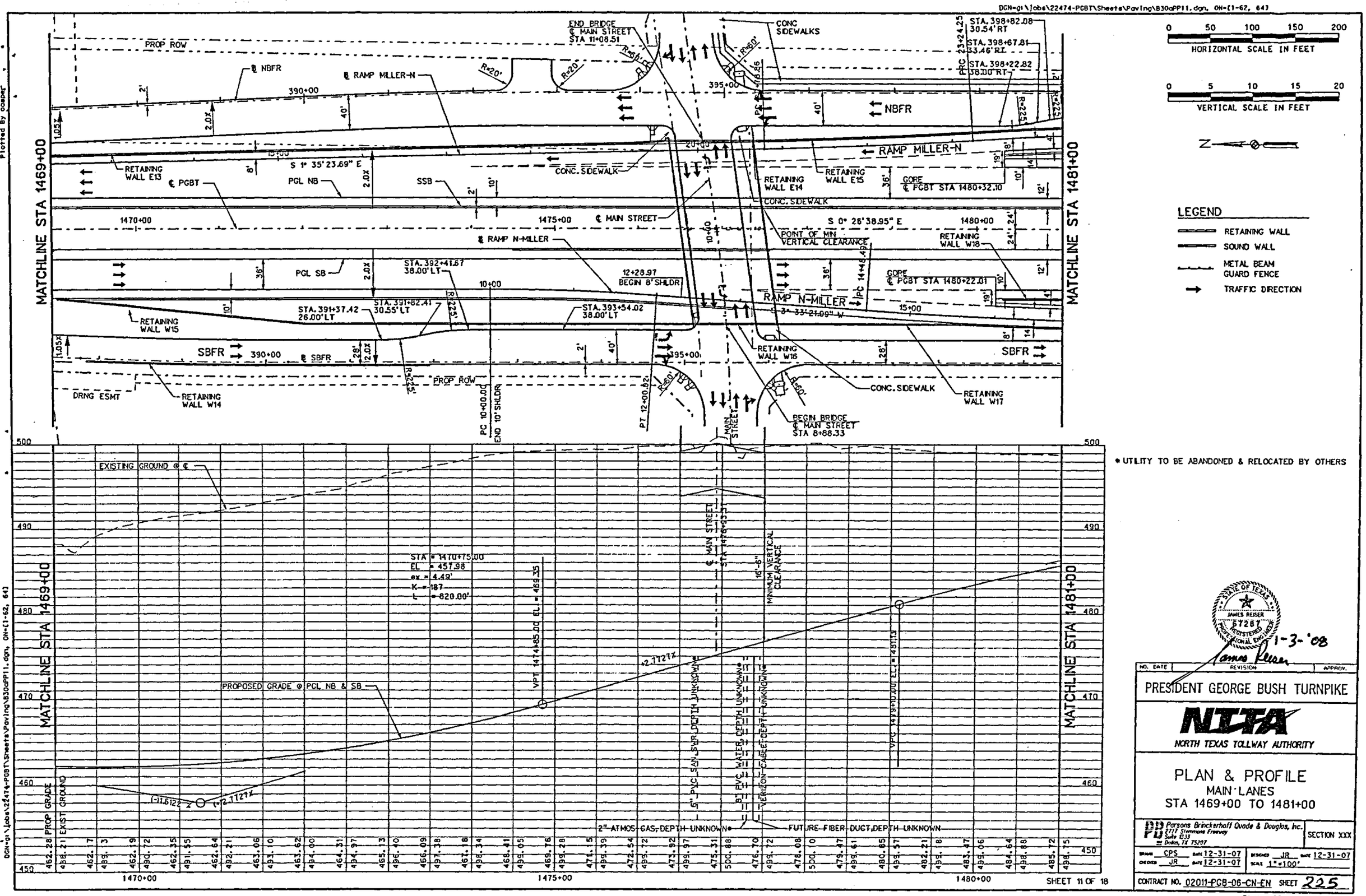

* UTILITY TO BE ABANDONED & RELOCATED BY OTHERS

STATE OF TEXAS
JAMES RESER
67281
REGISTERED PROFESSIONAL ENGINEER
1-3-'08

NO.	DATE	REVISION	APPROV.

PRESIDENT GEORGE BUSH TURNPIKE

NTTA
NORTH TEXAS TOLLWAY AUTHORITY

PLAN & PROFILE
MAIN LANES
STA 1469+00 TO 1481+00

Parsons Brinckerhoff Quade & Douglas, Inc.
2717 Stemmons Freeway
Suite 833
Dallas, TX 75207

SECTION XXX

DRAWN CPS DATE 12-31-07 DESIGNED JR DATE 12-31-07
CHECKED JR DATE 12-31-07 SCALE 1"=100'

CONTRACT NO. 02011-PGB-06-CN-EN SHEET 225

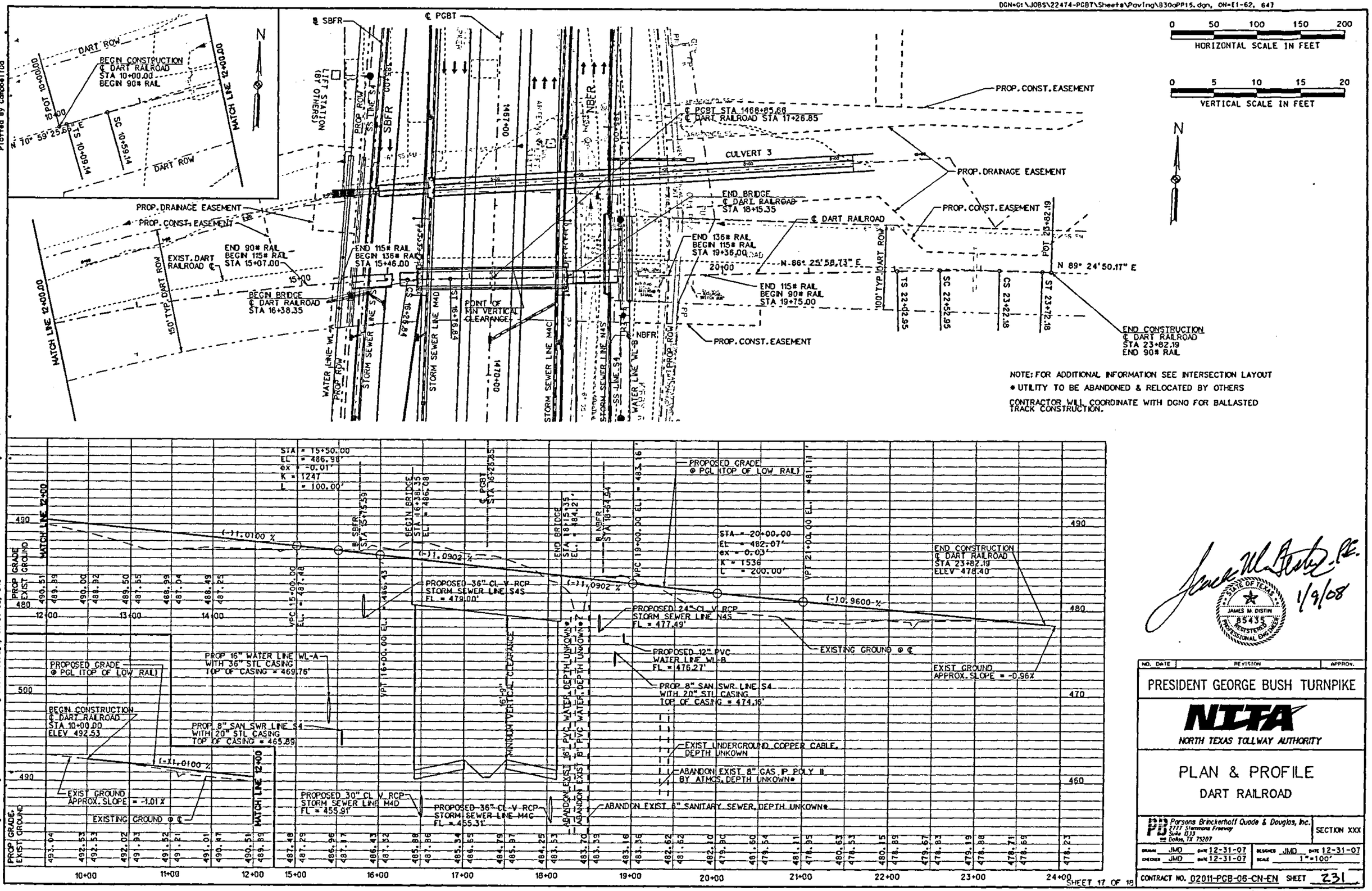

Plotted By Cambell0a

Plotted 09-JAN-2008 11:14
DGN=G:\JOBS\22474-PGBT\Sheets\Paving\B30aPP15.dgn, ON=(1-62, 64)

JAMES M. DISTIN
85435
REGISTERED PROFESSIONAL ENGINEER
STATE OF TEXAS
1/9/08

NO.	DATE	REVISION	APPROV.

PRESIDENT GEORGE BUSH TURNPIKE

NTTA
NORTH TEXAS TOLLWAY AUTHORITY

PLAN & PROFILE
DART RAILROAD

Parsons Brinckerhoff Quade & Douglas, Inc.
2777 Stemmons Freeway
Suite 833
Dallas, TX 75207

SECTION XXX

DRAWN JMD DATE 12-31-07 DESIGNED JMD DATE 12-31-07
CHECKED JMD DATE 12-31-07 SCALE 1"=100'

CONTRACT NO. 02011-PGB-06-CN-EN SHEET 231

SHEET 17 OF 18

Plotted 09-JAN-2008 11:14

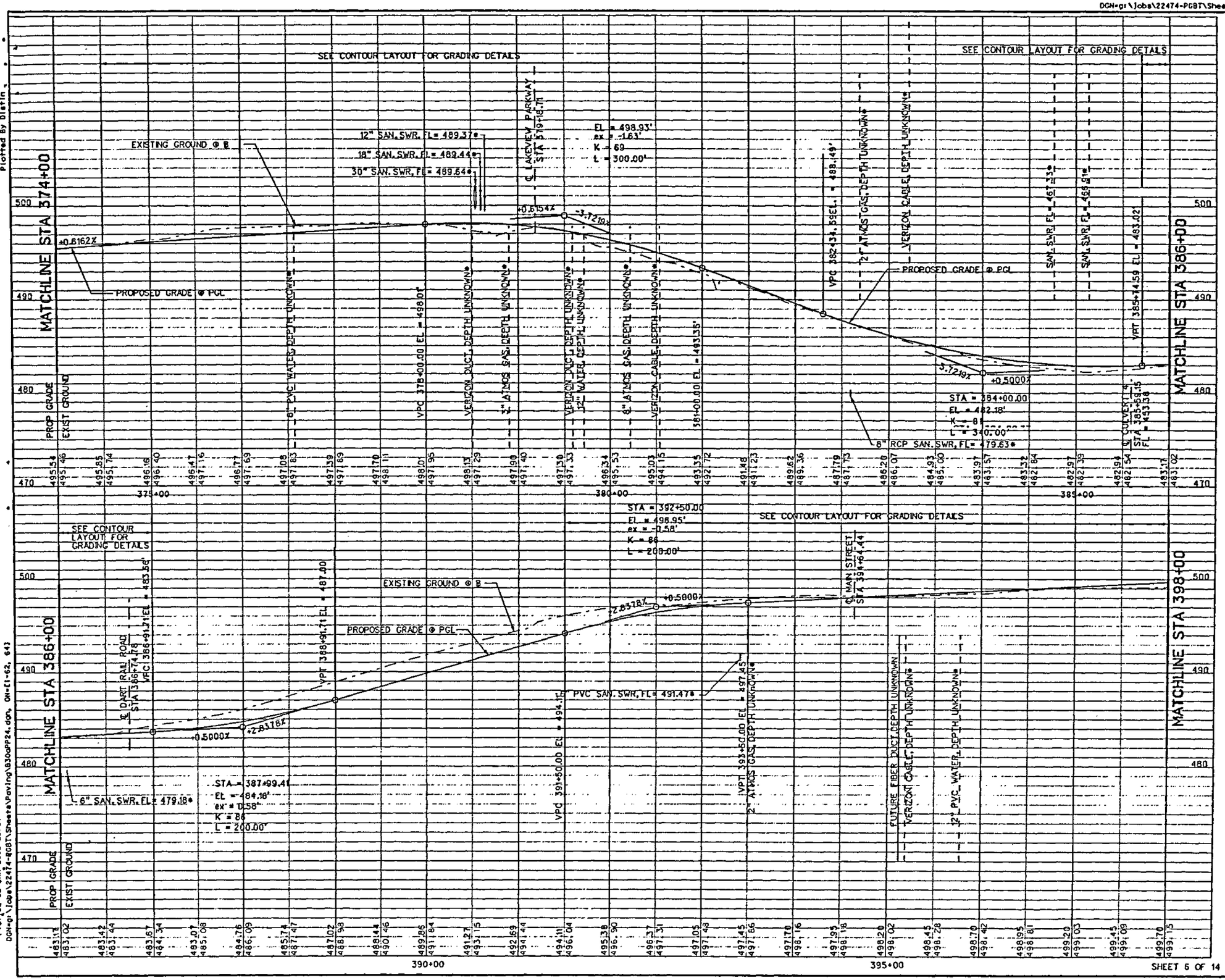

0 50 100 150 200
HORIZONTAL SCALE IN FEET

0 5 10 15 20
VERTICAL SCALE IN FEET

* UTILITY TO BE ABANDONED & RELOCATED BY OTHERS

STATE OF TEXAS
JAMES REISER
67287
REGISTERED PROFESSIONAL ENGINEER
1-3-'08

NO.	DATE	REVISION	APPROV.

PRESIDENT GEORGE BUSH TURNPIKE

NTTA
NORTH TEXAS TOLLWAY AUTHORITY

FRONTAGE ROAD PROFILE
NORTH BOUND FRONTAGE ROAD
STA 374+00 TO 398+00

PB Parsons Brinckerhoff Quade & Douglas, Inc.
2777 Stemmons Freeway
Suite 1017
Dallas, TX 75207

SECTION XXX

DRAWN CPS DATE 12-31-07 DESIGNED JR DATE 12-31-07
CHECKED JR DATE 12-31-07 SCALE 1"=100'

CONTRACT NO. 02011-PGB-06-CN-EN SHEET 246

SHEET 6 OF 14

Plotted 03-JAN-2008 23:37

Plotted By Distin

Plotted 03-JAN-2008 23:37
DGN=gi\Jobs\22474-PGBT\Sheets\Paving\830aPP24.dgn, ON=[1-62, 643]

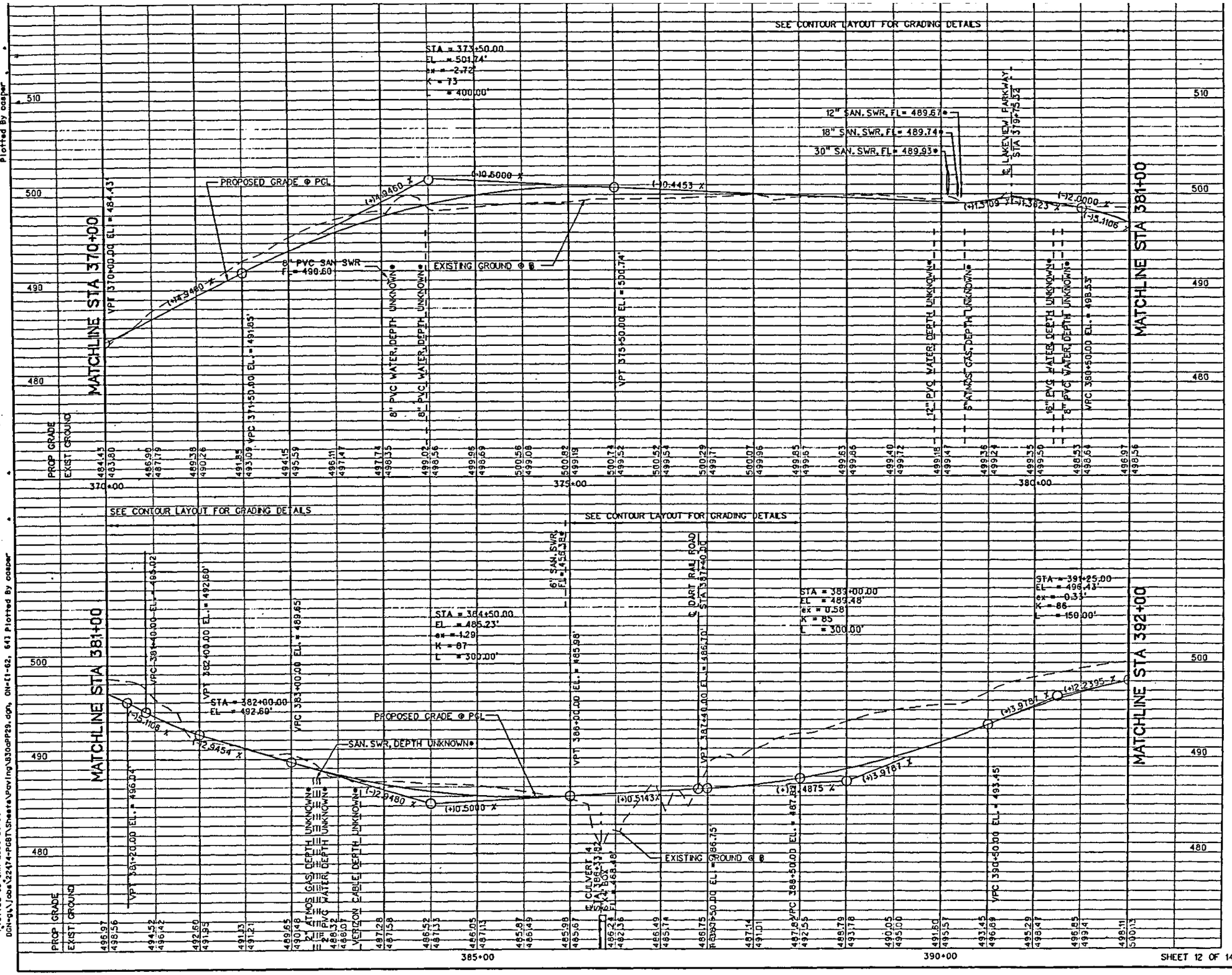

0 50 100 150 200
HORIZONTAL SCALE IN FEET

0 5 10 15 20
VERTICAL SCALE IN FEET

* UTILITY TO BE ABANDONED & RELOCATED BY OTHERS

STATE OF TEXAS
JAMES REISER
67281
REGISTERED PROFESSIONAL ENGINEER
1-3-'08

NO.	DATE	REVISION	APPROV.

PRESIDENT GEORGE BUSH TURNPIKE

NTTA
NORTH TEXAS TOLLWAY AUTHORITY

FRONTAGE ROAD PROFILE
SOUTH BOUND FRONTAGE ROAD
STA 370+00 TO STA 392+00

Parsons Brinckerhoff Quade & Douglas, Inc.
2717 Stemmons Freeway
Suite 1013
Dallas, TX 75207

SECTION XXX

DRAWN CPS	DATE 12-31-07	DESIGNED JR	DATE 12-31-07
CHECKED JR	DATE 12-31-07	SCALE 1"=100'	

CONTRACT NO. 02011-PGB-06-CN-EN SHEET 252

SHEET 12 OF 14

Plotted 03-JAN-2008 20:35

Plotted by casper

Plotted 03-JAN-2008 20:35
DGN=q:\Jobs\22474-PGB\Sheets\Paving\830dPP29.dgn, ON=(1-62, 64) Plotted by casper

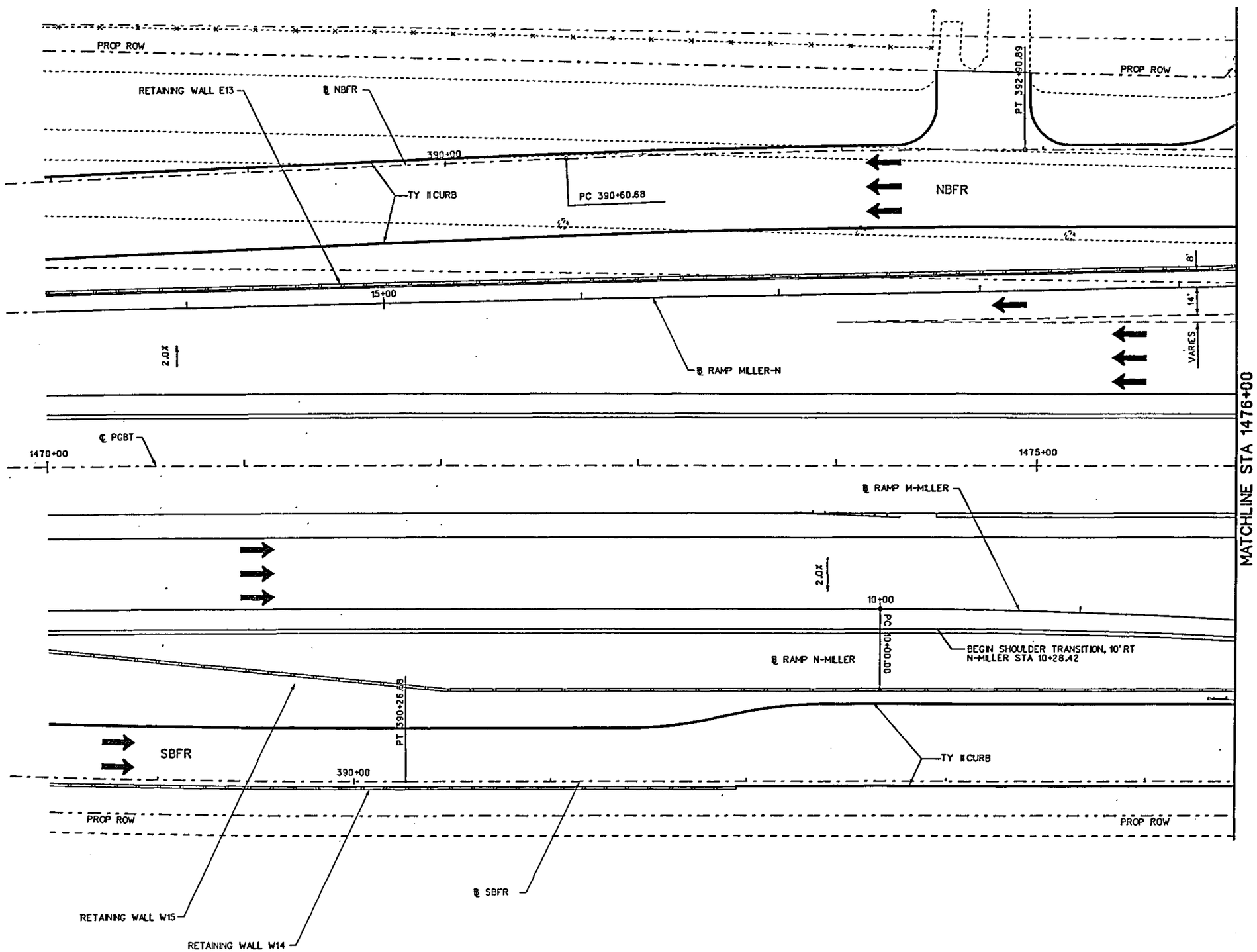

SHEET 9 OF 12

STATE OF TEXAS
JAMES REISER
67287
REGISTERED
PROFESSIONAL ENGINEER

1-3-'08

NO.	DATE	REVISION	APPROV.

PRESIDENT GEORGE BUSH TURNPIKE

NTTA
NORTH TEXAS TOLLWAY AUTHORITY

RAMP LAYOUT

RAMP MILLER-N AND RAMP N-MILLER

Parsons Brinckerhoff Quade & Douglas, Inc.
2777 Stemmons Freeway
Suite 1033
Dallas, TX 75207

SECTION XXX

DRAWN CPS	DATE 12-31-07	DESIGNED JR	DATE 12-31-07
CHECKED JR	DATE 12-31-07	SCALE 1"=50'	

CONTRACT NO. 02011-PGB-06-CN-EN SHEET 264

Plotted 03-JAN-2008 20:42
DGN=gt\Jobs\22474-PGBT\Sheets\Paving\B30GPP35.dgn, ON=[1-62, 64]
Plotted By casper

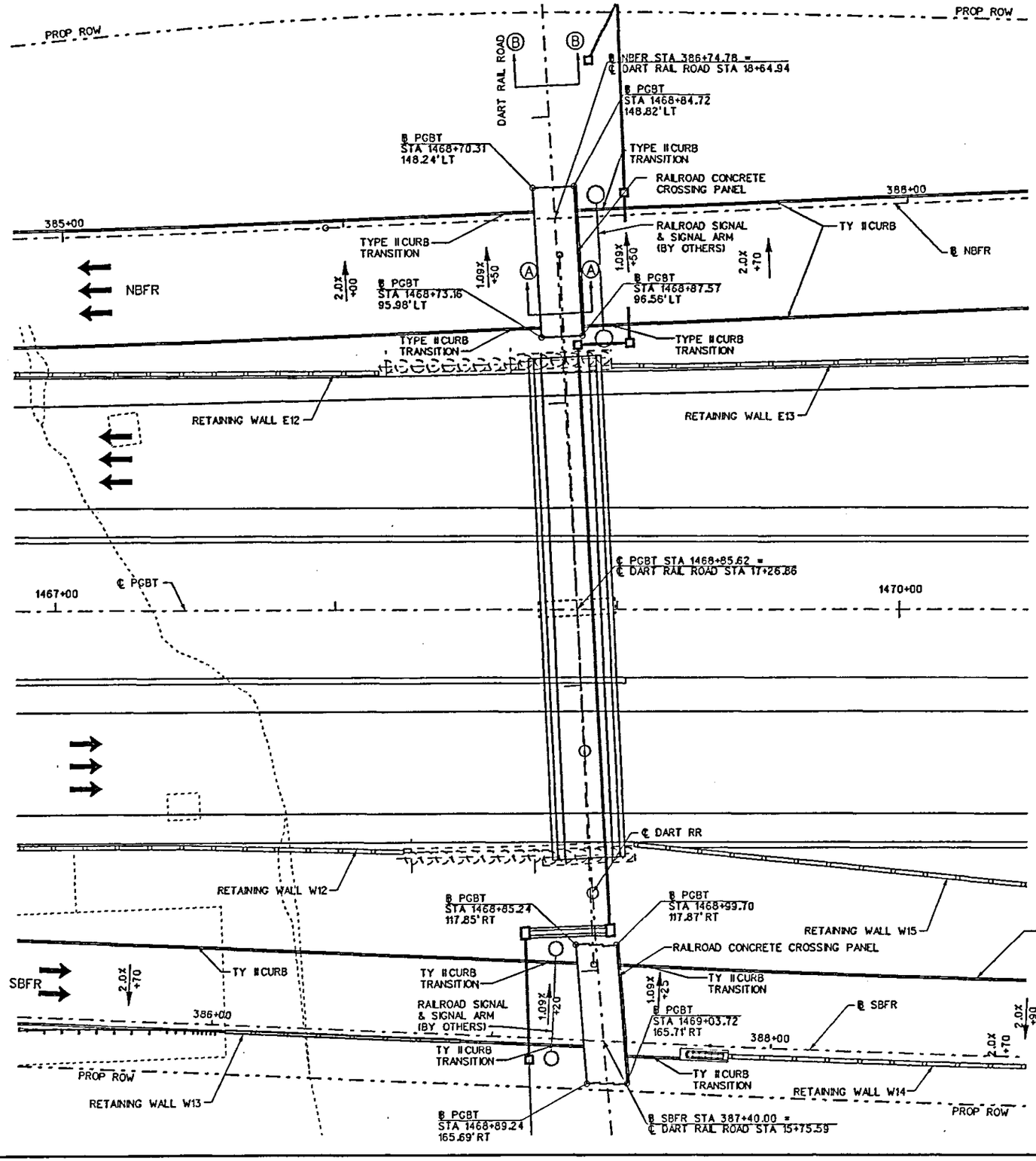

0 20 40 60 80
HORIZONTAL SCALE IN FEET

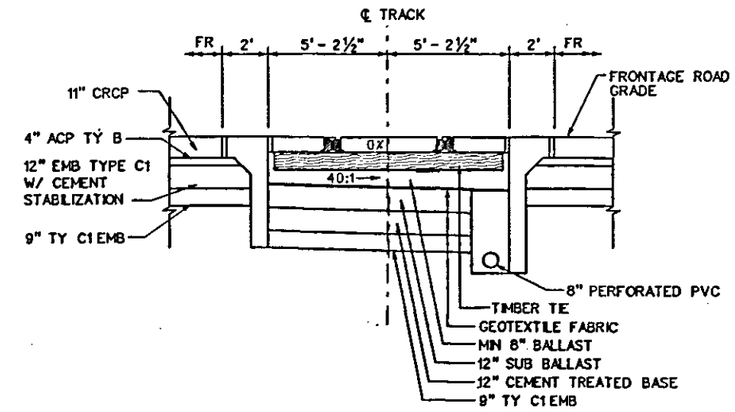

SECTION A-A
NTS

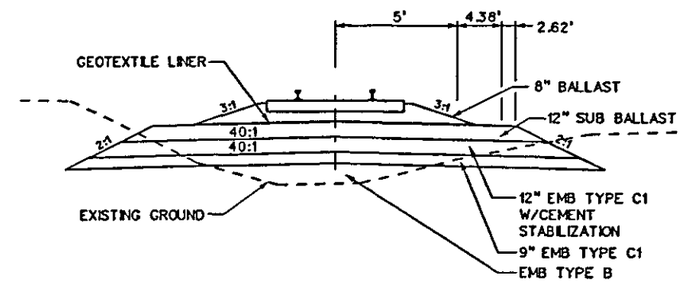

SECTION B-B
NTS

STATE OF TEXAS
JAMES M. DISTIN
85435
REGISTERED
PROFESSIONAL ENGINEER

James Distin 1-3-08

NO.	DATE	REVISION	APPROV.

PRESIDENT GEORGE BUSH TURNPIKE

NTTA
NORTH TEXAS TOLLWAY AUTHORITY

INTERSECTION LAYOUT

RAILROAD CROSSING

PB Parsons Brinckerhoff Quade & Douglas, Inc.
2777 Stemmons Freeway
Suite 833
Dallas, TX 75207

SECTION XXX

DRAWN JMD	DATE 12-31-07	DESIGNED JMD	DATE 12-31-07
CHECKED JMD	DATE 12-31-07	SCALE 1"=50'	

CONTRACT NO. 02011-PGB-06-CN-EN SHEET 272

SHEET 5 OF 9

Plotted 03-JAN-2008 20:47

Plotted By: aulptrand
Plotted 03-JAN-2008 20:47
DGN=gs\Jobs\22474-PGBT\Sheets\Paving\B30gPP41A.dgn, ON-E1-62, 643

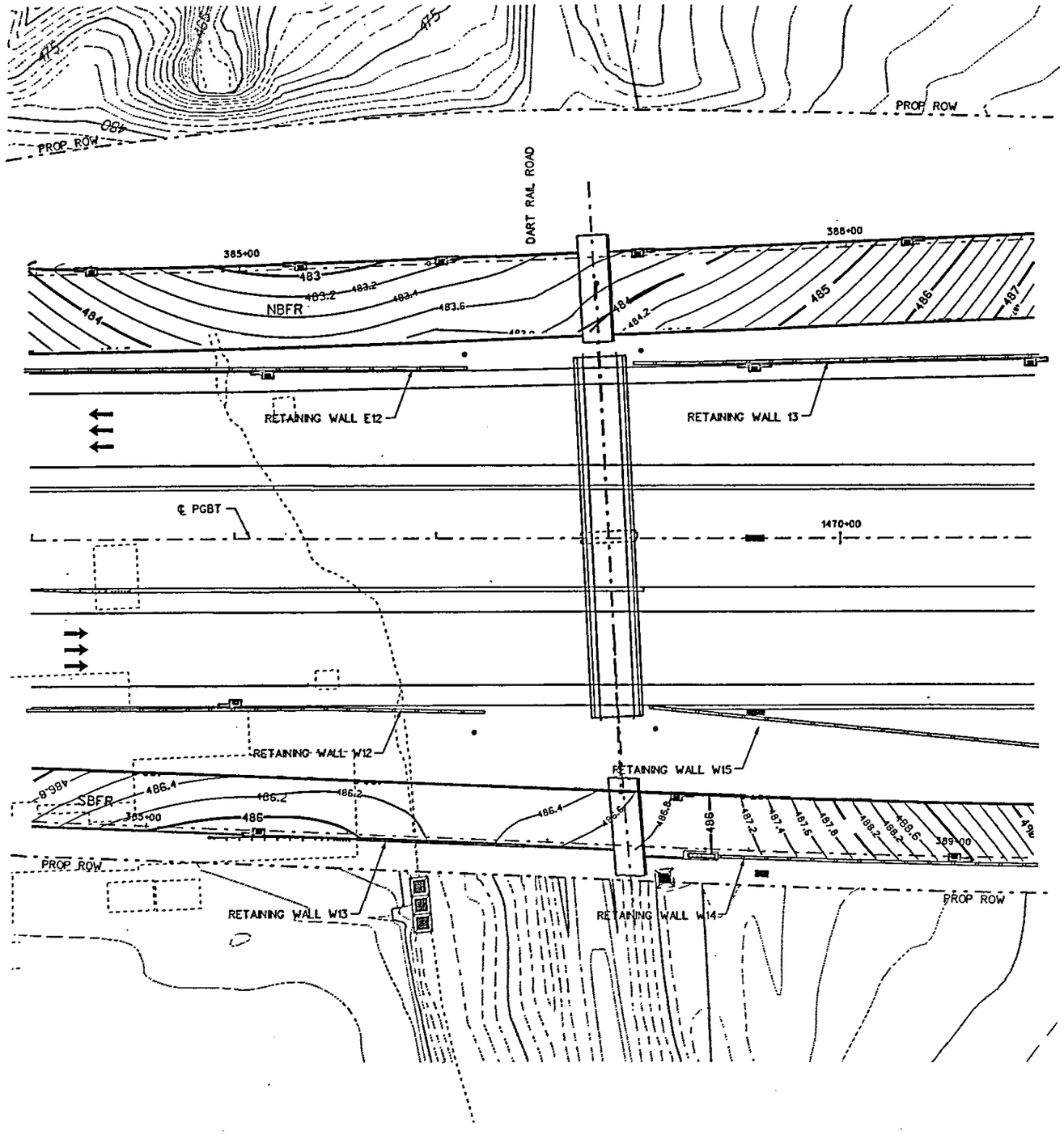

James M. Dotson, P.E.
4/3/08

STATE OF TEXAS
JAMES M. DOTSON
85435
REGISTERED
PROFESSIONAL ENGINEER

NO.	DATE	REVISION	APPROV.

PRESIDENT GEORGE BUSH TURNPIKE

NTTA
NORTH TEXAS TOLLWAY AUTHORITY

FRONTAGE ROAD
@ RAILROAD CROSSING

PB Parsons Brinckerhoff Quade & Douglas, Inc.
2777 Stemmons Freeway
Suite 833
Dallas, TX 75207

SECTION XXX

DRAWN JMD DATE 12-31-07 DESIGNED JMD DATE 12-31-07
CHECKED JMD DATE 12-31-07 SCALE 1"=60'

CONTRACT NO. 02011-PGB-06-CN-EN SHEET 286

SHEET 5 OF 9

Plotted 03-JAN-2008 20:14
DGN-gt\Jobs\22474-PGBT\Sheets\Paving\B30PC04.dgn, ON-[1-62, 64]
Plotted By: casper

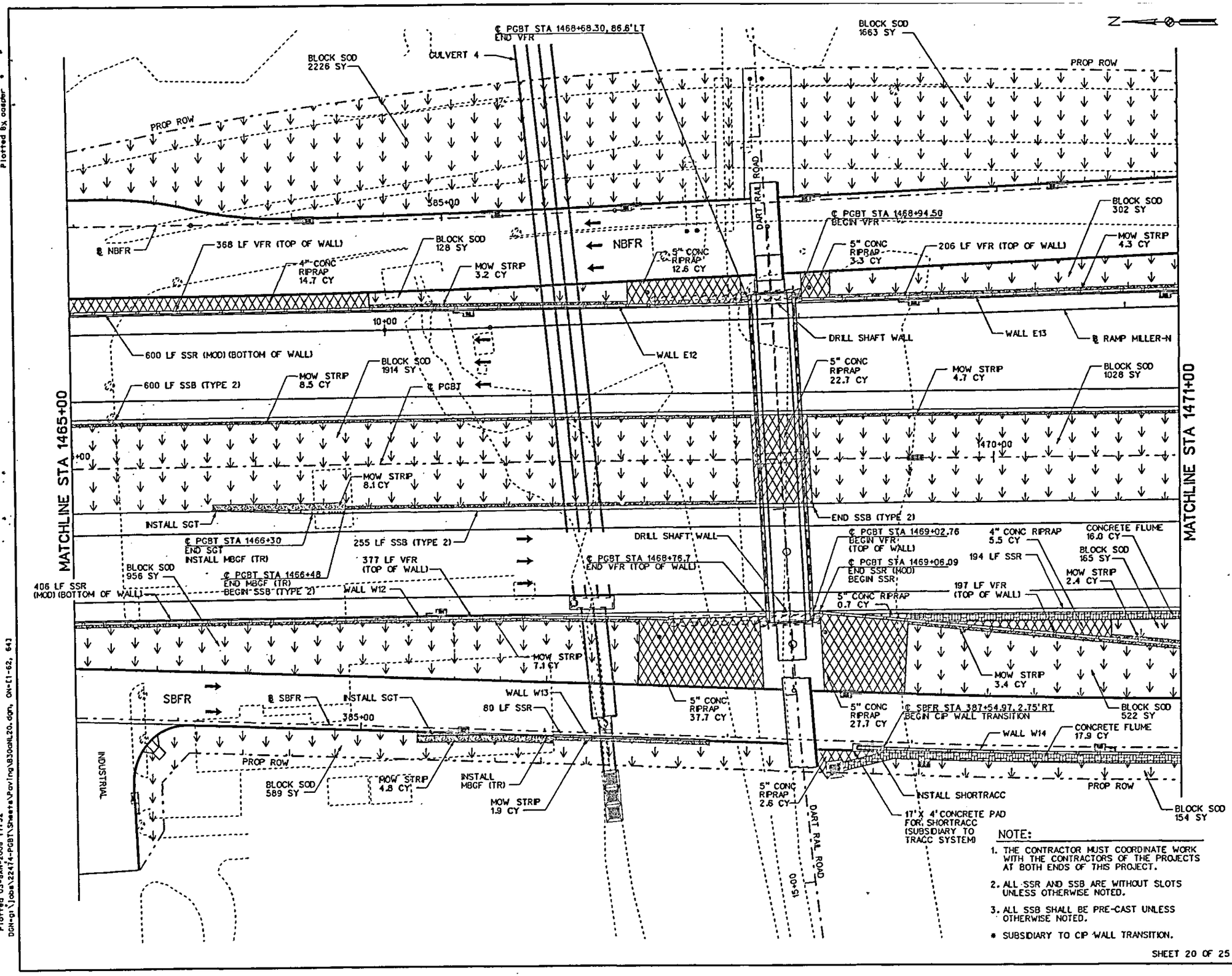

NOTE:

1. THE CONTRACTOR MUST COORDINATE WORK WITH THE CONTRACTORS OF THE PROJECTS AT BOTH ENDS OF THIS PROJECT.
2. ALL SSR AND SSB ARE WITHOUT SLOTS UNLESS OTHERWISE NOTED.
3. ALL SSB SHALL BE PRE-CAST UNLESS OTHERWISE NOTED.

* SUBSIDIARY TO CIP WALL TRANSITION.

SHEET 20 OF 25

0 25 50 75 100
HORIZONTAL SCALE IN FEET

ESTIMATED QUANTITIES		
DESCRIPTION	UNIT	SHEET TOTAL
COMPOST MANUF TOPSOIL (4")	SY	9,647
BLOCK SODDING	SY	9,647
RIPRAP (MOW STRIP) (5 IN) ①	CY	48.4
RIPRAP (CONC) (FLUME)	CY	33.9
RIPRAP (CONC) (4 IN)	CY	20.2
RIPRAP (CONC) (5 IN)	CY	107.3
RIPRAP (STAMPED CONC) (5 IN)	SY	0
CONCRETE MEDIAN	SY	0
RAIL (TY SSR)	LF	274
RAIL (TY SSR) (MOD)	LF	1006
VERTICAL FACE RAIL	LF	1148
CONCRETE BARRIER (SSB TY 2)	LF	855
CONCRETE BARRIER (SSB TY 5)	LF	0
METAL BEAM GD FEN (BLK OUT)	LF	0
TERM ANCHOR SECT (12 GA) (TAS)	EA	0
METAL BEAM GUARD FENCE (TR)	EA	2
GUARDRAIL END TREATMENT (SGT)	EA	2
CRASH CUSH. ATTEN (FASTRACC)	EA	0
CRASH CUSH. ATTEN (SHORTRACC)	EA	1
RIGHT-OF-WAY FENCE	LF	0

① INCLUDES MOW STRIP FOR GUARDRAIL.

LEGEND

- BLOCK SOD & COMPOST MANUFACTURED TOPSOIL
- CONCRETE RIPRAP
- CONCRETE FLUME
- MOW STRIP
- STAMPED CONCRETE

STATE OF TEXAS
JAMES REISER
67287
REGISTERED PROFESSIONAL ENGINEER
1-3-08

NO.	DATE	REVISION	APPROV.

PRESIDENT GEORGE BUSH TURNPIKE

NTTA
NORTH TEXAS TOLLWAY AUTHORITY

RAILING & RIPRAP LAYOUT

STA 1465+00 TO STA 1471+00

PB Parsons Brinckerhoff Quade & Douglas, Inc.
2777 Stemmons Freeway
Suite 1033
Dallas, TX 75207

SECTION XXX

DRAWN CPS DATE 12-31-07 DESIGNED JR DATE 12-31-07
CHECKED JR DATE 12-31-07 SCALE 1"=50'

CONTRACT NO. 02011-PGB-06-CN-EN SHEET 310

Plotted 03-JAN-2008 17:32

Plotted By: aasper
Plotted 03-JAN-2008 17:32
DGN=pt:\Jobs\22474-PGBT\Sheets\Paving\830aNL20.dgn, ON=E1-62, 64]

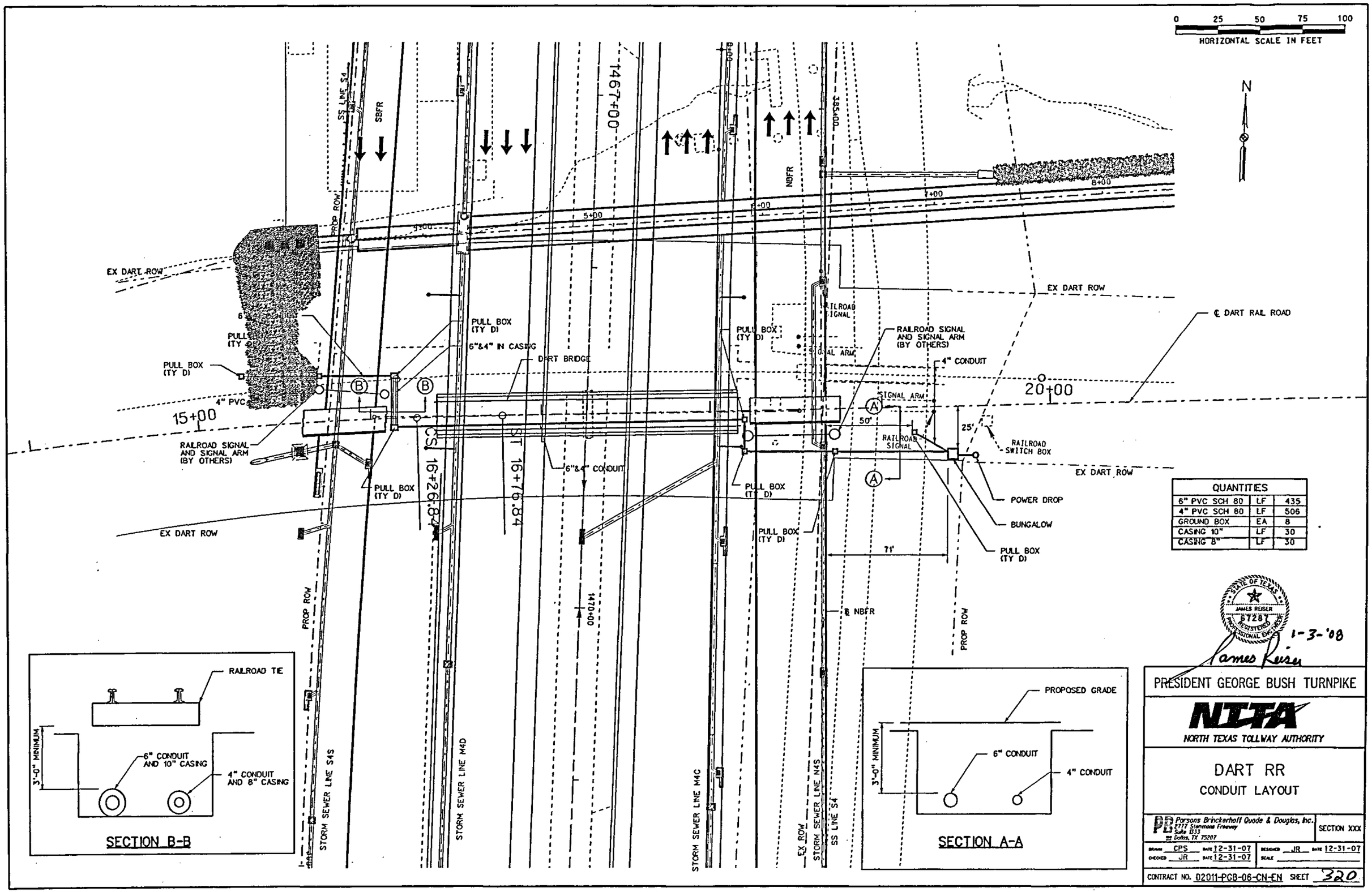

QUANTITIES		
6" PVC SCH 80	LF	435
4" PVC SCH 80	LF	506
GROUND BOX	EA	8
CASING 10"	LF	30
CASING 8"	LF	30

STATE OF TEXAS
JAMES REISER
67287
REGISTERED PROFESSIONAL ENGINEER

1-3-'08

James Reiser

PRESIDENT GEORGE BUSH TURNPIKE

NTTA
NORTH TEXAS TOLLWAY AUTHORITY

DART RR
CONDUIT LAYOUT

PB Parsons Brinckerhoff Quade & Douglas, Inc.
2777 Stemmons Freeway
Suite 1033
Dallas, TX 75207

SECTION XXX

DRAWN CPS DATE 12-31-07 DESIGNED JR DATE 12-31-07
CHECKED JR DATE 12-31-07 SCALE

CONTRACT NO. D2011-PGB-06-CN-EN SHEET 320

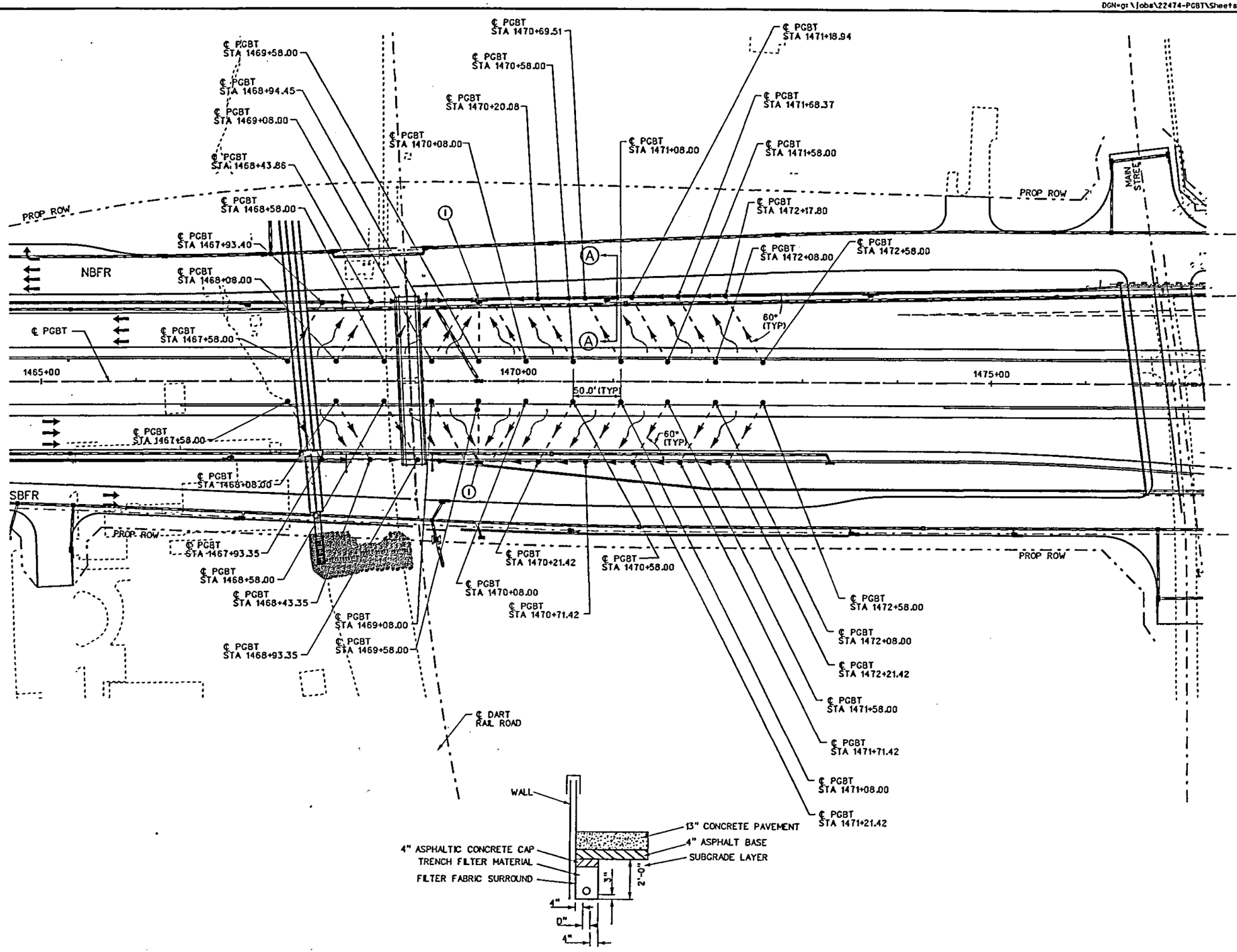

NOTES:

1. TRENCH WIDTH SHALL BE 16"
2. CONTRACTOR WILL NOT BE HELD TO DENSITY REQUIREMENTS FOR TRENCH CAP.
3. DENSITY REQUIREMENTS FOR ASPHALT BASE WITHIN 2 FEET OF WALL MAY BE WAIVED BY THE ENGINEER. (REFER TO DRA-007-2006 FOR STANDARDS)

STATE OF TEXAS — JAMES REISER — 67287 — REGISTERED PROFESSIONAL ENGINEER

1-3-'8

James Reiser

NO.	DATE	REVISION	APPROV.

PRESIDENT GEORGE BUSH TURNPIKE

NTTA
NORTH TEXAS TOLLWAY AUTHORITY

PAVEMENT UNDERDRAINS

MAIN LANES

PB Parsons Brinckerhoff Quade & Douglas, Inc.
2777 Stemmons Freeway
Suite 0313
Dallas, TX 75207

SECTION XXX

DRAWN CPS DATE 12-31-07 DESIGNED JR DATE 12-31-07
CHECKED JR DATE 12-31-07 SCALE 1"=100'

CONTRACT NO. 02011-PGB-06-CN-EN SHEET 521

SHEET 1 OF 1

Plotted 04-JAN-2008 00:00
DGN=g:\Jobs\22474-PGBT\Sheets\Paving\B30aU001.dgn, ON=(1-62, 643)
Plotted By mekonnen

DWG No. KS6-6001

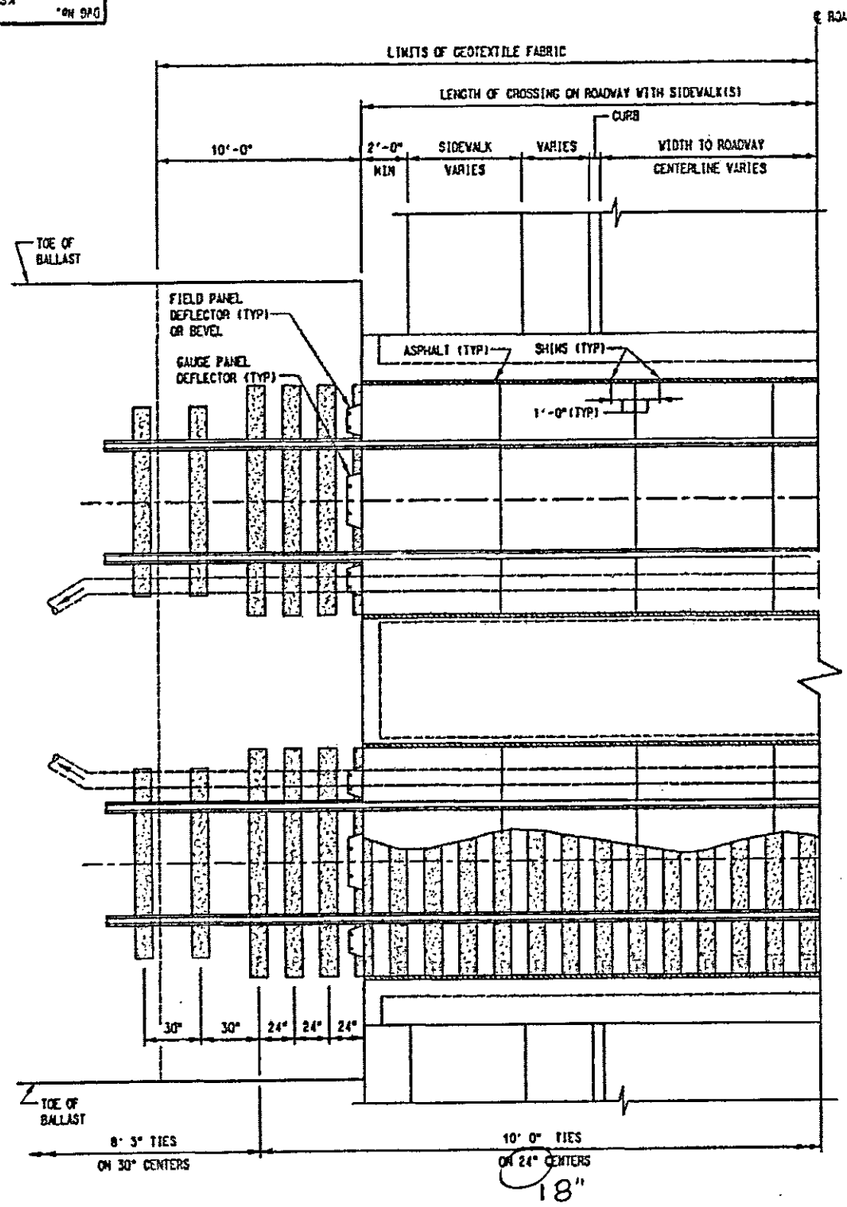

PLAN - TYPICAL GRADE CROSSING WITH UNDERDRAINS ADJACENT TO CENTER HEADER

SCALE: NTS (SYMMETRIC ABOUT CENTERLINE)

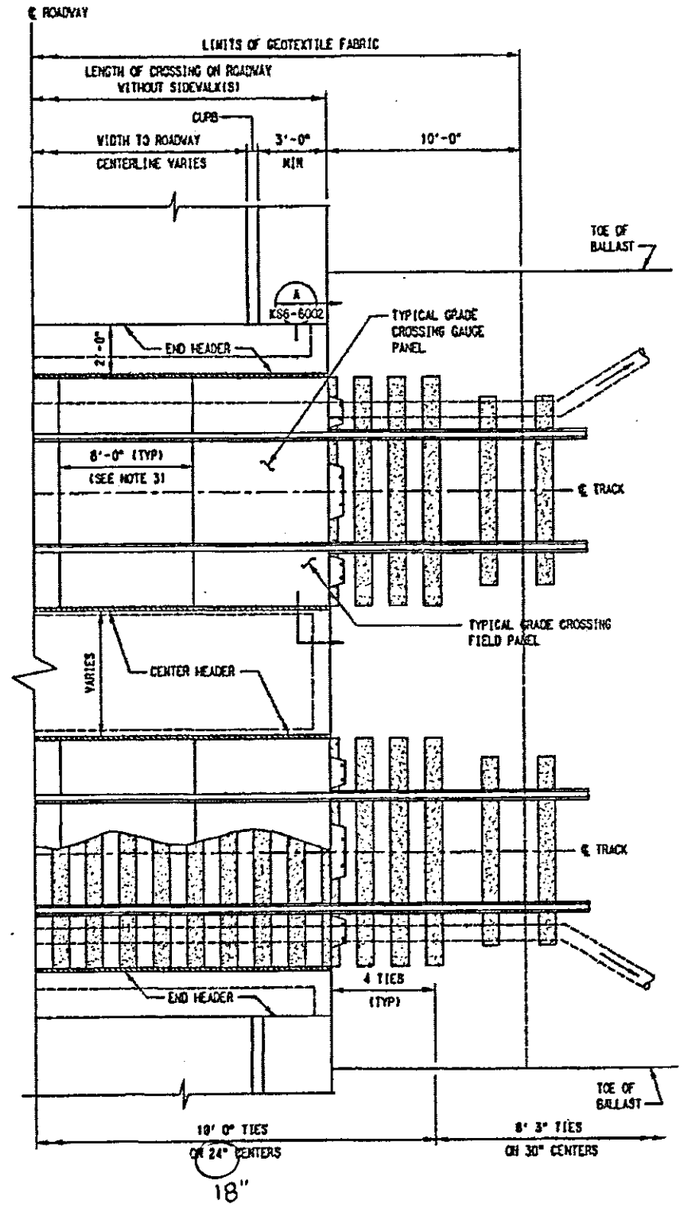

PLAN - TYPICAL GRADE CROSSING WITH UNDERDRAINS ADJACENT TO END HEADER

SCALE: NTS (SYMMETRIC ABOUT CENTERLINE)

NOTES:

1. GRADE CROSSINGS SHOWN ARE FOR TRACKS WITH ZERO SUPERELEVATIONS. GRADE CROSSING IN SUPERELEVATION TRACK SHALL BE DESIGNATED ON A SITE SPECIFIC BASIS.
2. GRADE CROSSING PANELS SHALL BE ANCHORED ACCORDING TO MANUFACTURER'S RECOMMENDATION. ENDS OF ALL CROSSING PANELS MUST FALL ON CENTERLINE OF CONCRETE TIE.
3. SIZE OF GRADE CROSSING PANELS SHOWN ON THIS DRAWING ARE FOR ILLUSTRATION ONLY.
4. OBLIQUE ANGLE GRADE CROSSINGS TO BE INSTALLED AS PER DWG No. KS6-6003.
5. TIES SHALL BE 10 FEET LONG CONCRETE.
6. SEE LINE SECTION CROSSING PLANS FOR LENGTH OF CROSSINGS. CROSSING PANELS PROVIDED SHALL EXTEND TO THE END OF THE HEADER OR BEYOND. PAYMENT FOR THE CROSSINGS SHALL BE BASED ON THE LENGTH OF THE HEADERS.
7. RAIL BOOTS SHALL BE INSTALLED ON ALL RAILS CONTINUOUSLY THROUGH CROSSING. EXTEND 8 INCHES BEYOND THE PANELS. INSTALL PER MANUFACTURERS RECOMMENDATIONS.
8. UNDERDRAINS TO BE INSTALLED PRIOR TO TRACKWORK.

REV	DATE	DESCRIPTION	BY	CHK	PROJ	APP

DISCLAIMER:

OFFICIAL USE ONLY.
NO WARRANTY OF ANY KIND
IS MADE BY DART
FOR ANY PURPOSE WHATSOEVER.

DART PROJECT

DART

SCALE	NO SCALE
DRAWN	S. POSLEY
DESIGNED	P. VON
CHECKED	J. HICKL
IN CHARGE	K. CHRISMANDER
DATE	30 NOV 93

CAES

CONTRACT SHEET No. 346 OF

TRACKWORK STANDARD

CONCRETE GRADE CROSSING
FOR MAINLINE
10'-0" CONCRETE TIES
(SHEET 1 OF 2)

CONTRACT	DWG No.	REV
	KS6-6001	0

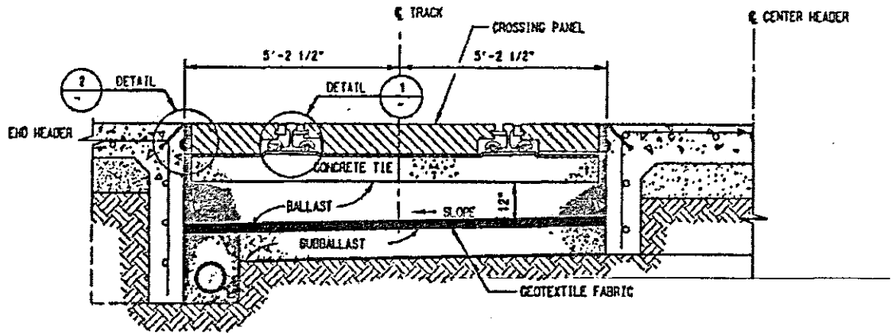

GRADE CROSSING WITH RAIL BOOT AND CONCRETE PANELS

NOT TO SCALE

A KS6-6001

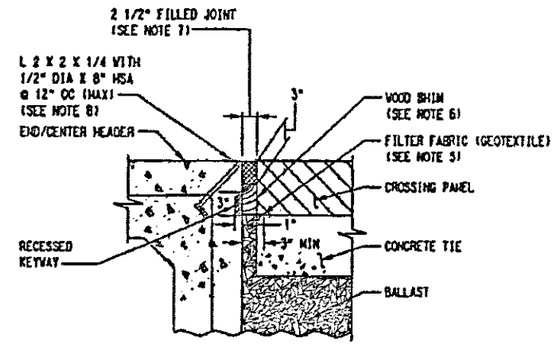

DETAIL

SCALE: 1 ½"=1'-0"

2

NOTES:

1. CONTRACTOR SHALL REMOVE AND DISPOSE OF TEMPORARY ASPHALT.
2. CONTRACTOR SHALL REMOVE SUFFICIENT BALLAST TO INSTALL TIES, RAIL AND FASTENINGS. THE CONTRACTOR SHALL ALLOW FOR A MINIMUM OF 2 SURFACING LIFTS OF THE TRACK, EACH LIFT A MINIMUM OF 1 INCH AND A MAXIMUM OF 2 1/2 INCHES. SURFACE OF BALLAST TO BE MECHANICALLY TAMPED PRIOR TO PLACING TIES AND RAIL.
3. PREVIOUSLY REMOVED BALLAST MAY BE UTILIZED TO OBTAIN FINAL LINE AND GRADE OF TRACK PRIOR TO INSTALLING CROSSING PANEL PROVIDED THAT IT IS FREE FROM FOREIGN MATERIALS.
4. RUBBER RAIL BOOT AT EACH RAIL SHALL BE CONTINUOUS ALONG THE LENGTH OF THE CROSSING, EXTEND 8 INCHES BEYOND THE PANELS. INSTALL PER MANUFACTURER'S RECOMMENDATIONS.
5. CONTRACTOR SHALL PLACE A LAYER OF GEOTEXTILE FILTER FABRIC AS SHOWN IN DETAIL "2" AT TOP OF TIE AND BALLAST THROUGH OUT THE LENGTH OF THE JOINT TO FORM A BARRIER BETWEEN THE ASPHALT AND THE BALLAST.
6. INSTALL A MINIMUM OF TWO SHIMS BETWEEN THE CROSSING PANEL AND THE CONCRETE HEADER AT EACH CROSSING PANEL. WOOD SHIMS SHALL BE PRESSURE TREATED TIMBER CUT AS NEEDED FOR A TIGHT FIT.
7. JOINT SHALL BE FILLED FULL DEPTH WITH HOT MIX ASPHALTIC CONCRETE (TYPE B, NCTCOG ITEM 2.4.13) AND MECHANICALLY COMPACTED. NOTE 1 INCH X 3 INCHES RECESSED KEYWAY IS CONTINUOUS. PRIOR TO PLACING ASPHALT, ALL EXPOSED CONCRETE SURFACES SHALL BE COATED W/ADHESIVE PETROLEUM TACK.
8. SEE CIVIL STANDARD DWG C36-0004 FOR CIVIL DETAILS.

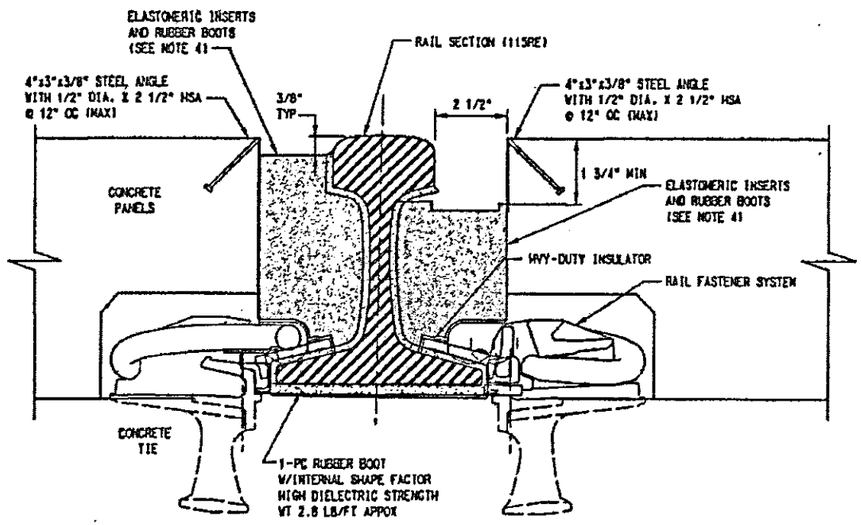

DETAIL

NOT TO SCALE

1

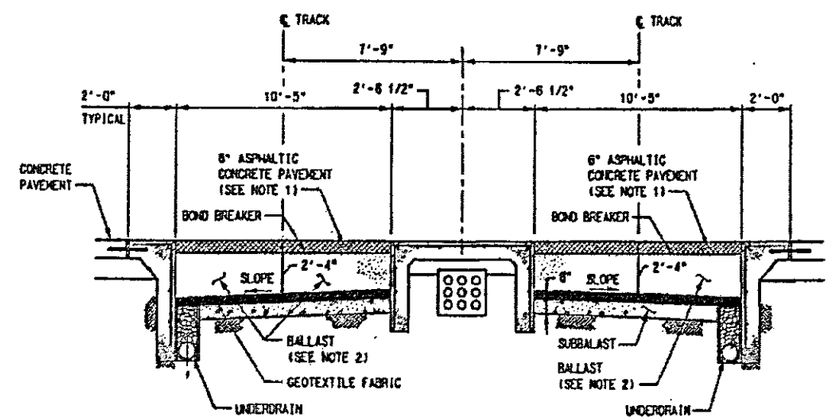

TEMPORARY HIGHWAY GRADE CROSSING INSTALLED PREVIOUS TO CROSSING PANELS AND TRACKWORK

NOT TO SCALE

REV	DATE	DESCRIPTION	BY	CHK	APP

DISCLAIMER:

OFFICIAL USE ONLY.
NO WARRANTY OF ANY KIND
IS MADE BY DART
FOR ANY PURPOSE WHATSOEVER.

DART PROJECT

DART

SCALE	AS NOTED
DRAWN	R. TOLLEY
DESIGNED	P. VOH
CHECKED	J. BIGGS
IN CHARGE	R. CHISAMORE
DATE	30 NOV 07

CAES

CONTRACT SHEET No. 347 OF

TRACKWORK STANDARD

CONCRETE GRADE CROSSING
FOR MAINLINE
10-0" CONCRETE TIES
(SHEET 2 OF 2)

CONTRACT | DWG No. KS6-6002 | REV 0

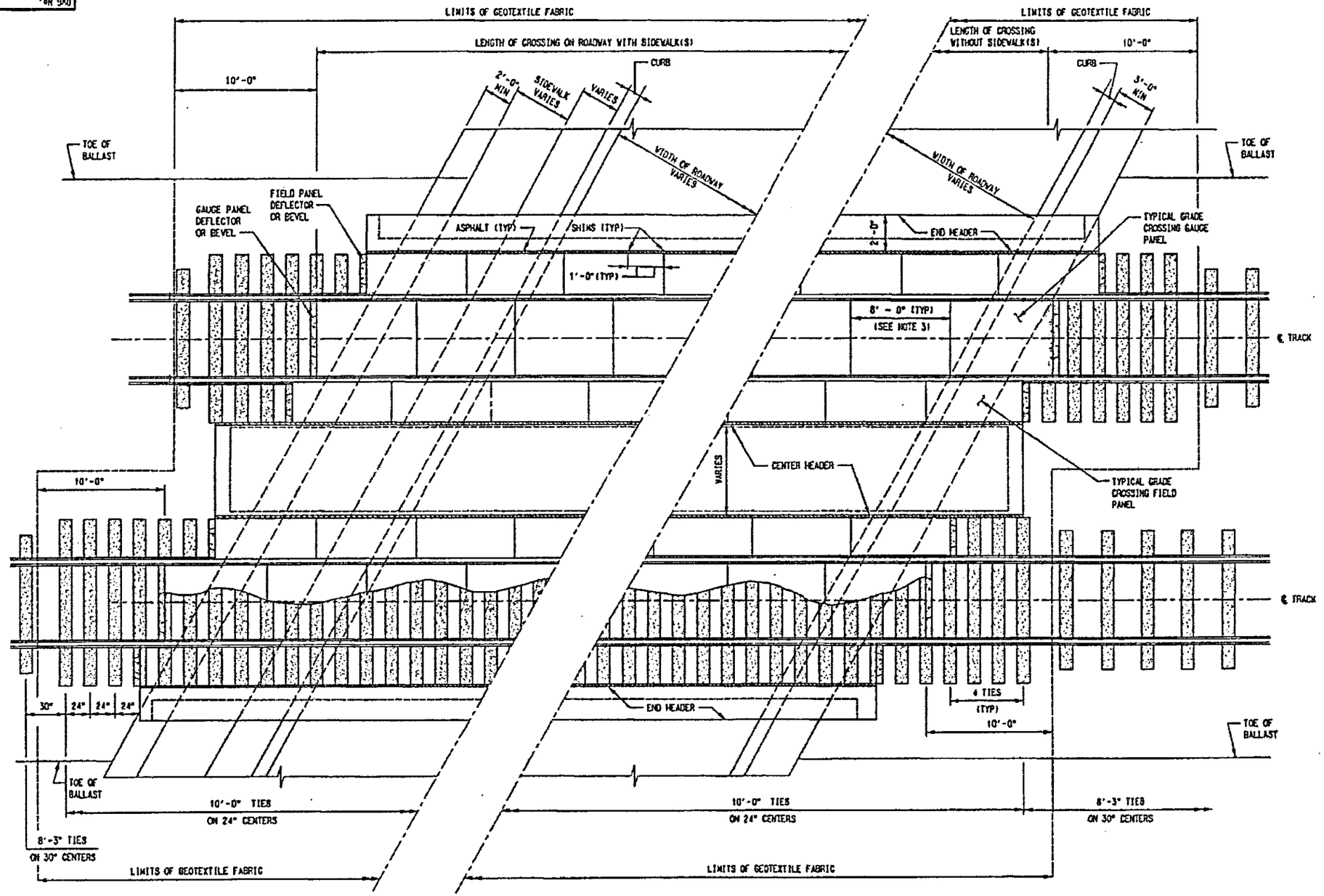

PLAN - TYPICAL SKEWED GRADE CROSSING

SCALE: NTS (SYMMETRIC ABOUT CENTERLINE)

NOTES:

1. GRADE CROSSINGS SHOWN ARE FOR TRACKS WITH ZERO SUPERELEVATIONS. GRADE CROSSING IN SUPERELEVATION TRACK SHALL BE DESIGNATED ON A SITE SPECIFIC BASIS.
2. GRADE CROSSING PANELS SHALL BE ANCHORED ACCORDING TO MANUFACTURER'S RECOMMENDATION. ENDS OF ALL CROSSING PANELS MUST FALL ON CENTERLINE OF CONCRETE TIE.
3. SIZE OF GRADE CROSSING PANELS SHOWN ON THIS DRAWING ARE FOR ILLUSTRATION ONLY.
4. RAIL BOOTS SHALL BE INSTALLED ON ALL RAILS CONTINUOUSLY THROUGH CROSSING, EXTEND 8" BEYOND THE PANELS. INSTALL PER MANUFACTURERS RECOMMENDATIONS.
5. TIES SHALL BE 10 FEET LONG CONCRETE.
6. SEE LINE SECTION CROSSING PLANS FOR LENGTH OF CROSSINGS. CROSSING PANELS PROVIDED SHALL EXTEND TO THE END OF THE HEADER OR BEYOND. PAYMENT FOR THE CROSSINGS SHALL BE BASED ON THE LENGTH OF THE HEADERS.
7. TRACK UNDERDRAIN SYSTEM NOT SHOWN FOR CLARITY. SEE CIVIL STANDARD DRAWINGS.

DISCLAIMER:

OFFICIAL USE ONLY.
NO WARRANTY OF ANY KIND
IS MADE BY DART
FOR ANY PURPOSE WHATSOEVER.

DART PROJECT

DART

CAES

CONTRACT SHEET No. 348 OF

TRACKWORK STANDARD

CONCRETE GRADE CROSSING
FOR MAINLINE - SKEWED
10'-0" CONCRETE TIES

CONTRACT | DWG No. KS6-6003 | REV 0

Plotted By sunthudkarn
Plotted 03-JAN-2008 20:47
DGN=G:\JOBS\22474-PGBT\Sheets\Wall1\B30cnm03.dgn, ON-CO-623

0 100 200 300 400
HORIZONTAL SCALE IN FEET

LEGEND
RETAINING WALL
SOUND WALL

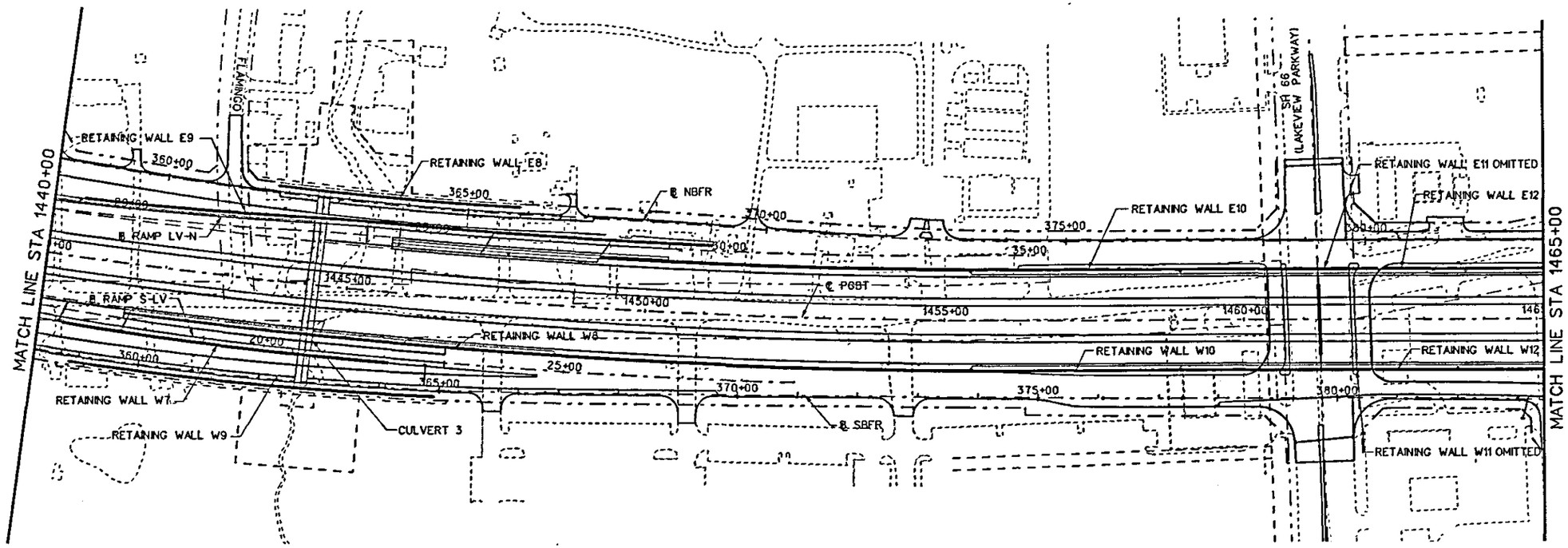

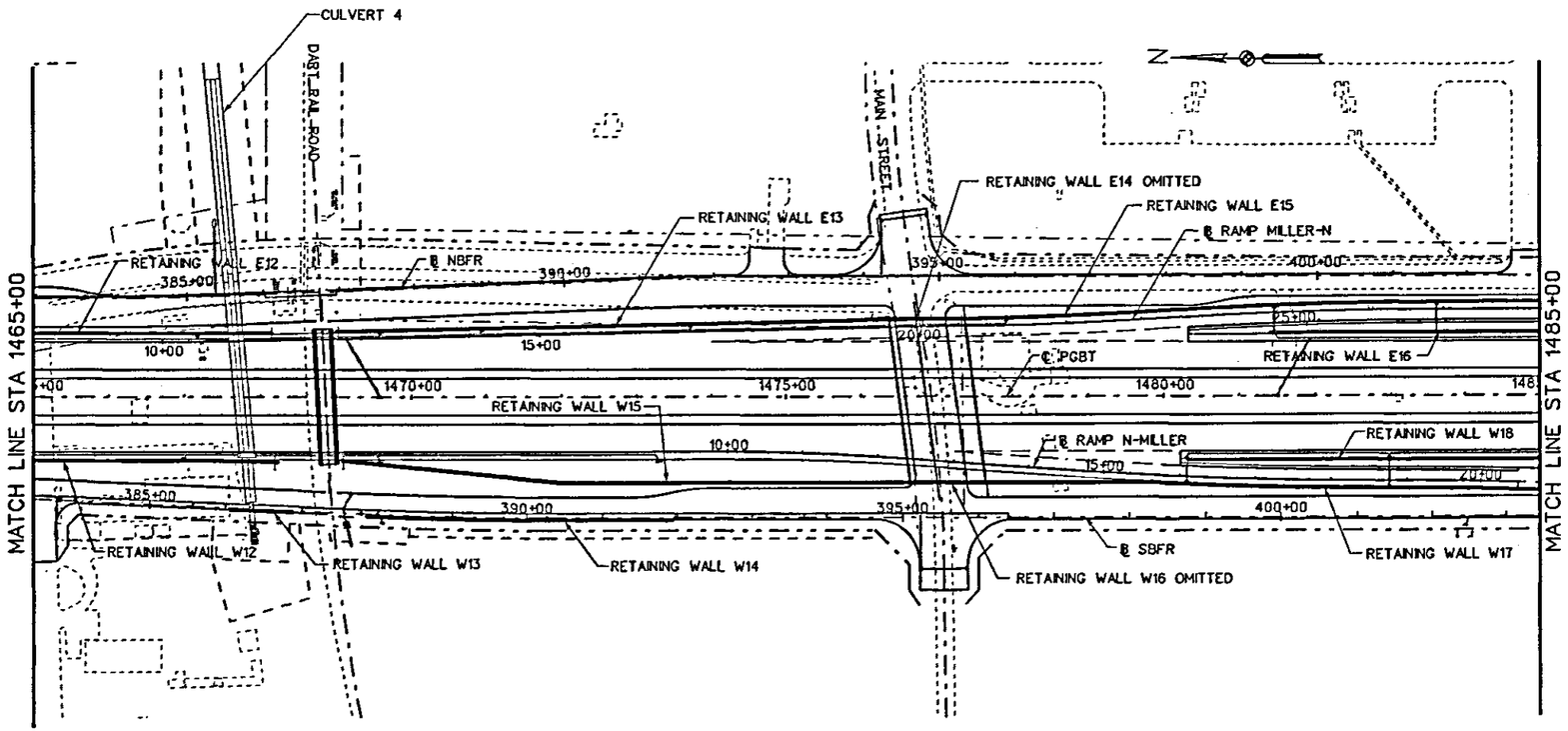

STATE OF TEXAS
JAMES REISER
61284
REGISTERED
PROFESSIONAL ENGINEER
1-3-'08

NO.	DATE	REVISION	APPROV.

PRESIDENT GEORGE BUSH TURNPIKE

NTTA
NORTH TEXAS TOLLWAY AUTHORITY

RETAINING WALL/SOUND WALL LAYOUT MAP

STA 1440+00 TO STA 1485+00

Parsons Brinckerhoff Quade & Douglas, Inc.
2117 Stemmons Freeway
Suite 833
Dallas, TX 75207

SECTION XXX

DRAWN CPS DATE 12-31-07 DESIGNED JR DATE 12-31-07
CHECKED JR DATE 12-31-07 SCALE

CONTRACT NO. 02011-PGB-06-CN-EN SHEET 351

SHEET 3 OF 4

Plotted 03-JAN-2008 20:47

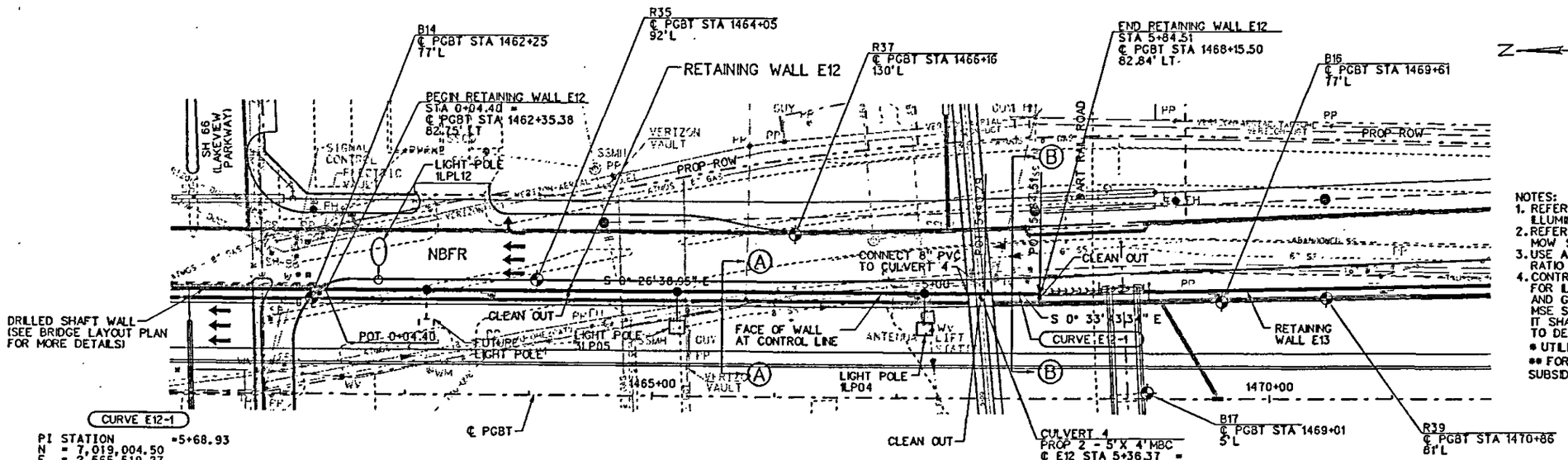

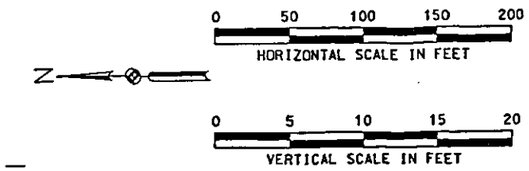

NOTES:
1. REFER TO RAILING & RIPRAP LAYOUT, DRAINAGE PLAN AND ILLUMINATION LAYOUT FOR MORE DETAILS
2. REFER TO RAILING & RIPRAP LAYOUT FOR FLUME AND MOW STRIP QUANTITIES
3. USE A MINIMUM REINFORCED SECTION WIDTH TO HEIGHT RATIO OF 1:1 FOR ALL MSE WALLS
4. CONTRACTOR SHALL INSTALL/CONSTRUCT DRILL SHAFTS FOR ILLUMINATIONS, CCTV TOWERS, TRAFFIC SIGNAL POLES AND GUIDE SIGN BRIDGE COLUMNS THAT ARE WITHIN THE MSE STRAP ZONE PRIOR TO INSTALLING THE MSE STRAPS. IT SHALL BE THE RESPONSIBILITY OF THE CONTRACTOR TO DETERMINE THE STRAP ZONE LIMIT.

* UTILITY TO BE ABANDONED & RELOCATED BY OTHERS
** FOR CONTRACTORS INFORMATION ONLY. SUBSIDIARY TO RETAINING WALL.

CURVE E12-1

PI STATION	=5+68.93
N	= 7,019,004.50
E	= 2,565,519.27
DELTA	= 1° 08' 44.75" (LT)
TANGENT	= 28.64
DEGREE OF CURVE	= 2° 00' 01.35"
LENGTH	= 57.28
RADIUS	= 2,864.25
PC STATION	= 5+40.29
PT STATION	= 5+97.57

THIS WALL IS SUBJECT TO INUNDATION AND MUST BE DESIGNED CONSIDERING 3 FT. OF DRAWDOWN BELOW THE 100 YEAR WATER SURFACE ELEVATION

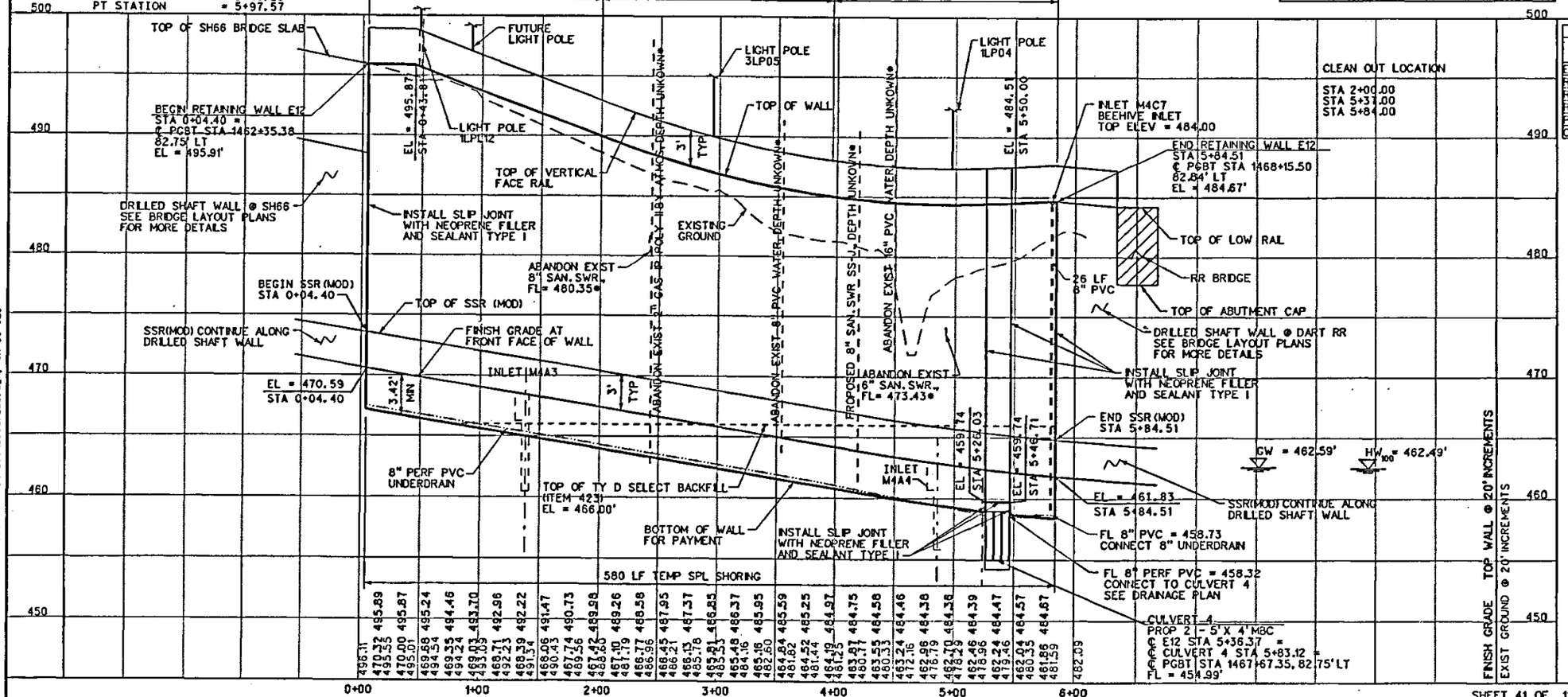

ESTIMATED QUANTITIES		
DESCRIPTION	UNIT	SHEET TOTAL
EMBANKMENT (FINAL) (DENS CONT) (TY A)	CY	
RETAINING WALL (MSE)(TY A OR B PANEL)	SF	14,999
RETAINING WALL (MSE)(TY C PANEL)	SF	
RETAINING WALL (CIP)(TRANSITION)	SF	
PIPE UNDERDRAINS (TY 8)(8")**	LF	607
CLEANOUTS**	EA	3

STATE OF TEXAS — JAMES REISER — 67287 — REGISTERED PROFESSIONAL ENGINEER

1-3-'08

James Reiser

NO.	DATE	REVISION	APPROV.

PRESIDENT GEORGE BUSH TURNPIKE

NTTA
NORTH TEXAS TOLLWAY AUTHORITY

RETAINING WALL PLAN & PROFILE
WALL E12

PB Parsons Brinckerhoff Quade & Douglas, Inc.
2777 Stemmons Freeway
Suite 633
Dallas, TX 75207

SECTION XXX

DRAWN CPS	DATE 12-31-07	DESIGNED JR	DATE 12-31-07
CHECKED JR	DATE 12-31-07	SCALE 1"=100'	

CONTRACT NO. 02011-PGB-06-CN-EN SHEET 393

Plotted 03-JAN-2008 20:40
DGN=G:\JOBS\22474-PGBT\Sheets\Wall\B30aWL33.dgn, ON=(0-62)
Plotted By sunthudkarn

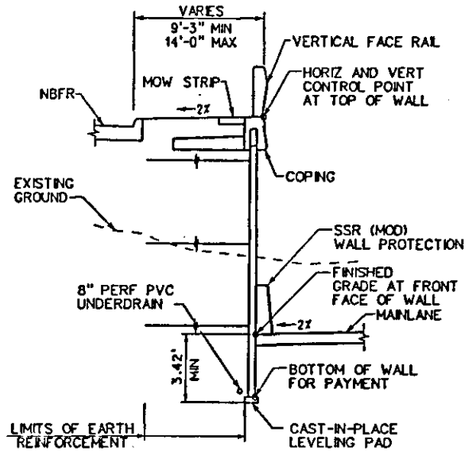

SECTION A-A
NTS MSE WALL

STA 0+04.40 TO STA 5+72.76

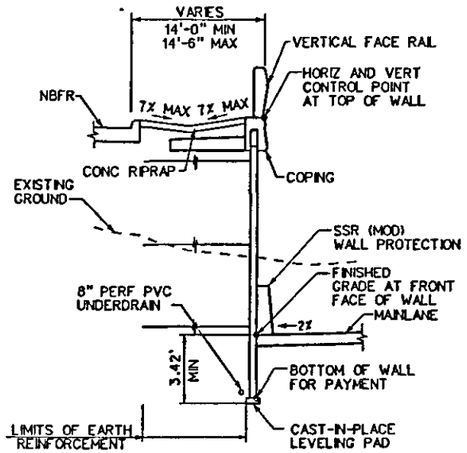

SECTION B-B
NTS MSE WALL

STA 5+72.76 TO STA 5+84.51

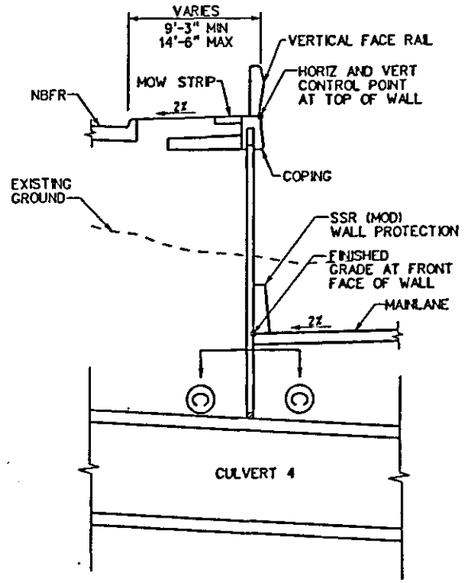

SECTION AT CULVERT
NTS MSE WALL

STA 5+13.40 TO STA 5+34.08

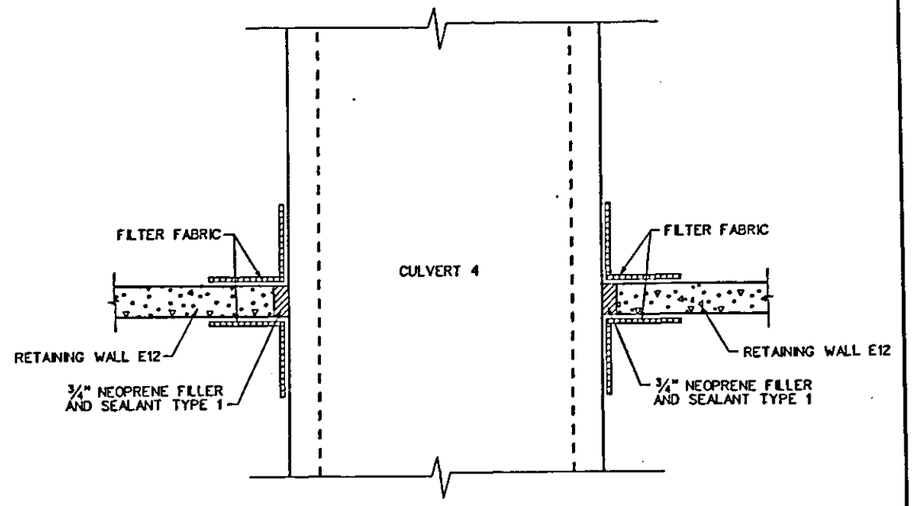

SECTION C-C
NTS MSE WALL

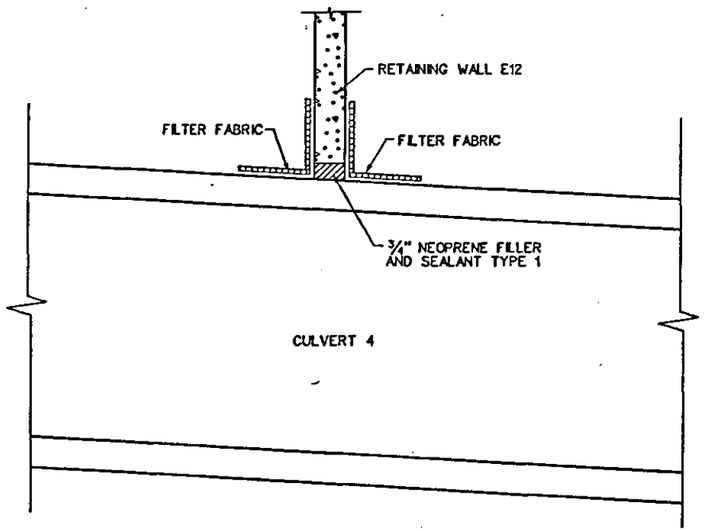

WALL/TOP OF CULVERT JOINT DETAIL
NTS MSE WALL

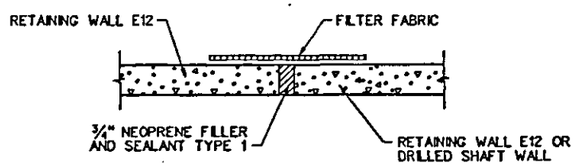

SLIP JOINT DETAIL
NTS MSE WALL

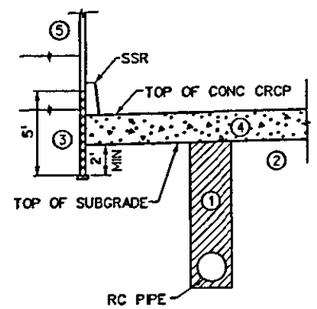

CONSTRUCTION SEQUENCES
NTS MSE WALL

CONSTRUCT ITEMS IN THE FOLLOWING ORDER

1. STORM SEWER PIPES WITH BACKFILL
2. SUBGRADE AND SELECTED FILL (IF REQUIRED)
3. FIRST 5 FT PANEL OF RETAINING WALL
4. BASE AND CONCRETE CRCP
5. THE REST OF RETAINING WALL AND RAILS

STATE OF TEXAS
JAMES REISER
67287
REGISTERED
PROFESSIONAL ENGINEER

1-3-'08

NO.	DATE	REVISION	APPROV.

PRESIDENT GEORGE BUSH TURNPIKE

NTTA
NORTH TEXAS TOLLWAY AUTHORITY

RETAINING WALL
PLAN & PROFILE
WALL E12 SECTIONS AND DETAILS

PB Parsons Brinckerhoff Quade & Douglas, Inc.
2777 Stemmons Freeway
Suite 1133
Dallas, TX 75207

SECTION XXX

DRAWN CPS	DATE 12-31-07	DESIGNED JR	DATE 12-31-07
CHECKED JR	DATE 12-31-07	SCALE 1"=100'	

CONTRACT NO. 02011-PGB-06-CN-EN SHEET 394

SHEET 42 OF

Plotted By sunthudorn
Plotted 03-JAN-2008 20:40
DGN=G:\JOBS\22474-PGBT\Sheets\Wall\B30dWL33a.dgn, ON=[0-62]

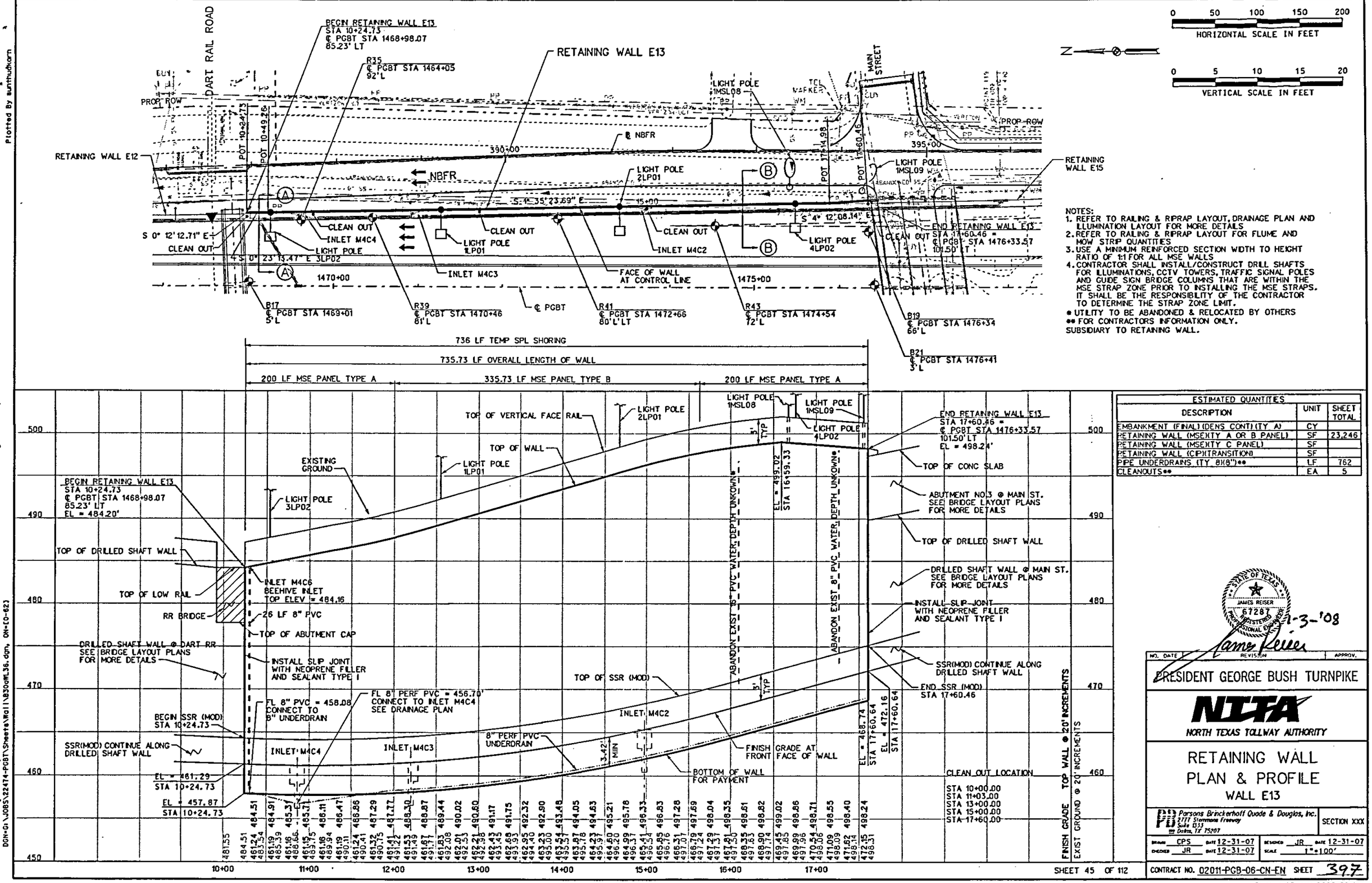

NOTES:
1. REFER TO RAILING & RIPRAP LAYOUT, DRAINAGE PLAN AND ILLUMINATION LAYOUT FOR MORE DETAILS
2. REFER TO RAILING & RIPRAP LAYOUT FOR FLUME AND MOW STRIP QUANTITIES
3. USE A MINIMUM REINFORCED SECTION WIDTH TO HEIGHT RATIO OF 1:1 FOR ALL MSE WALLS
4. CONTRACTOR SHALL INSTALL/CONSTRUCT DRILL SHAFTS FOR ILLUMINATIONS, CCTV TOWERS, TRAFFIC SIGNAL POLES AND GUIDE SIGN BRIDGE COLUMNS THAT ARE WITHIN THE MSE STRAP ZONE PRIOR TO INSTALLING THE MSE STRAPS. IT SHALL BE THE RESPONSIBILITY OF THE CONTRACTOR TO DETERMINE THE STRAP ZONE LIMIT.

* UTILITY TO BE ABANDONED & RELOCATED BY OTHERS
** FOR CONTRACTORS INFORMATION ONLY.
SUBSIDIARY TO RETAINING WALL.

ESTIMATED QUANTITIES

DESCRIPTION	UNIT	SHEET TOTAL
EMBANKMENT (FINAL)(DENS CONT)(TY A)	CY	
RETAINING WALL (MSE)(TY A OR B PANEL)	SF	23,246
RETAINING WALL (MSE)(TY C PANEL)	SF	
RETAINING WALL (CIP)(TRANSITION)	SF	
PIPE UNDERDRAINS (TY 8)(8")**	LF	762
CLEANOUTS**	EA	5

STATE OF TEXAS
JAMES REISER
67287
REGISTERED PROFESSIONAL ENGINEER
1-3-'08

NO.	DATE	REVISION	APPROV.

PRESIDENT GEORGE BUSH TURNPIKE

NTTA
NORTH TEXAS TOLLWAY AUTHORITY

RETAINING WALL
PLAN & PROFILE
WALL E13

Parsons Brinckerhoff Quade & Douglas, Inc.
2777 Stemmons Freeway
Suite 833
Dallas, TX 75207

SECTION XXX

DRAWN CPS DATE 12-31-07 DESIGNED JR DATE 12-31-07
CHECKED JR DATE 12-31-07 SCALE 1"=100'

CONTRACT NO. 02011-PGB-06-CN-EN SHEET 397

SHEET 45 OF 112

Plotted 03-JAN-2008 20:41

Plotted by sunthudkarn

Plotted 03-JAN-2008 20:41
DGN=G:\JOBS\22474-PGBT\Sheets\Wall\B30OWL36.dgn, ON=[0-62]

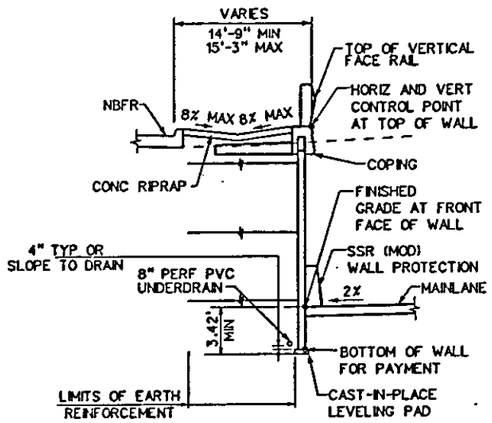

SECTION A-A
NTS MSE WALL

STA 10+24.73 TO STA 10+39.58

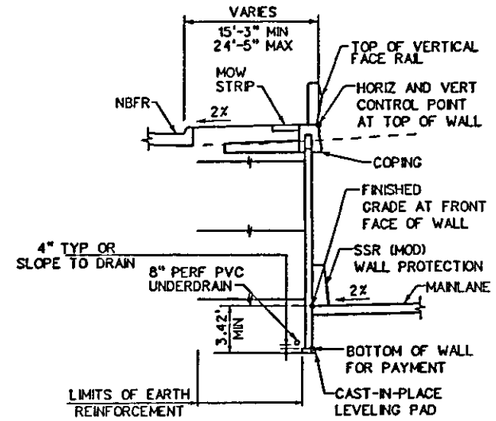

SECTION B-B
NTS MSE WALL

STA 10+39.58 TO STA 17+60.46

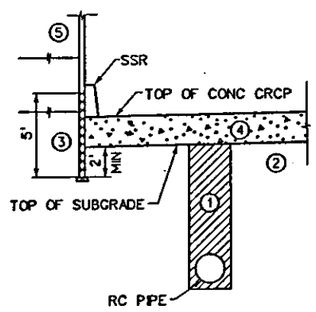

CONSTRUCTION SEQUENCES
NTS MSE WALL

CONSTRUCT ITEMS IN THE FOLLOWING ORDER

1. STORM SEWER PIPES WITH BACKFILL
2. SUBGRADE AND SELECTED FILL (IF REQUIRED)
3. FIRST 5 FT PANEL OF RETAINING WALL
4. BASE AND CONCRETE CRCP
5. THE REST OF RETAINING WALL AND RAILS

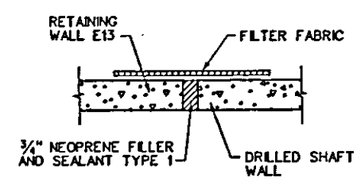

SLIP JOINT DETAIL
NTS MSE WALL

STATE OF TEXAS
JAMES REISER
61287
REGISTERED PROFESSIONAL ENGINEER

James Reiser 1-3-'08

NO.	DATE	REVISION	APPROV.

PRESIDENT GEORGE BUSH TURNPIKE

NTTA
NORTH TEXAS TOLLWAY AUTHORITY

RETAINING WALL
PLAN & PROFILE
WALL E13 SECTIONS AND DETAILS

PB Parsons Brinckerhoff Quade & Douglas, Inc.
2777 Stemmons Freeway
Suite 833
Dallas, TX 75207

SECTION XXX

DRAWN CPS	DATE 12-31-07	DESIGNED JR	DATE 12-31-07
CHECKED JR	DATE 12-31-07	SCALE 1"=100'	

CONTRACT NO. 02011-PGB-06-CN-EN SHEET 398

SHEET 46 OF 112

Plotted 03-JAN-2008 20:41

Plotted by sunthudkarn

Plotted 03-JAN-2008 20:41
DGN=G:\JOBS\22474-PGBT\Sheets\Wall\B30dWL36a.dgn, DN=(0-623

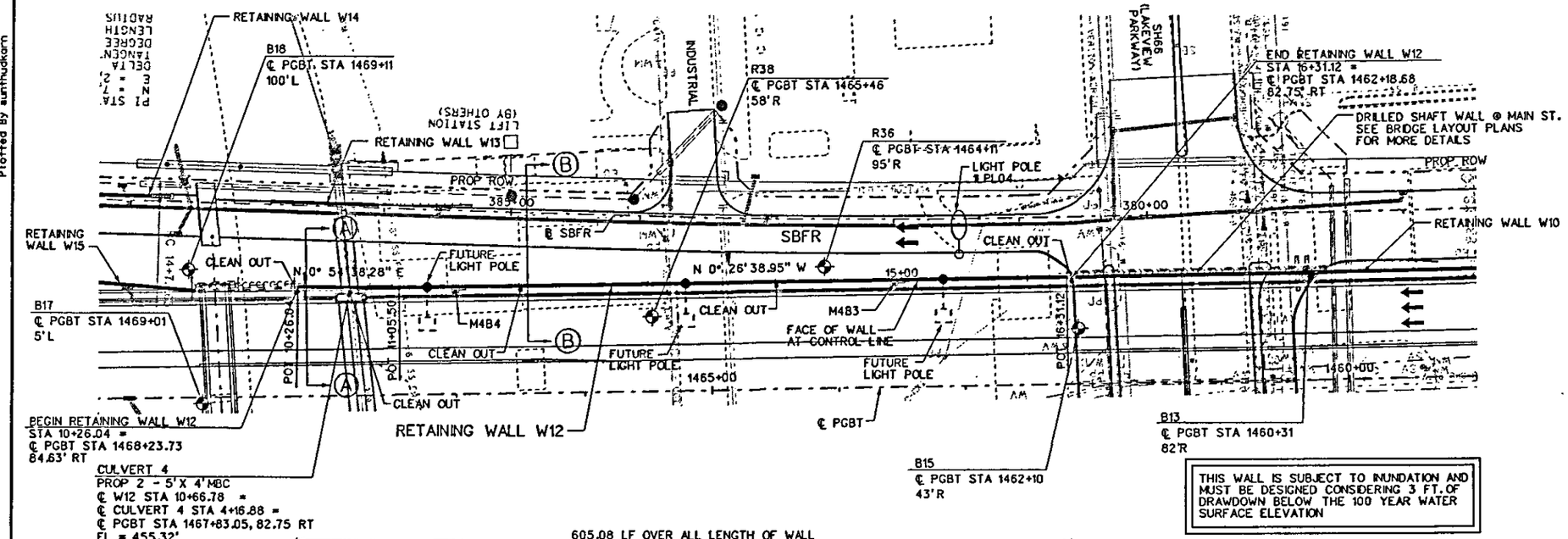

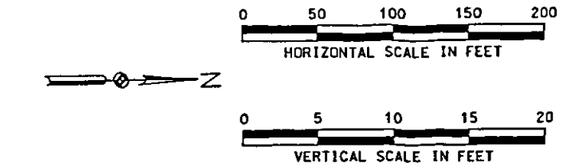

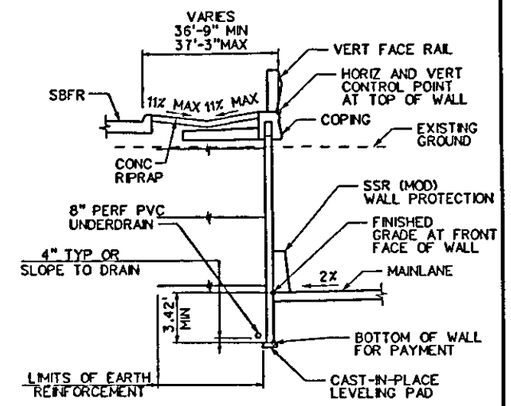

SECTION A-A

NTS MSE WALL

STA 10+26.04 TO STA 10+41.90

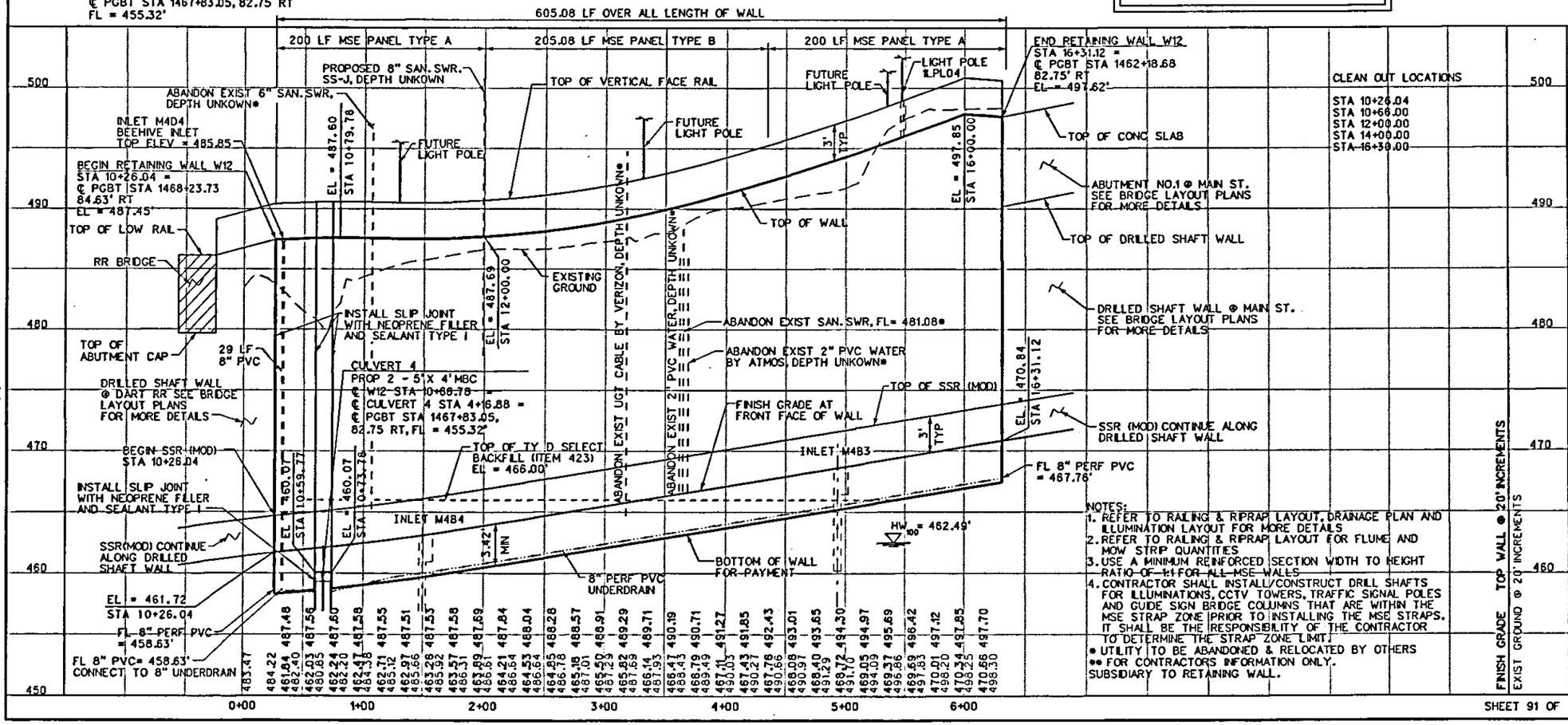

CLEAN OUT LOCATIONS

STA 10+26.04
STA 10+66.00
STA 12+00.00
STA 14+00.00
STA 16+30.00

NOTES:
1. REFER TO RAILING & RIPRAP LAYOUT, DRAINAGE PLAN AND ILLUMINATION LAYOUT FOR MORE DETAILS
2. REFER TO RAILING & RIPRAP LAYOUT FOR FLUME AND MOW STRIP QUANTITIES
3. USE A MINIMUM REINFORCED SECTION WIDTH TO HEIGHT RATIO OF 1:1 FOR ALL MSE WALLS
4. CONTRACTOR SHALL INSTALL/CONSTRUCT DRILL SHAFTS FOR ILLUMINATIONS, CCTV TOWERS, TRAFFIC SIGNAL POLES AND GUDE SIGN BRIDGE COLUMNS THAT ARE WITHIN THE MSE STRAP ZONE PRIOR TO INSTALLING THE MSE STRAPS. IT SHALL BE THE RESPONSIBILITY OF THE CONTRACTOR TO DETERMINE THE STRAP ZONE LIMIT.

* UTILITY TO BE ABANDONED & RELOCATED BY OTHERS
** FOR CONTRACTORS INFORMATION ONLY. SUBSIDIARY TO RETAINING WALL.

ESTIMATED QUANTITIES

DESCRIPTION	UNIT	SHEET TOTAL
EMBANKMENT (FINAL)(DENS CONT)(TY A)	CY	
RETAINING WALL (MSE)(TY A OR B PANEL)	SF	17,831
RETAINING WALL (MSE)(TY C PANEL)	SF	
RETAINING WALL (CIP)(TRANSITION)	SF	
PIPE UNDERDRAINS (TY 8)(8")**	LF	661
CLEANOUTS**	EA	5

STATE OF TEXAS JAMES REISER 67287 REGISTERED PROFESSIONAL ENGINEER

James Reiser 1-3-'08

NO.	DATE	REVISION	APPROV.

PRESIDENT GEORGE BUSH TURNPIKE

NTTA NORTH TEXAS TOLLWAY AUTHORITY

RETAINING WALL PLAN & PROFILE WALL W12

Parsons Brinckerhoff Quade & Douglas, Inc. 2777 Stemmons Freeway Suite 1033 Dallas, TX 75207

SECTION XXX

DRAWN CPS DATE 12-31-07 DESIGNED JR DATE 12-31-07
CHECKED JR DATE 12-31-07 SCALE 1"=100'

CONTRACT NO. 02011-PGB-06-CN-EN SHEET 443

SHEET 91 OF 112

Plotted 03-JAN-2008 20:45

Plotted By aunthukarn

DGN=G:\JOBS\22474-PGBT\Sheets\Rail\B30aWL76.dgn, ON=EO-623

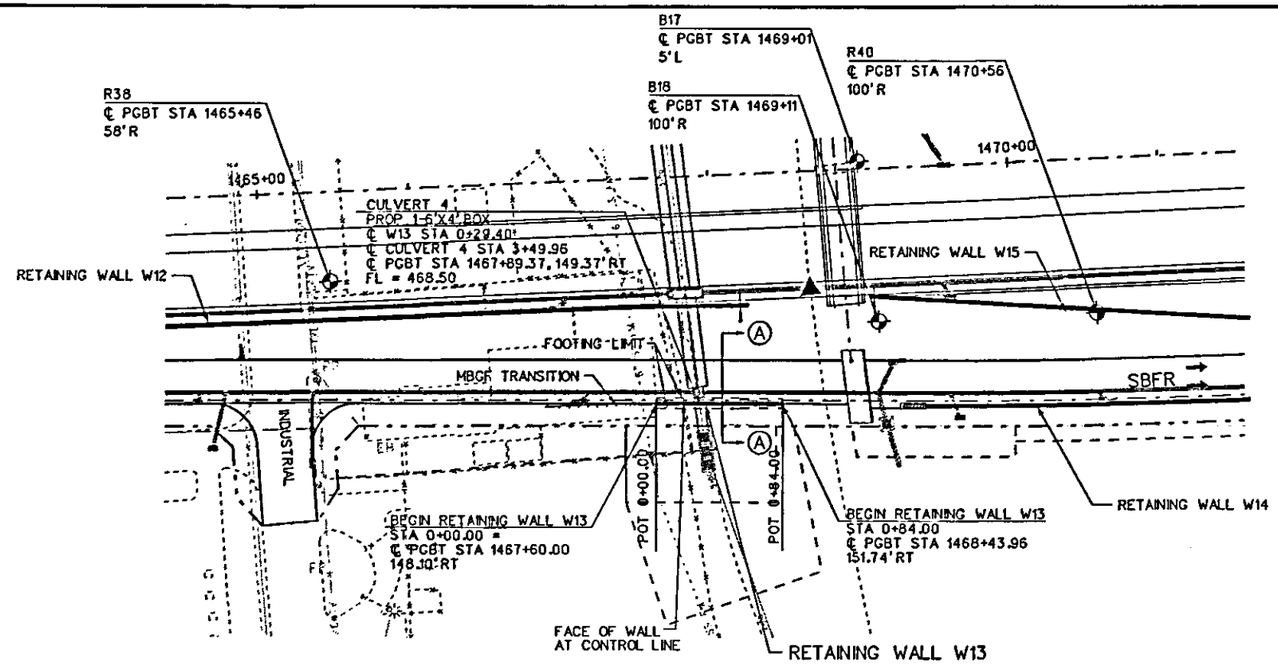

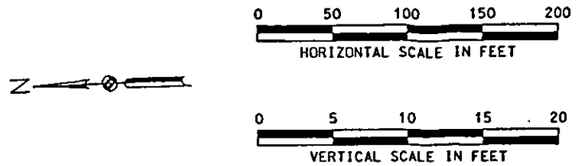

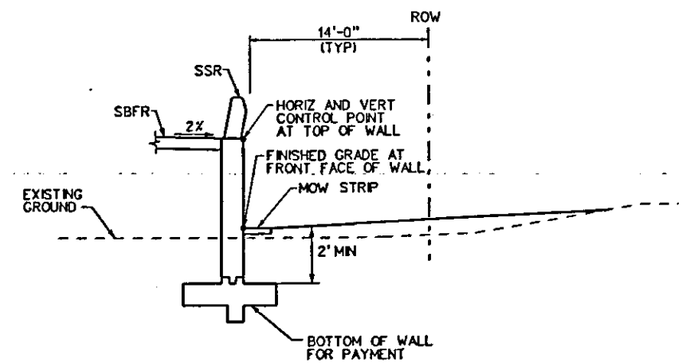

SECTION A-A
NTS

ESTIMATED QUANTITIES		
DESCRIPTION	UNIT	SHEET TOTAL
EMBANKMENT (FINAL) (DENS CONT) (TY A)	CY	
RETAINING WALL (MSE)(TY A OR B PANEL)	SF	
RETAINING WALL (MSE)(TY C PANEL)	SF	
RETAINING WALL (CIP)(TRANSITION)	SF	
PIPE UNDERDRAINS (TY 8)(6")*	LF	
CLEANOUTS*	EA	
RETAINING WALL (SPREAD FOOTING)	SF	553

* FOR CONTRACTORS INFORMATION ONLY.
SUBSIDIARY TO RETAINING WALL.

NOTES:
1. REFER TO RAILING & RIPRAP LAYOUT, DRAINAGE PLAN AND ILLUMINATION LAYOUT FOR MORE DETAILS
2. REFER TO RAILING & RIPRAP LAYOUT FOR FLUME AND MOW STRIP QUANTITIES

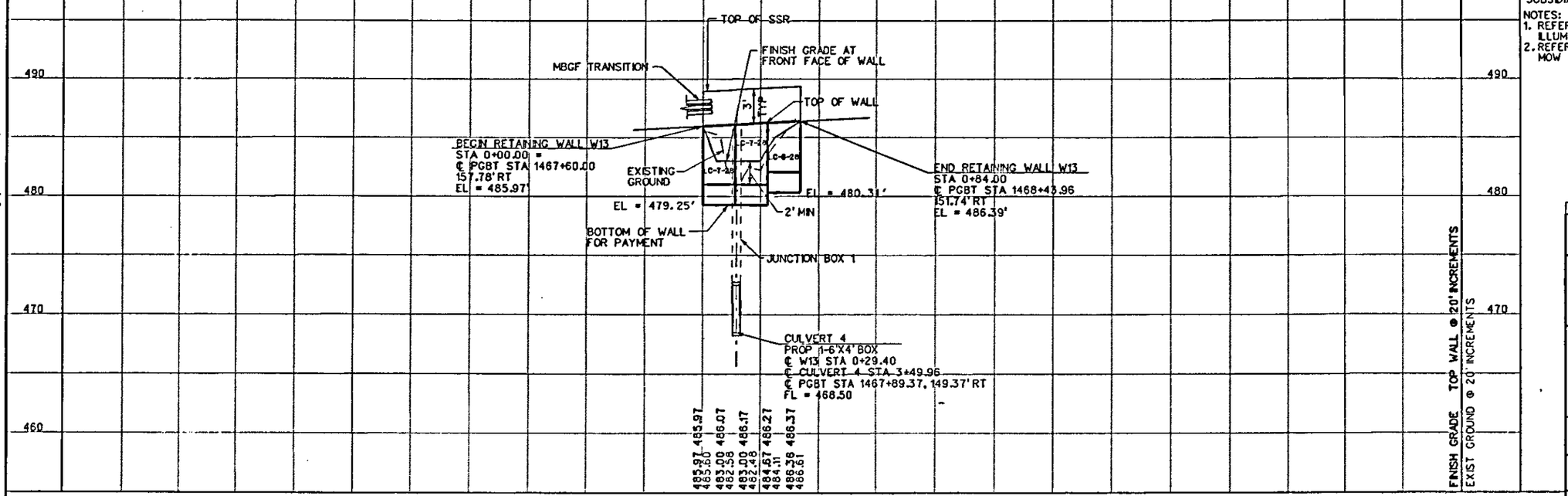

STATE OF TEXAS
JAMES REISER
67287
REGISTERED PROFESSIONAL ENGINEER
1-3-'08

NO.	DATE	REVISION	APPROV.

PRESIDENT GEORGE BUSH TURNPIKE

NTTA
NORTH TEXAS TOLLWAY AUTHORITY

RETAINING WALL
PLAN & PROFILE
WALL W13

Parsons Brinckerhoff Quade & Douglas, Inc.
2777 Stemmons Freeway
Suite 833
Dallas, TX 75207

SECTION XXX

DRAWN CPS DATE 12-31-07 DESIGNED JR DATE 12-31-07
CHECKED JR DATE 12-31-07 SCALE 1"=100'

CONTRACT NO. 02011-PGB-06-CN-EN SHEET 447

Plotted By sunthudkarn
Plotted 03-JAN-2008 20:46
DGN=G:\JOBS\22474-PGBT\Sheets\Wall\B30aWL79.dgn, ON=(0-62)
Plotted 03-JAN-2008 20:46

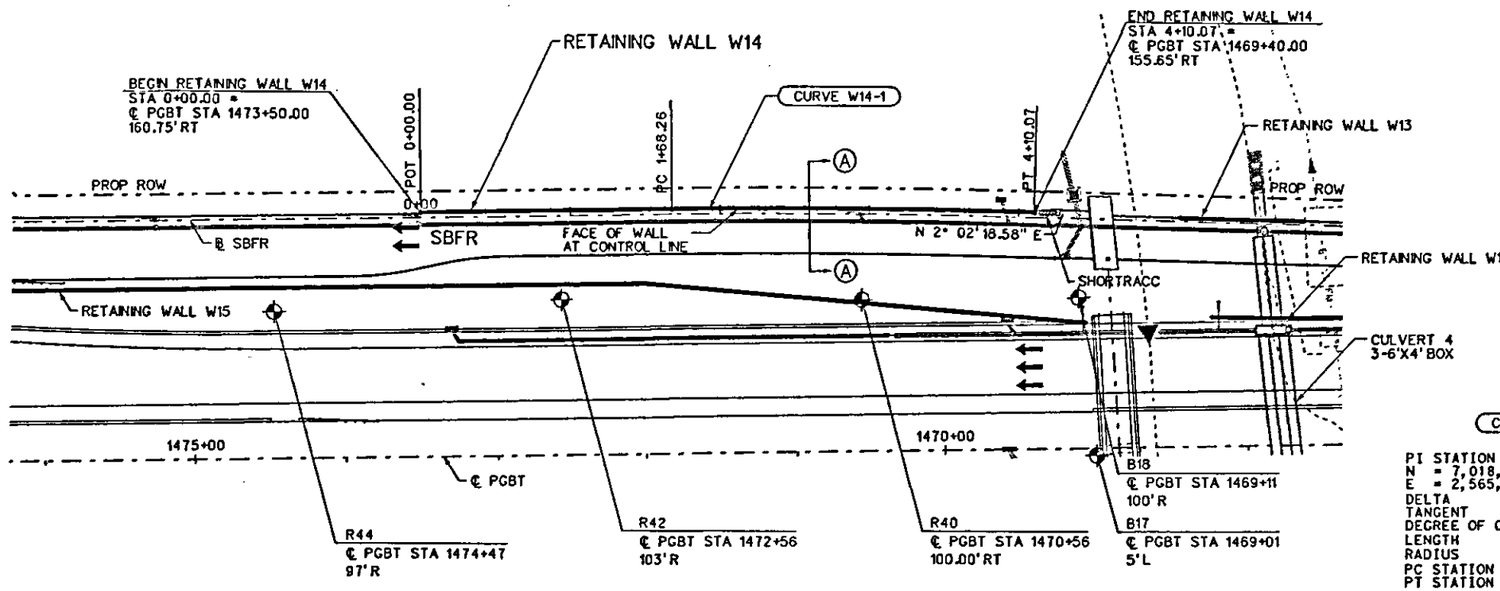

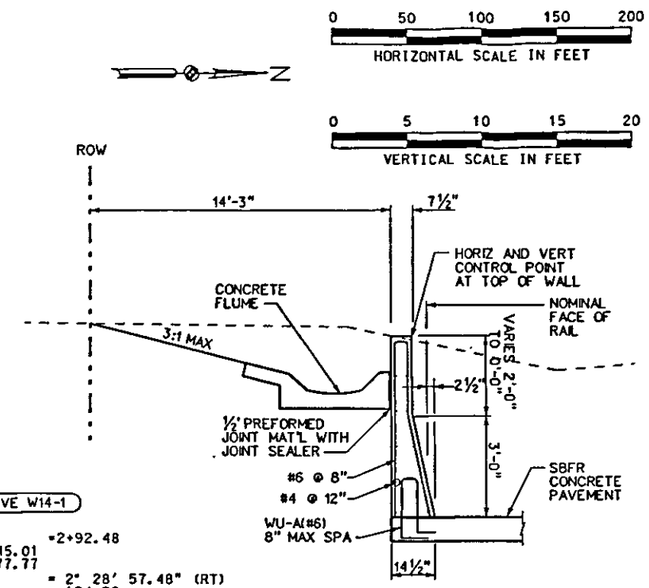

SECTION A-A

CURVE W14-1

PI STATION	=2+92.48
N	= 7,018,745.01
E	= 2,565,277.77
DELTA	= 2° 28' 57.48" (RT)
TANGENT	= 124.22
DEGREE OF CURVE	= 0° 59' 58.05"
LENGTH	= 248.40
RADIUS	= 5,732.75
PC STATION	= 1+68.26
PT STATION	= 4+16.66

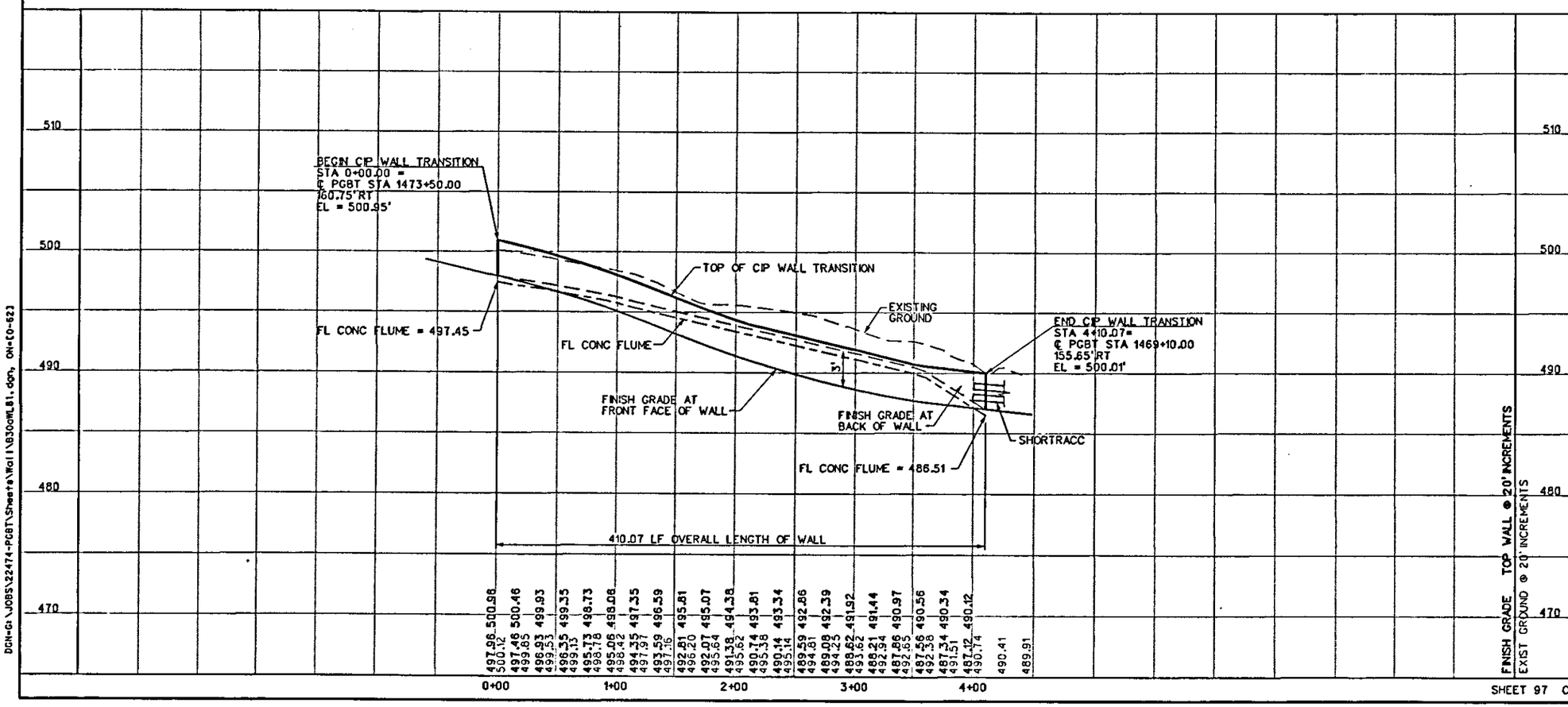

ESTIMATED QUANTITIES		
DESCRIPTION	UNIT	SHEET TOTAL
EMBANKMENT (FINAL)(DENS CONT)(TY A)	CY	
RETAINING WALL (MSE)(TY A OR B PANEL)	SF	
RETAINING WALL (MSE)(TY C PANEL)	SF	
RETAINING WALL (CIP)(TRANSITION)	SF	1,358
PIPE UNDERDRAINS (TY 8)(8")*	LF	
CLEANOUTS*	EA	

* FOR CONTRACTORS INFORMATION ONLY. SUBSIDIARY TO RETAINING WALL.

NOTES:
1. REFER TO RAILING & RIPRAP LAYOUT, DRAINAGE PLAN AND ILLUMINATION LAYOUT FOR MORE DETAILS
2. REFER TO RAILING & RIPRAP LAYOUT FOR FLUME AND MOW STRIP QUANTITIES

STATE OF TEXAS
JAMES REISER
67287
REGISTERED PROFESSIONAL ENGINEER
1-3-'08

NO.	DATE	REVISION	APPROV.

PRESIDENT GEORGE BUSH TURNPIKE

NTTA
NORTH TEXAS TOLLWAY AUTHORITY

RETAINING WALL
PLAN & PROFILE
WALL W14

Parsons Brinckerhoff Quade & Douglas, Inc.
2777 Stemmons Freeway
Suite 1033
Dallas, TX 75207

SECTION XXX

DRAWN CPS	DATE 12-31-07	DESIGNED JR	DATE 12-31-07
CHECKED JR	DATE 12-31-07	SCALE 1"=100'	

CONTRACT NO. 02011-PGB-06-CN-EN SHEET 449

Plotted By sunthudkorn
Plotted 03-JAN-2008 20:46
DGN=G:\JOBS\22474-PGBT\Sheets\Wall\B30aWL81.dgn, ON=(0-62)
Plotted 03-JAN-2008 20:46

Plotted By sunthudkorn

0 50 100 150 200
HORIZONTAL SCALE IN FEET

0 5 10 15 20
VERTICAL SCALE IN FEET

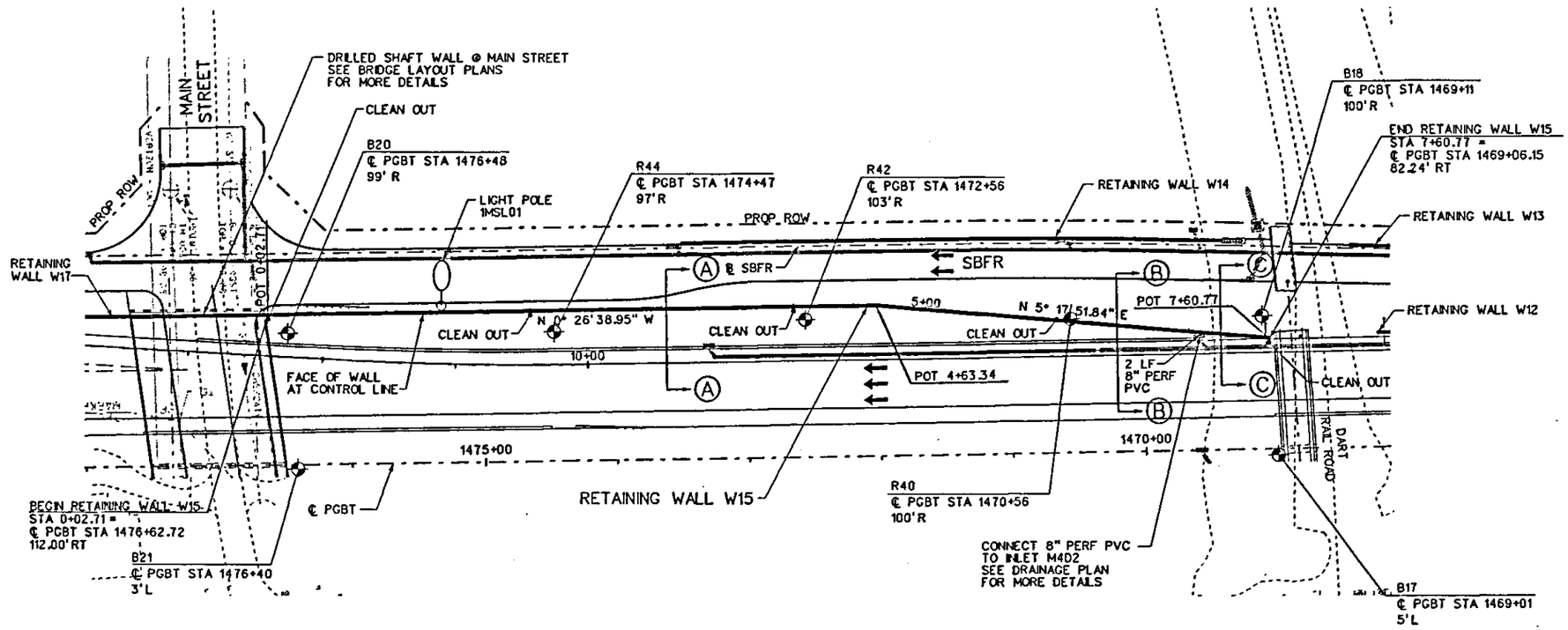

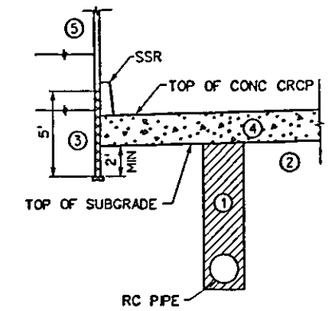

CONSTRUCTION SEQUENCES

NTS MSE WALL

CONSTRUCT ITEMS IN THE FOLLOWING ORDER

1. STORM SEWER PIPES WITH BACKFILL
2. SUBGRADE AND SELECTED FILL (IF REQUIRED)
3. FIRST 5 FT PANEL OF RETAINING WALL
4. BASE AND CONCRETE CRCP
5. THE REST OF RETAINING WALL AND RAILS

NOTES:
1. REFER TO RAILING & RIPRAP LAYOUT, DRAINAGE PLAN AND ILLUMINATION LAYOUT FOR MORE DETAILS
2. REFER TO RAILING & RIPRAP LAYOUT FOR FLUME AND MOW STRIP QUANTITIES
3. USE A MINIMUM REINFORCED SECTION WIDTH TO HEIGHT RATIO OF 1:1 FOR ALL MSE WALLS
4. CONTRACTOR SHALL INSTALL/CONSTRUCT DRILL SHAFTS FOR ILLUMINATIONS, CCTV TOWERS, TRAFFIC SIGNAL POLES AND GUIDE SIGN BRIDGE COLUMNS THAT ARE WITHIN THE MSE STRAP ZONE PRIOR TO INSTALLING THE MSE STRAPS. IT SHALL BE THE RESPONSIBILITY OF THE CONTRACTOR TO DETERMINE THE STRAP ZONE LIMIT.

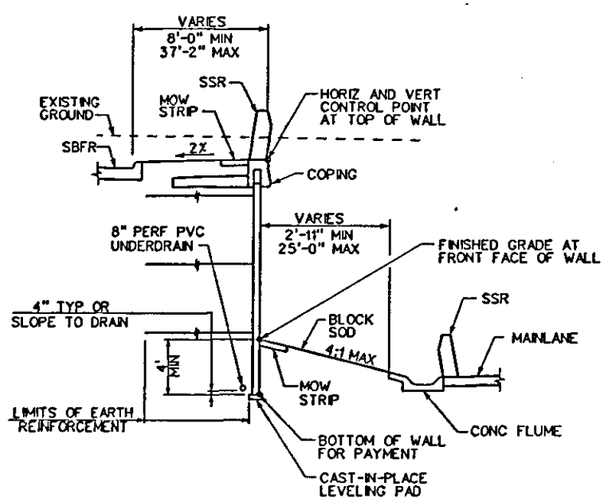

SECTION A-A
NTS MSE WALL

STA 0+02.71 TO STA 5+86.05

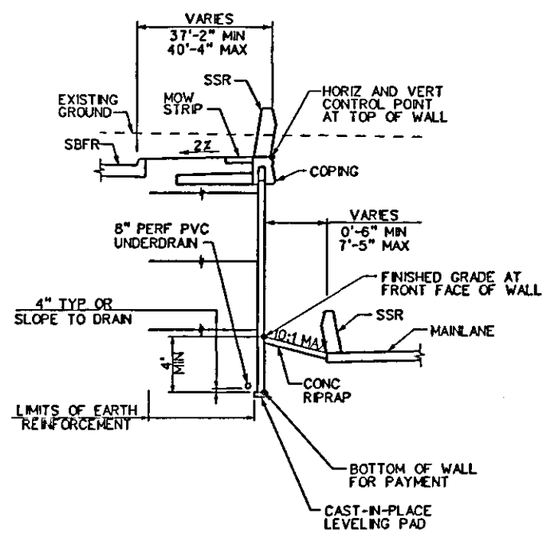

SECTION B-B
NTS MSE WALL

STA 6+36.30 TO STA 7+60.77

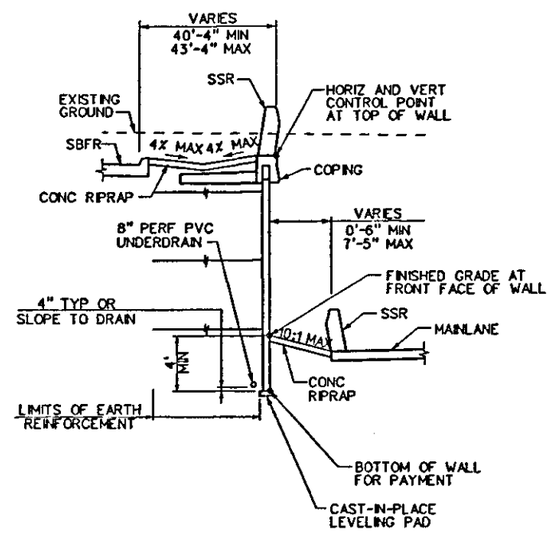

SECTION B-B
NTS MSE WALL

STA 6+36.30 TO STA 7+60.77

STATE OF TEXAS
JAMES REISER
67287
REGISTERED PROFESSIONAL ENGINEER
1-3-'08

NO.	DATE	REVISION	APPROV.

PRESIDENT GEORGE BUSH TURNPIKE

NTTA
NORTH TEXAS TOLLWAY AUTHORITY

RETAINING WALL PLAN & PROFILE
WALL W15

Parsons Brinckerhoff Quade & Douglas, Inc.
2777 Stemmons Freeway
Suite 1313
Dallas, TX 75207

SECTION XXX

DRAWN CPS DATE 12-31-07 DESIGNED JR DATE 12-31-07
CHECKED JR DATE 12-31-07 SCALE 1"=100'

CONTRACT NO. 02011-PGB-06-CN-EN SHEET 451

Plotted 03-JAN-2008 20:46
DGN=G:\JOBS\22474-PGBT\Sheets\Wall\B30oWL83.dgn, ON=(0-62)

Plotted 03-JAN-2008 20:46

DGN=G:\JOBS\22474-PGBT\Sheets\Drainage\B30aDW01.dgn, ON=[0-2, 4, 5, 10-62]

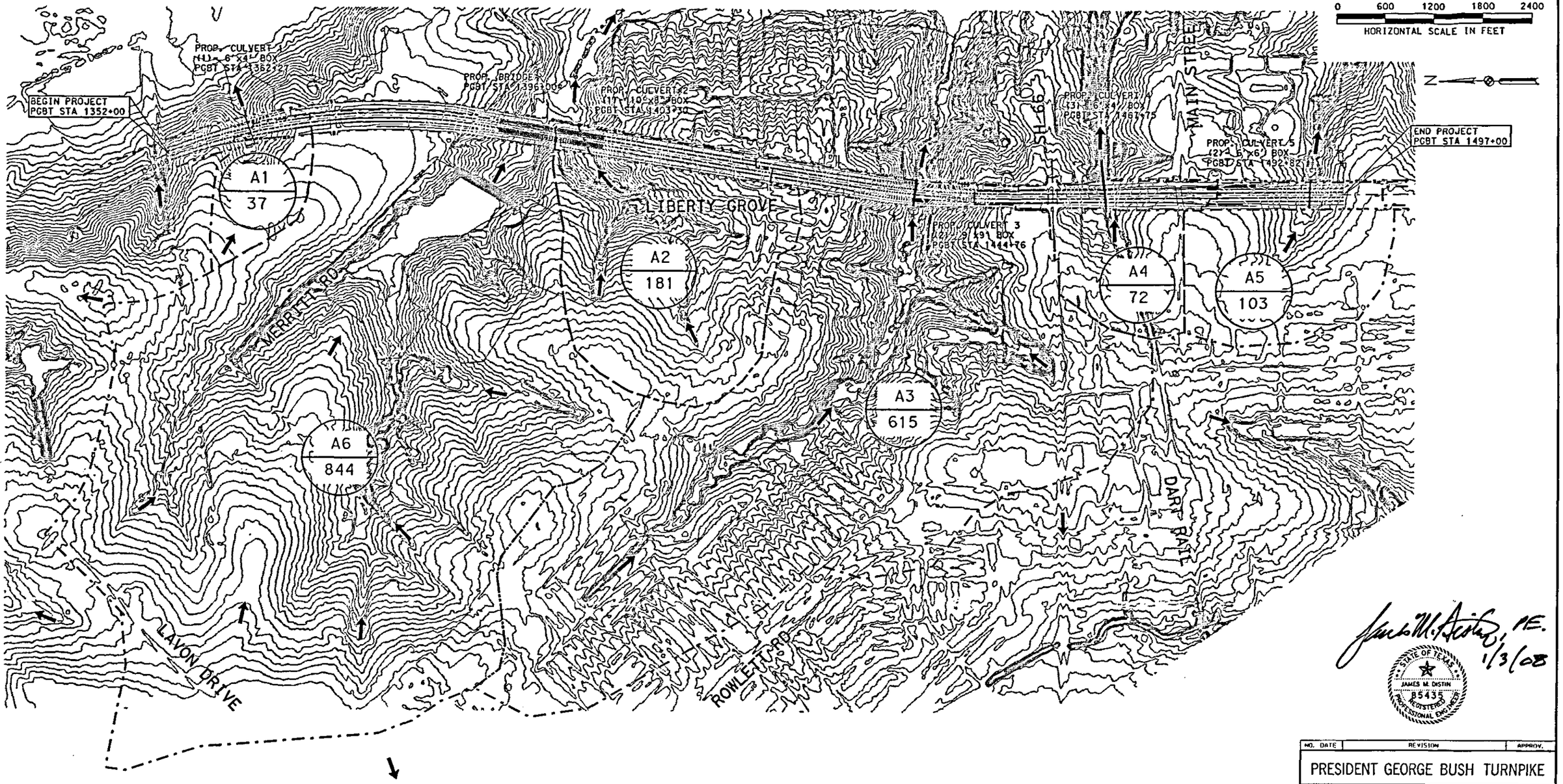

James M. Distin, P.E.
1/3/08

STATE OF TEXAS
JAMES M. DISTIN
85435
REGISTERED
PROFESSIONAL ENGINEER

LEGEND

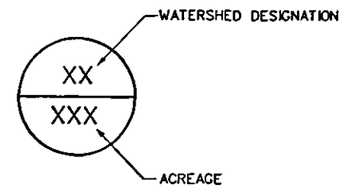

NO.	DATE	REVISION	APPROV.

PRESIDENT GEORGE BUSH TURNPIKE

NTTA
NORTH TEXAS TOLLWAY AUTHORITY

CULVERT/ CREEK DRAINAGE AREA MAP

Parsons Brinckerhoff Quade & Douglas, Inc.
2777 Stemmons Freeway
Suite 833
Dallas, TX 75207

SECTION XXX

DRAWN CPS DATE 12-31-07 DESIGNED JD DATE 12-31-07
CHECKED JD DATE 12-31-07 SCALE 1"=1200'

CONTRACT NO. 02011-PGB-06-CN-EN SHEET 497

SHEET 1 OF 1

Plotted 03-JAN-2008 12:26

Plotted By mkorman

Plotted 03-JAN-2008 12:26
DGN=G:\JOBS\22474-PGBT\Sheets\Drainage\B30aDW01.dgn, ON=[0-2, 4, 5, 10-62]

Plotted By mekannan

CULVERT HYDRAULIC DATA

CULVERT No.	STATION	DRAINAGE AREA (acre)	SIZE	LENGTH (ft)	DS CHAN "n"	FREQ=50 YEAR TW Q_{50} (cfs)	TW ELEV (ft)	TW DEPTH (ft)	CULVERT HW (ft)	CULVERT US HEAD (ft)	CULVERT VEL (fps)	FREQ=100 YEAR TW Q_{100} (cfs)	TW ELEV (ft)	TW DEPTH (ft)	CULVERT HW (ft)	CULVERT US HEAD (ft)	CULVERT VEL (fps)	CULVERT K_e	CULVERT n	CULVERT US FL	CULVERT DS FL	CULVERT SLOPE (ft/ft)	ALLOW. HW_A <
Structure #1	1362+27	37	1-6'x4'	351	0.045	222	461.76	2.00	468.81	6.95	12.50	252	461.90	2.14	469.97	8.11	12.89	0.7	0.012	461.86	459.76	0.60%	471.3
Structure #2	1403+30	181	1-10'x8'	384	0.045	1123	451.08	3.68	461.87	13.29	14.04	1279	451.20	3.80	463.86	15.28	15.55	0.7	0.012	448.58	447.40	0.31%	463.1
Structure #3	1444+43	615	2-9'x9'	323	0.045	2193	447.71	5.41	457.24	13.94	15.77	2473	448.23	5.93	458.90	15.60	15.27	0.7	0.012	443.30	442.30	0.31%	468.7
Structure #4	1467+75	72	3-6'x4'	495	0.045	552	458.11	3.80	460.65	5.33	7.67	629	458.38	4.07	460.09	6.77	8.74	0.7	0.012	455.32	454.31	0.19%	462.4
Structure #5	1492+82	103	2-6'x6'	357	0.045	630	474.52	4.52	485.47	7.90	11.61	717	474.81	4.81	486.56	8.99	12.43	0.7	0.012	477.57	470.00	2.12%	491.8

CULVERT HYDROLOGIC DATA

ACRES DRAINED AREA NO.	AREA(acres)	RUNOFF Coeff "C"	TOTALCA	Cf(50)	Cf(100)	TcACTUAL (min)	TcUSED (min)	I (50) (in/hr)	Q (50) (cfs)	I (100) (in/hr)	Q (100) (cfs)	REMARKS
1	37	0.60	22.20	1.2	1.25	16.8	16.8	8.32	222	9.09	252	SINGLE CULVERT
2	181	0.71	128.51	1.2	1.25	21.6	21.6	7.28	1123	7.96	1279	SINGLE CULVERT
3	615	N/A	N/A	1.2	1.25	N/A	N/A	N/A	N/A	N/A	N/A	MULTI-BOX CULVERT (SEE NOTES)
4	72	0.74	53.28	1.2	1.25	15.6	15.6	8.63	552	9.44	629	MULTI-BOX CULVERT
5	103	0.70	72.10	1.2	1.25	21.6	21.6	7.28	630	7.96	717	MULTI-BOX CULVERT
6	844	N/A	N/A	N/A	N/A	N/A	N/A	N/A	N/A	N/A	N/A	MULTI-SPAN BRIDGE (SEE NOTES)

NOTES:

TR-55 METHOD IS USED FOR AREA 3 AND AREA 6. DETAILED CALCULATIONS ARE LISTED IN THE HYDRAULIC REPORT AND SUMMARIZED AS FOLLOWS:

BASIN 3
Q_{50}= 2193 cfs
Q_{100}= 2473 cfs

BASIN 6
Q_{50}= 2478 cfs
Q_{100}= 2788 cfs

STRUCTURE #5 IS A BROKEN BACK CULVERT AT CULVERT STATION 2+19.47 WITH ELEVATION 470.68
STRUCTURE #1 AND #5 ARE IN INLET CONTROL AND ALL OTHERS ARE IN OUTLET CONTROL

James M. Distin, P.E. 1/3/08

STATE OF TEXAS JAMES M. DISTIN 85435 REGISTERED PROFESSIONAL ENGINEER

NO.	DATE	REVISION	APPROV.

PRESIDENT GEORGE BUSH TURNPIKE

NTTA NORTH TEXAS TOLLWAY AUTHORITY

CULVERT HYDROLOGIC AND HYDRAULIC DATA

Parsons Brinckerhoff Quade & Douglas, Inc. 2777 Stemmons Freeway Suite 1033 Dallas, TX 75207

SECTION XXX

DRAWN CPS DATE 12-31-07 DESIGNED JD DATE 12-31-07
CHECKED JD DATE 12-31-07 SCALE N/A

CONTRACT NO. 02011-PGB-06-CN-EN SHEET 498

SHEET 1 OF 1

Plotted 03-JAN-2008 13:37
DGN=gr\Jobs\22474-PGBT\Sheets\Drainage\B30aDM01a.dgn, ON=[1-62, 64]

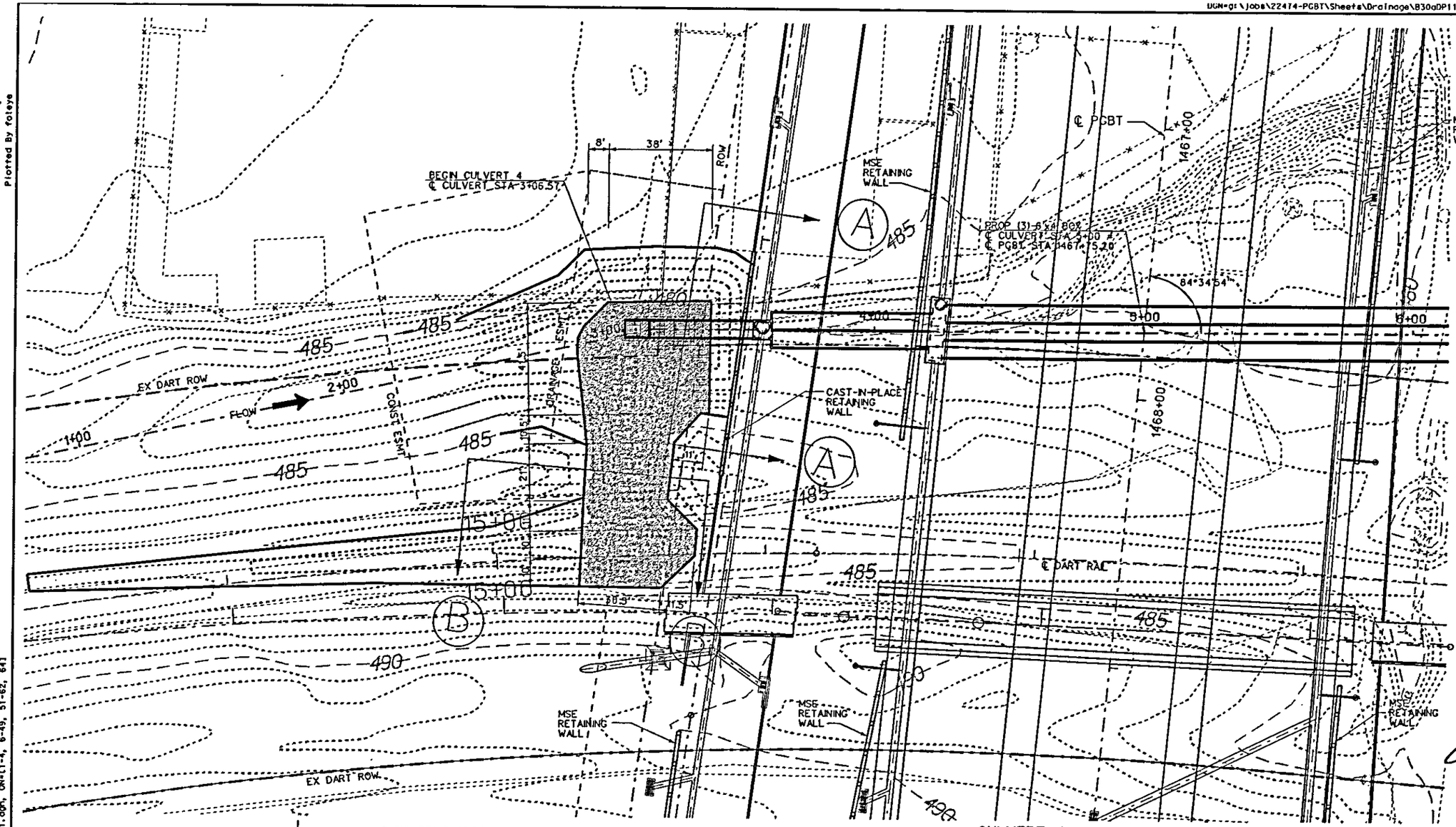

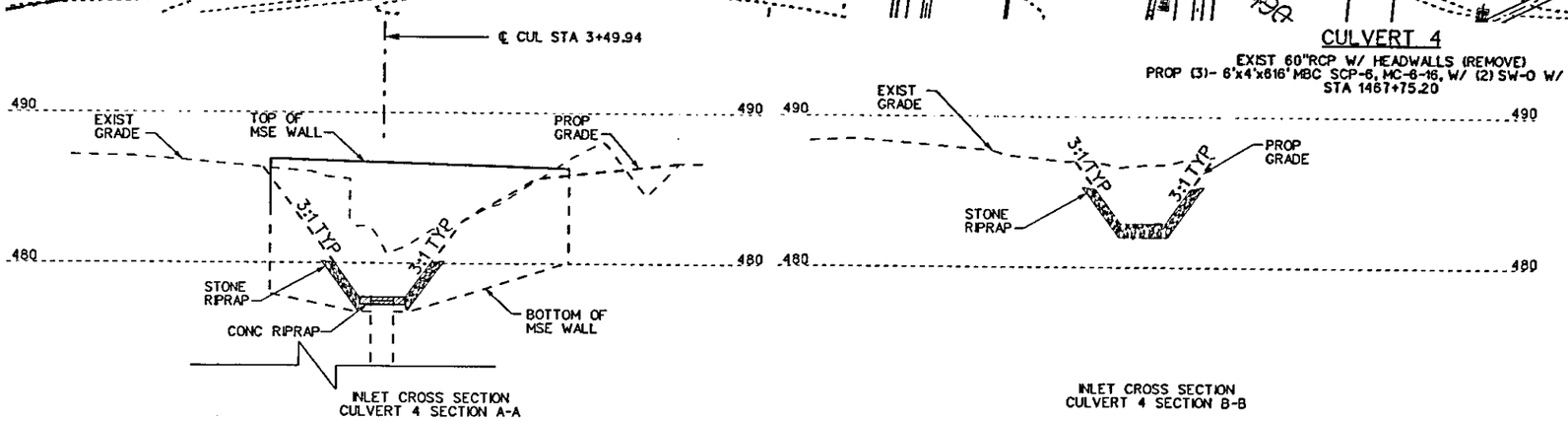

CULVERT 4

EXIST 60"RCP W/ HEADWALLS (REMOVE)
PROP (3)- 6'x4'x616' MBC SCP-6, MC-6-16, W/ (2) SW-0 W/ (1) ECD
STA 1467+75.20

SHEET 5 OF 7

James M. Distin P.E. 1/3/02

STATE OF TEXAS
JAMES M. DISTIN
85435
REGISTERED
PROFESSIONAL ENGINEER

NO.	DATE	REVISION	APPROV.

PRESIDENT GEORGE BUSH TURNPIKE

NTTA
NORTH TEXAS TOLLWAY AUTHORITY

CULVERT GRADING LAYOUT
CULVERT 4
STA 1467+75.20

Parsons Brinckerhoff Quade & Douglas, Inc.
2777 Stemmons Freeway
Suite 833
Dallas, TX 75207

SECTION XXX

DRAWN CPS DATE 12-31-07 DESIGNED JD DATE 12-31-07
CHECKED JD DATE 12-31-07 SCALE 1"=40'

CONTRACT NO. 02011-PGB-06-CN-EN SHEET 509

Plotted By foteye

Plotted 03-JAN-2008 19:29
DGN=g:\Jobs\22474-PGBT\Sheets\Drainage\B30aDP11.dgn, ON=[1-4, 6-49, 51-62, 64]

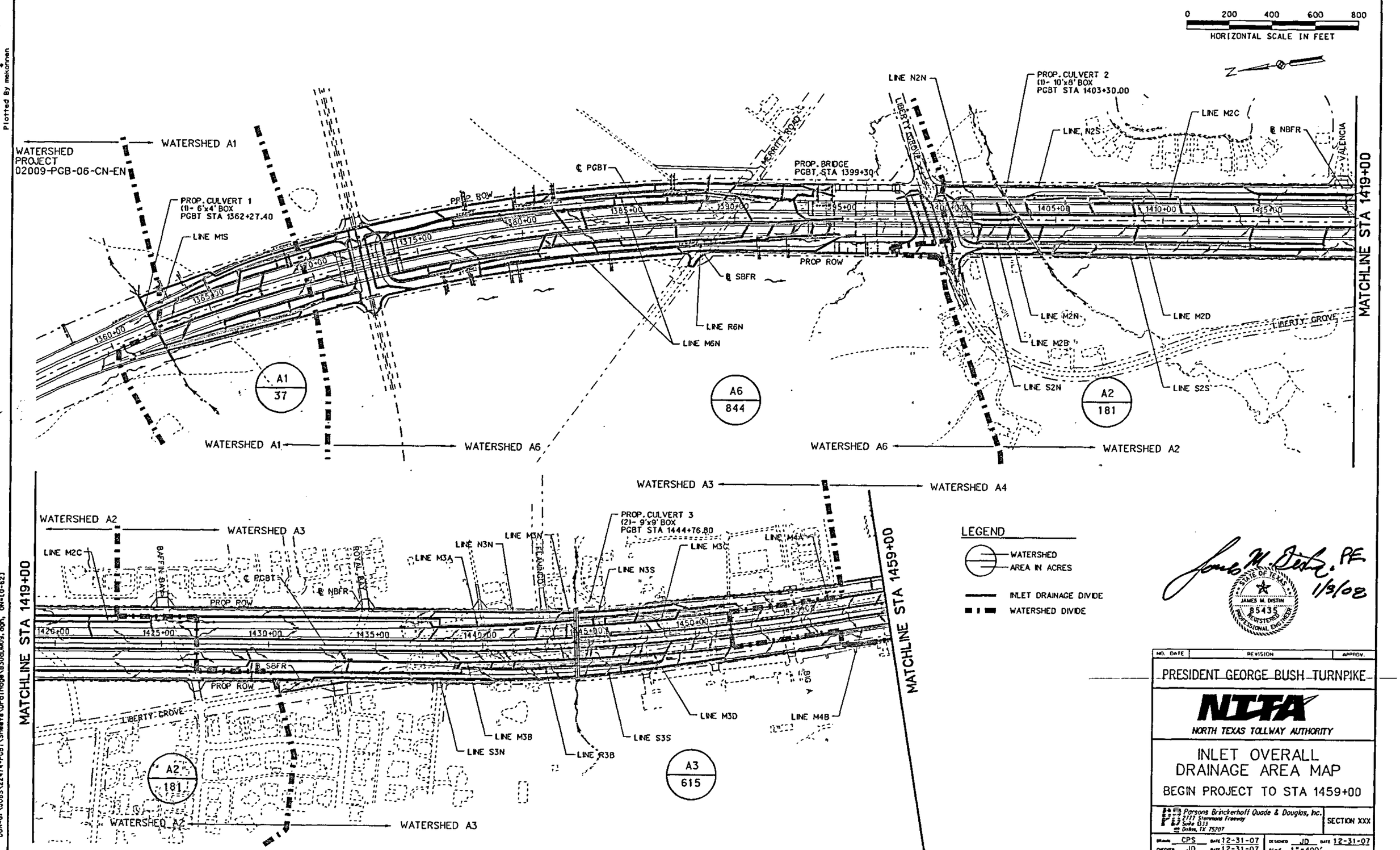

James M. Distin, P.E. 1/3/08

STATE OF TEXAS JAMES M. DISTIN 85435 REGISTERED PROFESSIONAL ENGINEER

NO.	DATE	REVISION	APPROV.

PRESIDENT GEORGE BUSH TURNPIKE

NTTA NORTH TEXAS TOLLWAY AUTHORITY

INLET OVERALL DRAINAGE AREA MAP

BEGIN PROJECT TO STA 1459+00

Parsons Brinckerhoff Quade & Douglas, Inc.
2777 Stemmons Freeway
Suite 633
Dallas, TX 75207

SECTION XXX

DRAWN CPS DATE 12-31-07 DESIGNED JD DATE 12-31-07
CHECKED JD DATE 12-31-07 SCALE 1"=400'

CONTRACT NO. 02011-PGB-06-CN-EN SHEET 513

SHEET 1 OF 2

Plotted 03-JAN-2008 12:27

Plotted By mekonnen

Plotted 03-JAN-2008 12:27
DGN=G:\JOBS\22474-PGBT\Sheets\Drainage\B30aDM03.dgn, ON=[0-62]

Plotted By mekohnen
Plotted 03-JAN-2008 12:27
DGN=G:\JOBS\22474-PGBT\Sheets\Drainage\B300DM10.dgn, ON=EO-61, 63]

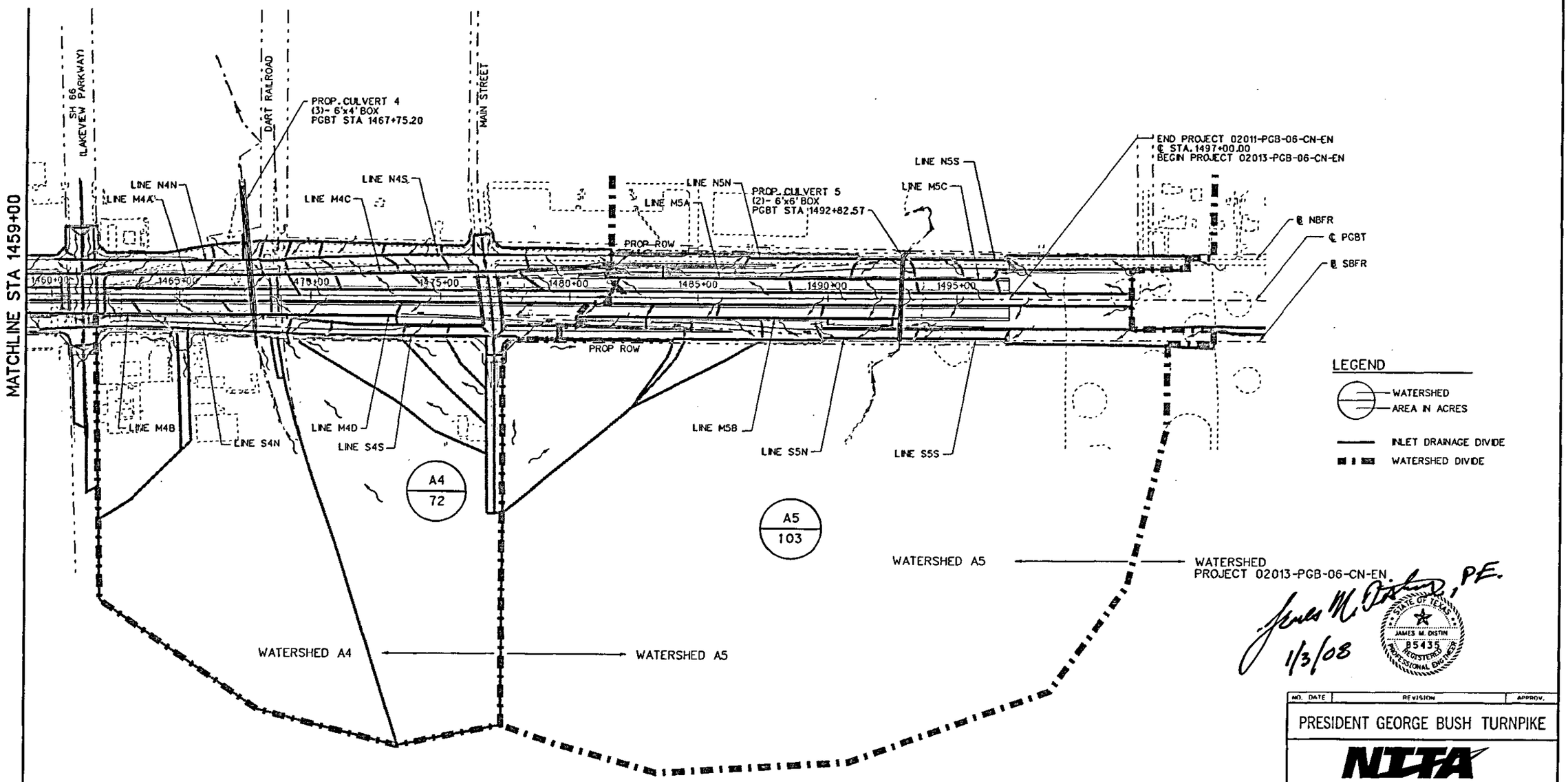

James M. Distin, P.E.
1/3/08
STATE OF TEXAS
JAMES M. DISTIN
85435
REGISTERED
PROFESSIONAL ENGINEER

NO.	DATE	REVISION	APPROV.

PRESIDENT GEORGE BUSH TURNPIKE

NTTA
NORTH TEXAS TOLLWAY AUTHORITY

INLET OVERALL DRAINAGE AREA MAP

STA 1459+00 TO END OF PROJECT

Parsons Brinckerhoff Quade & Douglas, Inc.
2777 Stemmons Freeway
Suite 1313
Dallas, TX 75207

SECTION XXX

DRAWN CPS DATE 12-31-07 DESIGNED JD DATE 12-31-07
CHECKED JD DATE 12-31-07 SCALE 1"=400'

CONTRACT NO. 02011-PGB-06-CN-EN SHEET 5/4

SHEET 2 OF 2

Plotted 03-JAN-2008 12:27

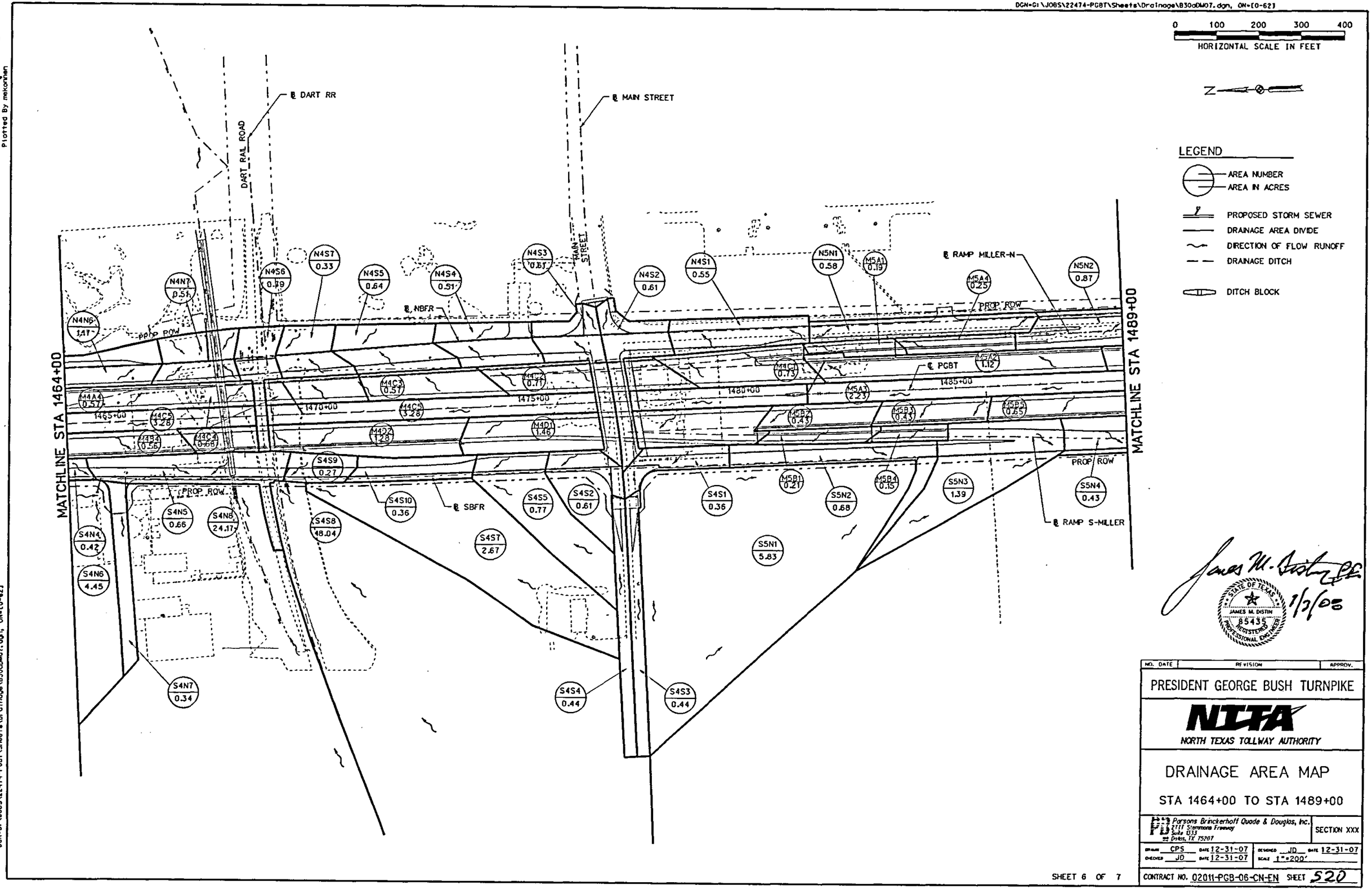

James M. Distin P.E. 1/3/08

STATE OF TEXAS
JAMES M. DISTIN
85435
REGISTERED
PROFESSIONAL ENGINEER

NO.	DATE	REVISION	APPROV.

PRESIDENT GEORGE BUSH TURNPIKE

NTTA
NORTH TEXAS TOLLWAY AUTHORITY

DRAINAGE AREA MAP

STA 1464+00 TO STA 1489+00

Parsons Brinckerhoff Quade & Douglas, Inc.
2111 Stemmons Freeway
Suite 033
Dallas, TX 75207

SECTION XXX

DRAWN CPS DATE 12-31-07 DESIGNED JD DATE 12-31-07
CHECKED JD DATE 12-31-07 SCALE 1"=200'

CONTRACT NO. 02011-PGB-06-CN-EN SHEET 520

Plotted 03-JAN-2008 12:26

Plotted By mekonnen

Plotted 03-JAN-2008 12:26
DGN=G:\JOBS\22474-PGBT\Sheets\Drainage\B30aDM07.dgn, ON=(0-62)

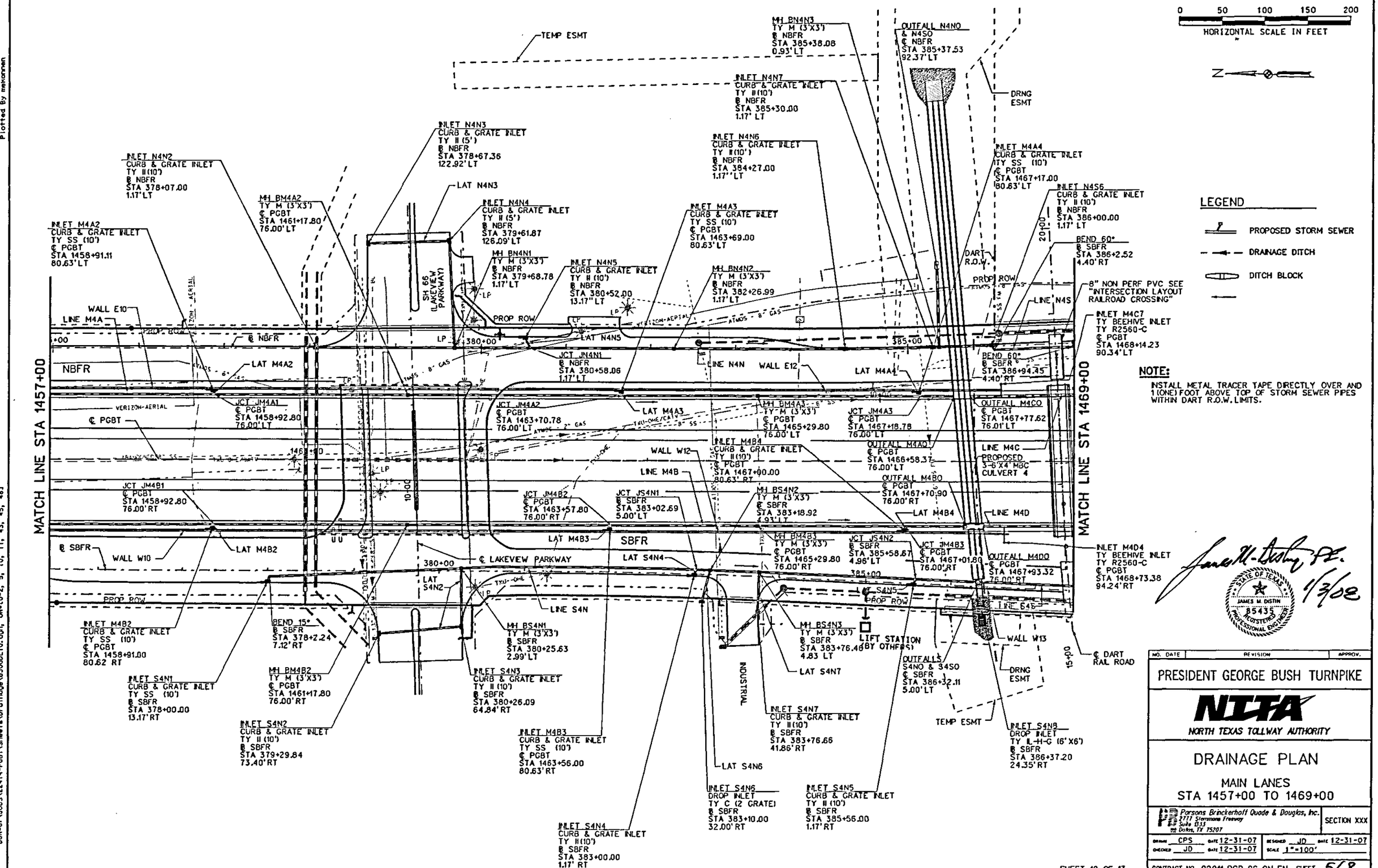
0 50 100 150 200
HORIZONTAL SCALE IN FEET
N
TEMP ESMT
MH BN4N3 TY M (3'X3') ℄ NBFR STA 385+38.08 0.93' LT
OUTFALL N4NO & N4SO ℄ NBFR STA 385+37.53 92.37' LT
INLET N4N7 CURB & GRATE INLET TY II (10') ℄ NBFR STA 385+30.00 1.17' LT
DRNG ESMT
INLET N4N3 CURB & GRATE INLET TY II (5') ℄ NBFR STA 378+67.36 122.92' LT
INLET N4N6 CURB & GRATE INLET TY II (10') ℄ NBFR STA 384+27.00 1.17' LT
INLET M4A4 CURB & GRATE INLET TY SS (10') ℄ PGBT STA 1467+17.00 80.63' LT
INLET N4N2 CURB & GRATE INLET TY II (10') ℄ NBFR STA 378+07.00 1.17' LT
LAT N4N3
MH BM4A2 TY M (3'X3') ℄ PGBT STA 1461+17.80 76.00' LT
INLET N4N4 CURB & GRATE INLET TY II (5') ℄ NBFR STA 379+61.87 126.09' LT
INLET M4A3 CURB & GRATE INLET TY SS (10') ℄ PGBT STA 1463+69.00 80.63' LT
INLET N4S6 CURB & GRATE INLET TY II (10') ℄ NBFR STA 386+00.00 1.17' LT
INLET M4A2 CURB & GRATE INLET TY SS (10') ℄ PGBT STA 1458+91.11 80.63' LT
MH BN4N1 TY M (3'X3') ℄ NBFR STA 379+68.78 1.17' LT
INLET N4N5 CURB & GRATE INLET TY II (10') ℄ NBFR STA 380+52.00 13.17' LT
MH BN4N2 TY M (3'X3') ℄ NBFR STA 382+26.99 1.17' LT
BEND 60° ℄ SBFR STA 386+2.52 4.40' RT
DART R.O.W.
PROP ROW
8" NON PERF PVC SEE "INTERSECTION LAYOUT RAILROAD CROSSING"
LINE N4S
WALL E10
LINE M4A
SH 66 (LAKEVIEW PARKWAY)
INLET M4C7 TY BEEHIVE INLET TY R2560-C ℄ PGBT STA 1468+14.23 90.34' LT
℄ NBFR
LAT N4N5
JCT JN4N1 ℄ NBFR STA 380+58.06 1.17' LT
LINE N4N
WALL E12
BEND 60° ℄ SBFR STA 386+94.45 4.40' RT
NBFR
LAT M4A2
LAT M4A4
JCT M4A1 ℄ PGBT STA 1458+92.80 76.00' LT
JCT JM4A2 ℄ PGBT STA 1463+70.78 76.00' LT
LAT M4A3
MH BM4A3 TY M (3'X3') ℄ PGBT STA 1465+29.80 76.00' LT
JCT JM4A3 ℄ PGBT STA 1467+18.78 76.00' LT
OUTFALL M4CO ℄ PGBT STA 1467+77.62 76.01' LT
℄ PGBT
INLET M4B4 CURB & GRATE INLET TY II (10') ℄ PGBT STA 1467+00.00 80.63' RT
WALL W12
OUTFALL M4AO ℄ PGBT STA 1466+58.37 76.00' LT
LINE M4C
PROPOSED 3-6'X4' MBC CULVERT 4
LINE M4B
OUTFALL M4BO ℄ PGBT STA 1467+70.90 76.00' RT
MATCH LINE STA 1457+00
MATCH LINE STA 1469+00
JCT JM4B1 ℄ PGBT STA 1458+92.80 76.00' RT
JCT JM4B2 ℄ PGBT STA 1463+57.80 76.00' RT
JCT JS4N1 ℄ SBFR STA 383+02.69 5.00' LT
MH BS4N2 TY M (3'X3') ℄ SBFR STA 383+18.92 4.93' LT
LAT M4B4
LINE M4D
℄ SBFR
WALL W10
LAT M4B2
LAT M4B3
SBFR
MH BM4B3 TY M (3'X3') ℄ PGBT STA 1465+29.80 76.00' RT
JCT JS4N2 ℄ SBFR STA 385+58.67 4.96' LT
JCT JM4B3 ℄ PGBT STA 1467+01.80 76.00' RT
OUTFALL M4DO ℄ PGBT STA 1467+93.32 76.00' RT
INLET M4D4 TY BEEHIVE INLET TY R2560-C ℄ PGBT STA 1468+73.38 94.24' RT
380+00
℄ LAKEVEW PARKWAY
LAT S4N4
LAT S4N2
385+00
LAT S4N5
PROP ROW
LINE S4N
LINE S4E
INLET M4B2 CURB & GRATE INLET TY SS (10') ℄ PGBT STA 1458+91.00 80.62' RT
BEND 15° ℄ SBFR STA 378+2.24 7.12' RT
MH BS4N1 TY M (3'X3') ℄ SBFR STA 380+25.63 2.99' LT
MH BS4N3 TY M (3'X3') ℄ SBFR STA 383+76.46 4.83' LT
LIFT STATION (BY OTHERS)
WALL W13
℄ DART RAIL ROAD
15+00
INDUSTRIAL
OUTFALLS S4NO & S4SO ℄ SBFR STA 386+32.11 5.00' LT
LAT S4N7
DRNG ESMT
INLET S4N1 CURB & GRATE INLET TY SS (10') ℄ SBFR STA 378+00.00 13.17' RT
MH BM4B2 TY M (3'X3') ℄ PGBT STA 1461+17.80 76.00' RT
INLET S4N3 CURB & GRATE INLET TY II (10') ℄ SBFR STA 380+26.09 64.84' RT
INLET S4N7 CURB & GRATE INLET TY II (10') ℄ SBFR STA 383+76.66 41.86' RT
TEMP ESMT
INLET S4N8 DROP INLET TY IL-H-G (6'X6') ℄ SBFR STA 386+37.20 24.35' RT
INLET S4N2 CURB & GRATE INLET TY II (10') ℄ SBFR STA 379+29.84 73.40' RT
INLET M4B3 CURB & GRATE INLET TY SS (10') ℄ PGBT STA 1463+56.00 80.63' RT
LAT S4N6
INLET S4N6 DROP INLET TY C (2 GRATE) ℄ SBFR STA 383+10.00 32.00' RT
INLET S4N5 CURB & GRATE INLET TY II (10') ℄ SBFR STA 385+56.00 1.17' RT
INLET S4N4 CURB & GRATE INLET TY II (10') ℄ SBFR STA 383+00.00 1.17' RT
LEGEND
PROPOSED STORM SEWER
DRAINAGE DITCH
DITCH BLOCK
NOTE:
INSTALL METAL TRACER TAPE DIRECTLY OVER AND 1 (ONE) FOOT ABOVE TOP OF STORM SEWER PIPES WITHIN DART R.O.W. LIMITS.
STATE OF TEXAS JAMES M. DISTIN 85435 REGISTERED PROFESSIONAL ENGINEER
1/3/08
NO. DATE REVISION APPROV.
PRESIDENT GEORGE BUSH TURNPIKE
NTTA NORTH TEXAS TOLLWAY AUTHORITY
DRAINAGE PLAN
MAIN LANES
STA 1457+00 TO 1469+00
Parsons Brinckerhoff Quade & Douglas, Inc. 2711 Stemmons Freeway Suite 833 Dallas, TX 75207
SECTION XXX
DRAWN CPS DATE 12-31-07 DESIGNED JD DATE 12-31-07
CHECKED JD DATE 12-31-07 SCALE 1"=100'
CONTRACT NO. 02011-PGB-06-CN-EN SHEET 568
SHEET 10 OF 13

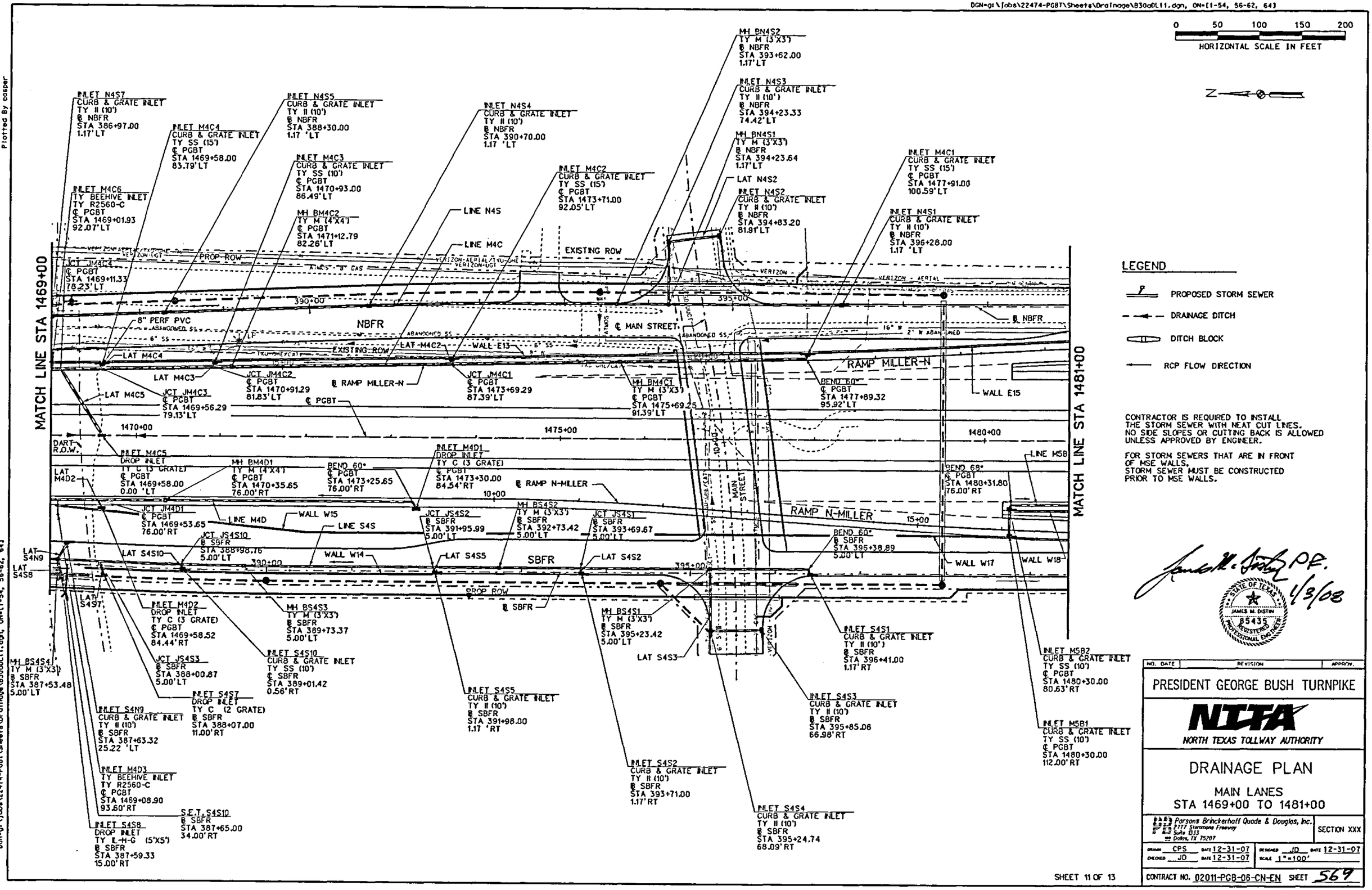

Plotted By casper
Plotted 03-JAN-2008 16:59
DGN=gi\Jobs\22474-PGBT\Sheets\Drainage\B30a0L11.dgn, ON=[1-54, 56-62, 64]

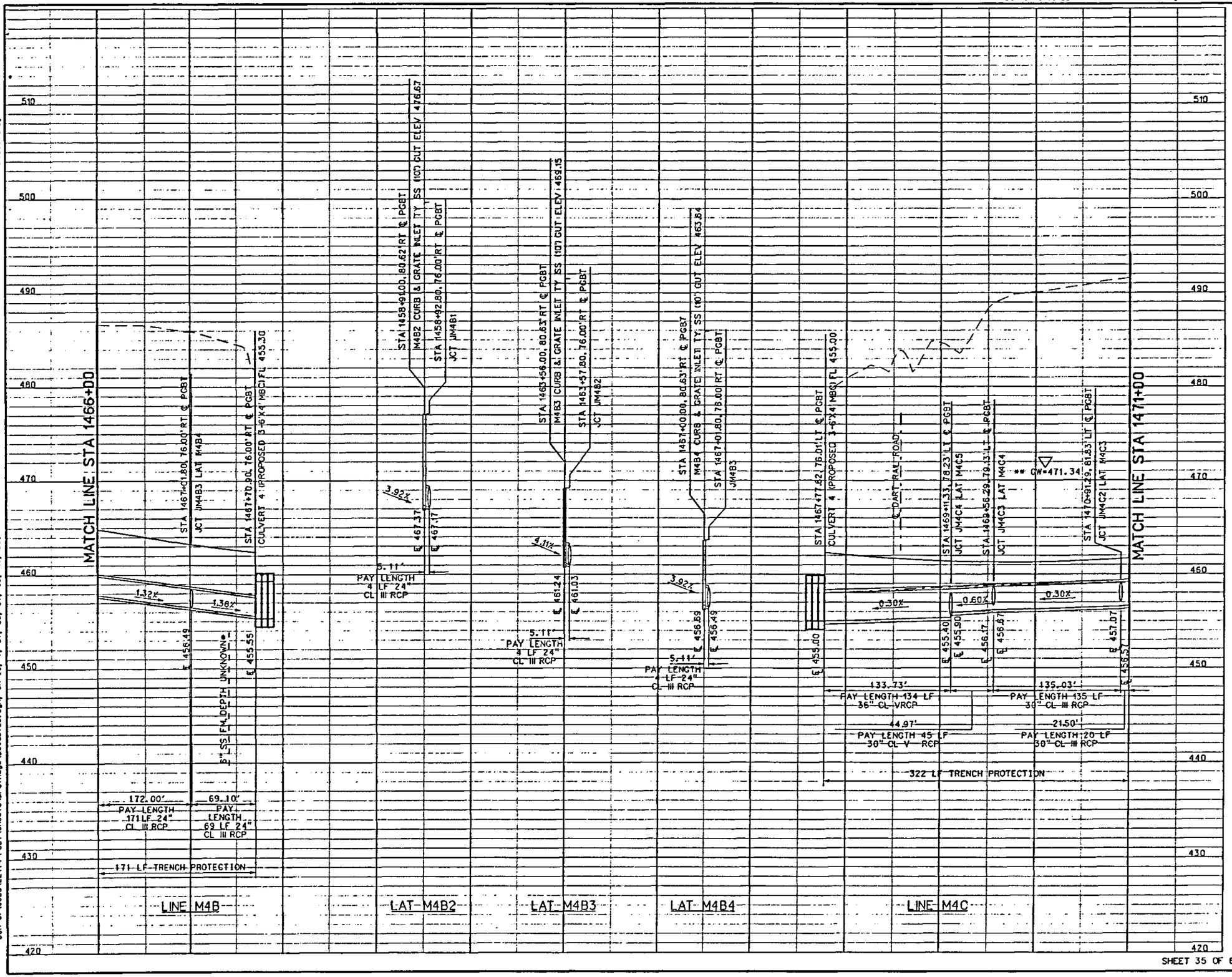

0 50 100 150 200
HORIZONTAL SCALE IN FEET

0 5 10 15 20
VERTICAL SCALE IN FEET

PROPOSED GROUND OR PAVEMENT

EXISTING GROUND

100 YR HYDRAULIC GRADE LINE

RCP FLOW DIRECTION

NOTE: HYDRAULIC GRADE LINE NOT SHOWN UNLESS PIPE UNDER PRESSURE FLOW.

* UTILITY TO BE ABANDONED & RELOCATED BY OTHERS.

** ACTUAL GROUND WATER SURFACE ELEVATION WILL VARY. VERIFY PRIOR TO CONSTRUCTION.

James M. Distin PE 1/3/08

STATE OF TEXAS JAMES M. DISTIN 85435 REGISTERED PROFESSIONAL ENGINEER

NO.	DATE	REVISION	APPROV.

PRESIDENT GEORGE BUSH TURNPIKE

NTTA
NORTH TEXAS TOLLWAY AUTHORITY

STORM SEWER PROFILES
LINES M4B, M4C &
LATERALS M4B2-M4B4

Parsons Brinckerhoff Quade & Douglas, Inc.
2777 Stemmons Freeway
Suite 833
Dallas, TX 75207

SECTION XXX

DRAWN CPS DATE 12-31-07 DESIGNED JD DATE 12-31-07
CHECKED JD DATE 12-31-07 SCALE 1"=100'

CONTRACT NO. 02011-PGB-06-CN-EN SHEET 606

SHEET 35 OF 61

Plotted 03-JAN-2008 12:33
DGN=G:\JOBS\22474-PGBT\Sheets\Drainage\B30aDV35.dgn, ON=(0, 1, 21, 23, 31, 33, 47, 50)
Plotted By mkonnen

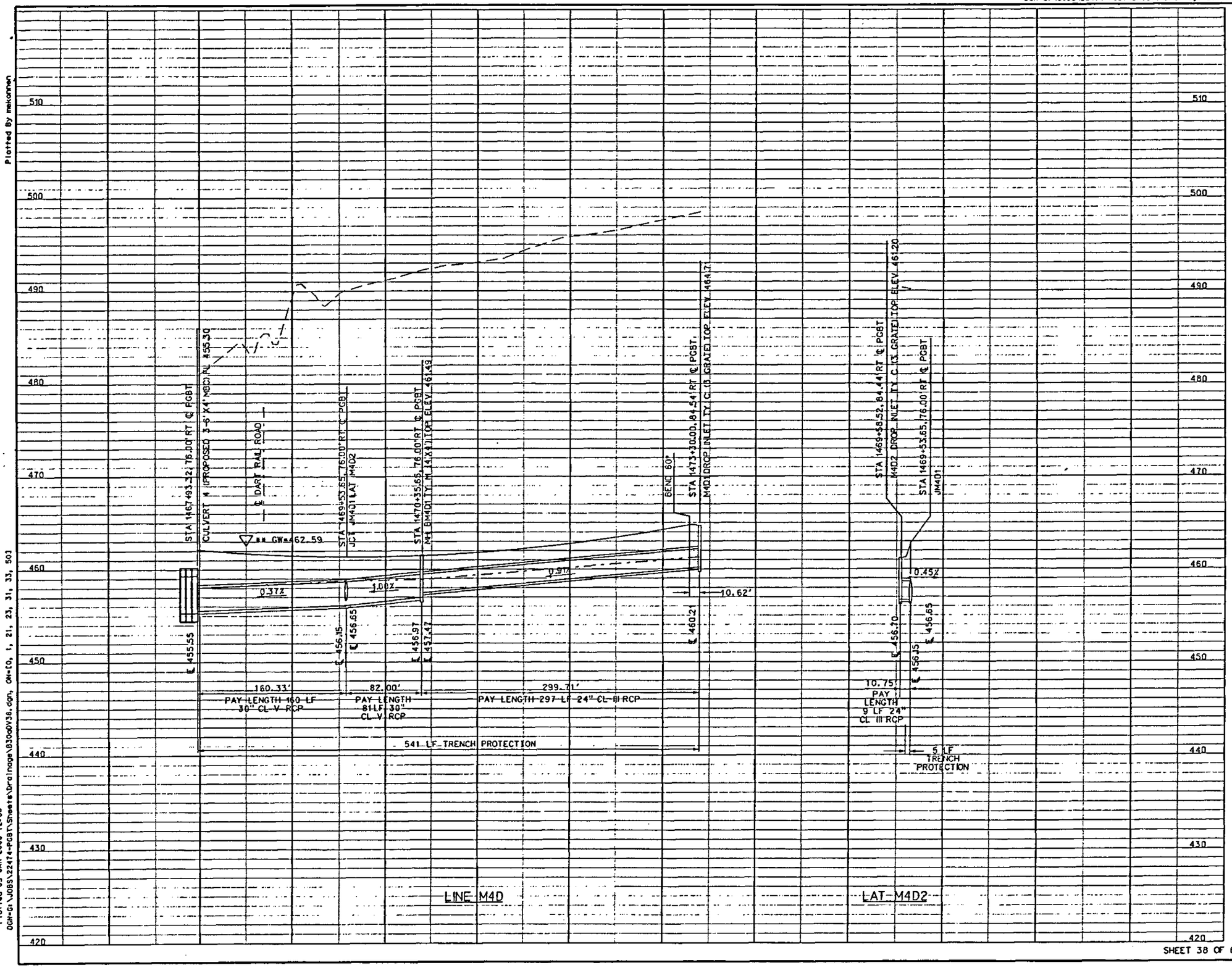

0 50 100 150 200
HORIZONTAL SCALE IN FEET

0 5 10 15 20
VERTICAL SCALE IN FEET

PROPOSED GROUND OR PAVEMENT

EXISTING GROUND

100 YR HYDRAULIC GRADE LINE

RCP FLOW DIRECTION

NOTE: HYDRAULIC GRADE LINE NOT SHOWN UNLESS PIPE UNDER PRESSURE FLOW.

* UTILITY TO BE ABANDONED & RELOCATED BY OTHERS.

** ACTUAL GROUND WATER SURFACE ELEVATION WILL VARY. VERIFY PRIOR TO CONSTRUCTION.

James M. Dustin P.E. 4/3/08

STATE OF TEXAS
JAMES M. DUSTIN
85435
REGISTERED PROFESSIONAL ENGINEER

NO.	DATE	REVISION	APPROV.

PRESIDENT GEORGE BUSH TURNPIKE

NTTA
NORTH TEXAS TOLLWAY AUTHORITY

STORM SEWER PROFILES
LINE M4D & LATERAL M4D2

Parsons Brinckerhoff Quade & Douglas, Inc.
2777 Stemmons Freeway
Suite 1313
Dallas, TX 75207

SECTION XXX

DRAWN CPS DATE 12-31-07
CHECKED JD DATE 12-31-07
DESIGNED JD DATE 12-31-07
SCALE 1"=100'

CONTRACT NO. 02011-PGB-06-CN-EN SHEET 609

Plotted By mkannan
Plotted 03-JAN-2008 12:33
DGN=G:\JOBS\22474-PGBT\Sheets\Drainage\B30aDV38.dgn, ON=[0, 1, 21, 23, 31, 33, 50]

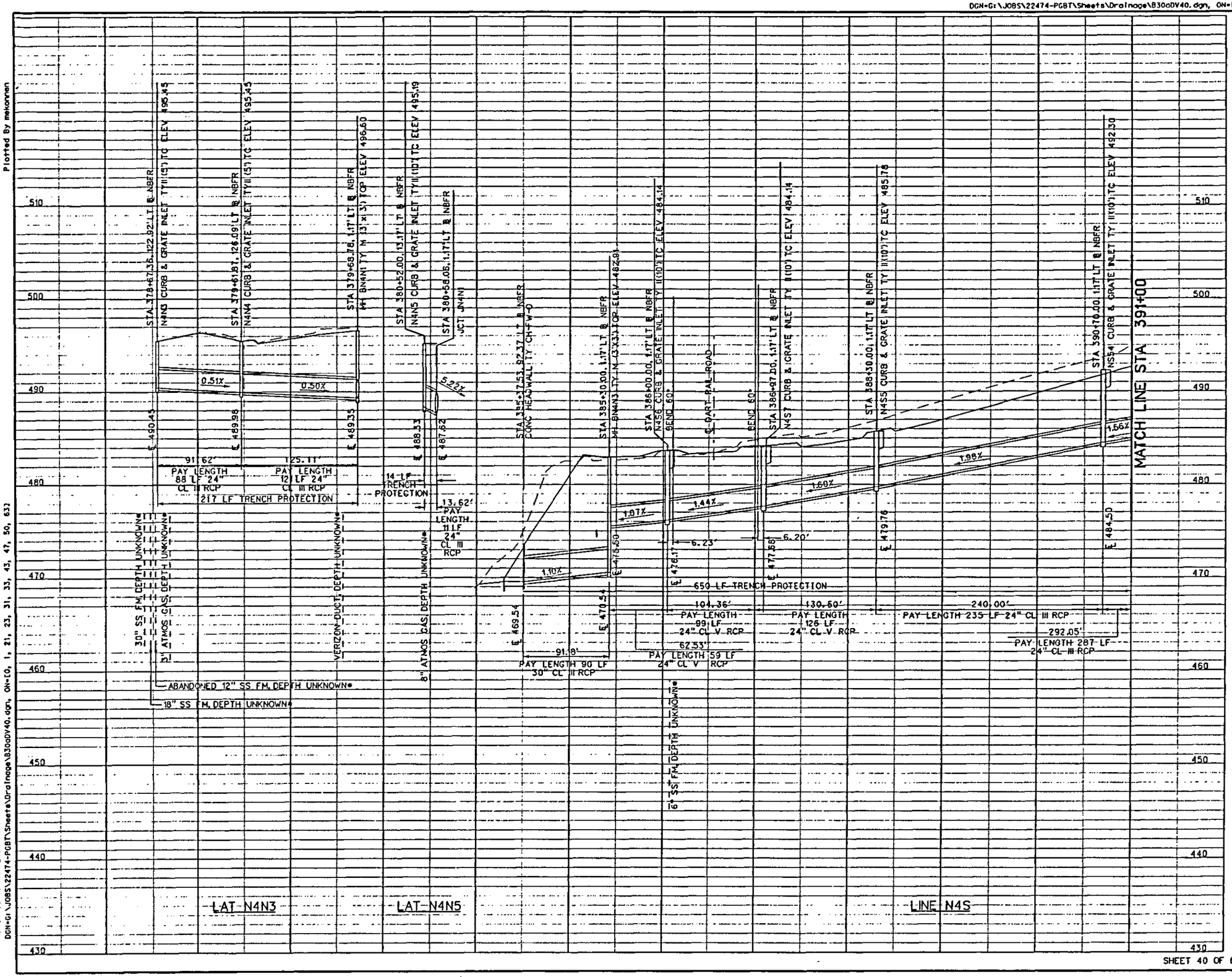

0 50 100 150 200
HORIZONTAL SCALE IN FEET

0 5 10 15 20
VERTICAL SCALE IN FEET

PROPOSED GROUND OR PAVEMENT

EXISTING GROUND

100 YR HYDRAULIC GRADE LINE

RCP FLOW DIRECTION

NOTE: HYDRAULIC GRADE LINE NOT SHOWN UNLESS PIPE UNDER PRESSURE FLOW.

* UTILITY TO BE ABANDONED & RELOCATED BY OTHERS.

** ACTUAL GROUND WATER SURFACE ELEVATION WILL VARY. VERIFY PRIOR TO CONSTRUCTION.

James M. Distin, P.E. 1/3/08

STATE OF TEXAS
JAMES M. DISTIN
85435
REGISTERED
PROFESSIONAL ENGINEER

NO.	DATE	REVISION	APPROV.

PRESIDENT GEORGE BUSH TURNPIKE

NTTA
NORTH TEXAS TOLLWAY AUTHORITY

STORM SEWER PROFILES
LINE N4S & LATERALS N4N3 & N4N5

PB Parsons Brinckerhoff Quade & Douglas, Inc.
2777 Stemmons Freeway
Suite 835
Dallas, TX 75207

SECTION XXX

DRAWN CPS DATE 12-31-07 DESIGNED JD DATE 12-31-07
CHECKED JD DATE 12-31-07 SCALE 1"=100'

CONTRACT NO. 02011-PGB-06-CN-EN SHEET 61

SHEET 40 OF 61

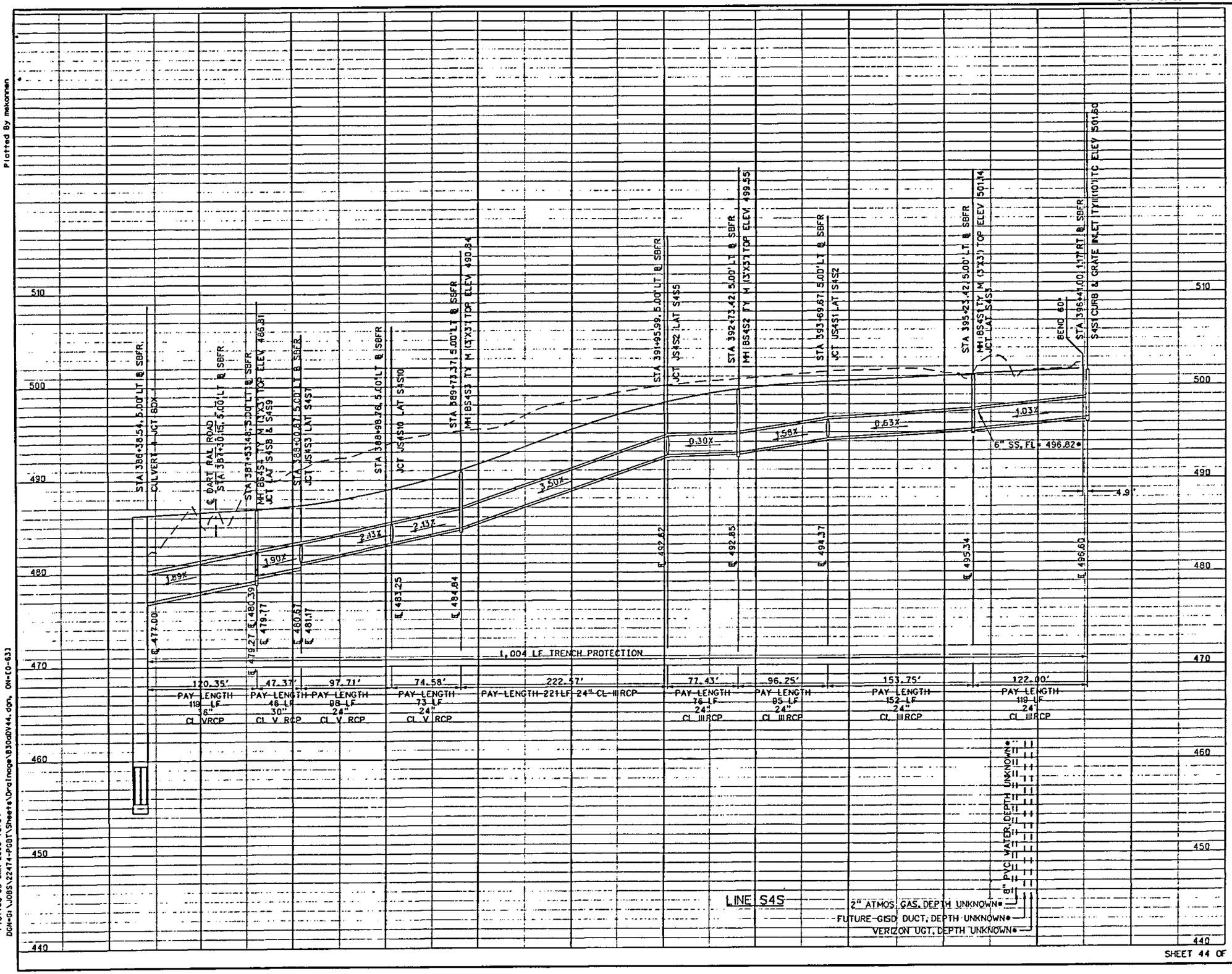

0 50 100 150 200
HORIZONTAL SCALE IN FEET

0 5 10 15 20
VERTICAL SCALE IN FEET

PROPOSED GROUND OR PAVEMENT
EXISTING GROUND
100 YR HYDRAULIC GRADE LINE
RCP FLOW DIRECTION

NOTE: HYDRAULIC GRADE LINE NOT SHOWN UNLESS PIPE UNDER PRESSURE FLOW.

* UTILITY TO BE ABANDONED & RELOCATED BY OTHERS.
** ACTUAL GROUND WATER SURFACE ELEVATION WILL VARY. VERIFY PRIOR TO CONSTRUCTION.

James M. Distin P.E. 1/3/08

STATE OF TEXAS
JAMES M. DISTIN
85435
REGISTERED
PROFESSIONAL ENGINEER

NO.	DATE	REVISION	APPROV.

PRESIDENT GEORGE BUSH TURNPIKE

NTTA
NORTH TEXAS TOLLWAY AUTHORITY

STORM SEWER PROFILES
LINE S4S

PB Parsons Brinckerhoff Quade & Douglas, Inc.
2777 Stemmons Freeway
Suite 1133
Dallas, TX 75207

SECTION XXX

DRAWN CPS DATE 12-31-07 DESIGNED JD DATE 12-31-07
CHECKED JD DATE 12-31-07 SCALE 1"=100'

CONTRACT NO. 02011-PGB-06-CN-EN SHEET 615

SHEET 44 OF 61

Plotted 03-JAN-2008 12:34

Plotted By mkorman

Plotted 03-JAN-2008 12:34
DGN=G:\JOBS\22474-PGBT\Sheets\Drainage\B30aDV44.dgn, ON=[0-63]

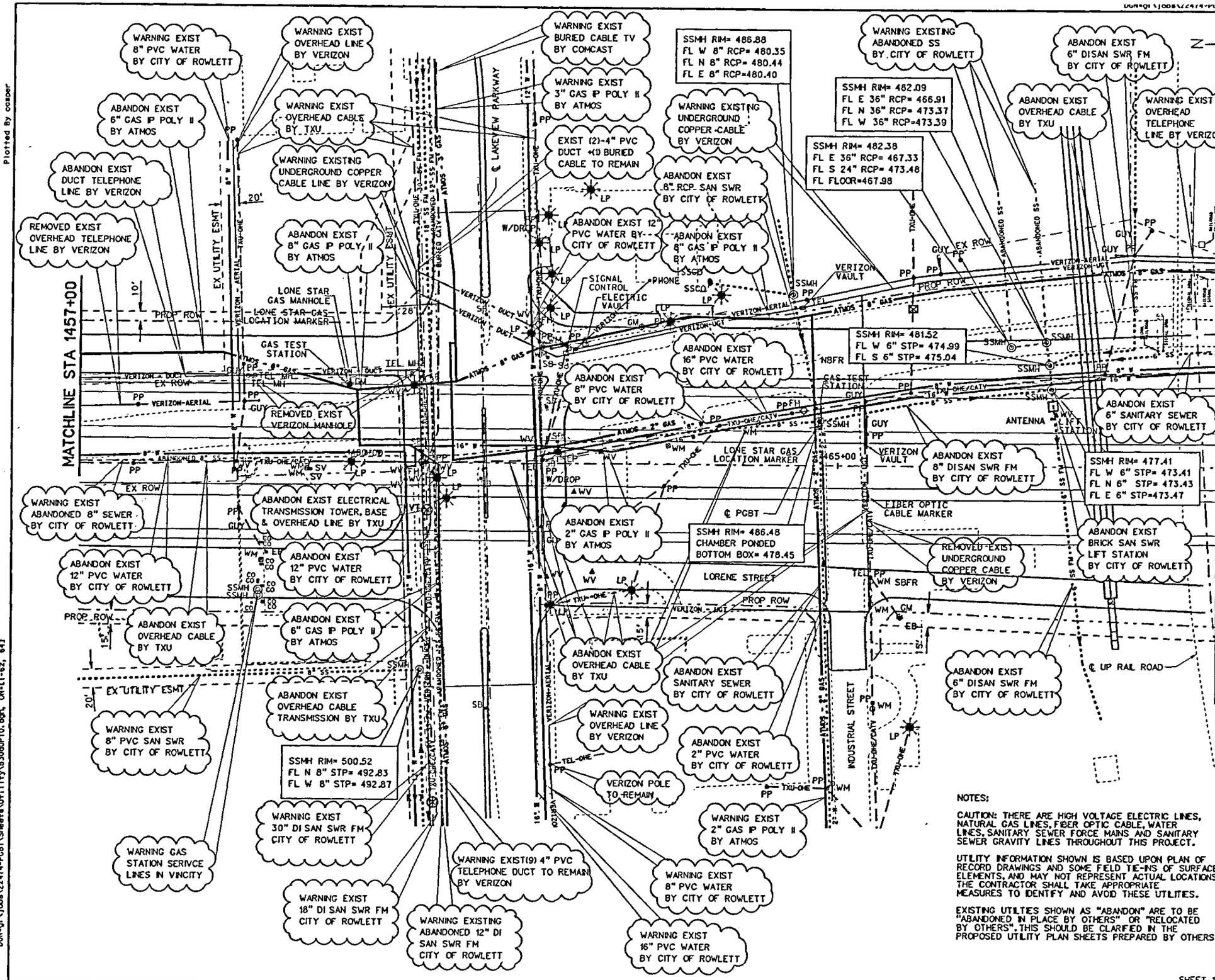

NOTES:

CAUTION: THERE ARE HIGH VOLTAGE ELECTRIC LINES, NATURAL GAS LINES, FIBER OPTIC CABLE, WATER LINES, SANITARY SEWER FORCE MAINS AND SANITARY SEWER GRAVITY LINES THROUGHOUT THIS PROJECT.

UTILITY INFORMATION SHOWN IS BASED UPON PLAN OF RECORD DRAWINGS AND SOME FELD TIE-INS OF SURFACE ELEMENTS, AND MAY NOT REPRESENT ACTUAL LOCATIONS. THE CONTRACTOR SHALL TAKE APPROPRIATE MEASURES TO IDENTIFY AND AVOID THESE UTILITIES.

EXISTING UTILTIES SHOWN AS "ABANDON" ARE TO BE "ABANDONED IN PLACE BY OTHERS" OR "RELOCATED BY OTHERS". THIS SHOULD BE CLARFIED IN THE PROPOSED UTILITY PLAN SHEETS PREPARED BY OTHERS.

STATE OF TEXAS
JAMES REISER
67287
REGISTERED PROFESSIONAL ENGINEER
1-3-'08

NO.	DATE	REVISION	APPROV.

PRESIDENT GEORGE BUSH TURNPIKE

NTTA
NORTH TEXAS TOLLWAY AUTHORITY

EXISTING UTILITY PLAN
MAIN LANES
STA 1457+00 TO 1469+00

Parsons Brinckerhoff Quade & Douglas, Inc.
2777 Stemmons Freeway
Suite 833
Dallas, TX 75207

SECTION XXX

DRAWN CPS	DATE 12-31-07	DESIGNED JR	DATE 12-31-07
CHECKED JR	DATE 12-31-07	SCALE 1"=100'	

CONTRACT NO. 02011-PGB-06-CN-EN SHEET 677

SHEET 10 OF 13

Plotted 03-JAN-2008 13:41

Plotted By casper

DGN=gr:\Jobs\22474-PGBT\Sheets\Utility\B30aUP10.dgn, ON=(1-62, 64)

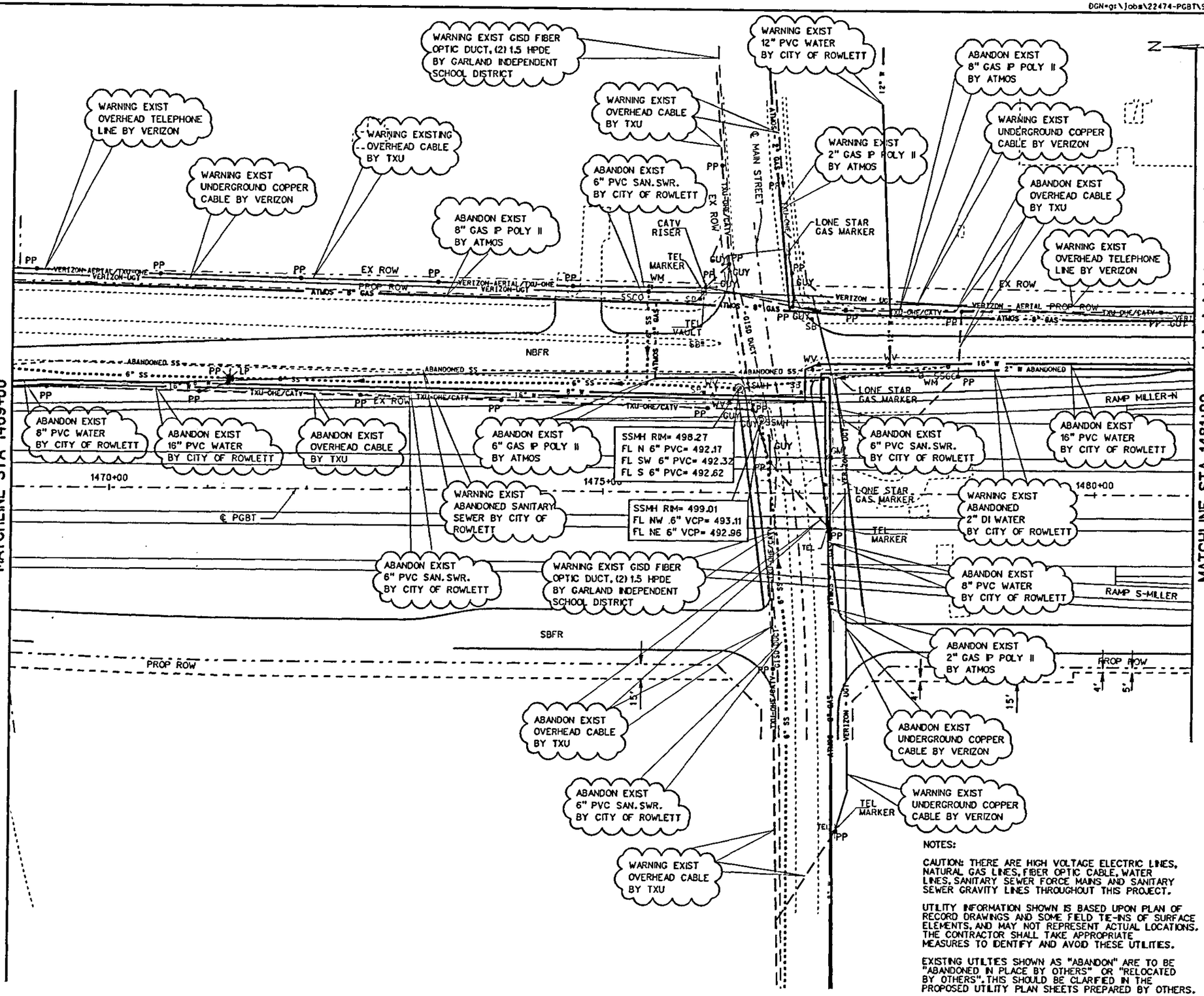

0 50 100 150 200
HORIZONTAL SCALE IN FEET

LEGEND

	PROPOSED RIGHT OF WAY
	EXISTING RIGHT OF WAY
	EXISTING UTILITY EASEMENT
TXU-UGE	TXU UNDERGROUND ELECTRIC
TXU-OHE	TXU OVERHEAD ELECTRIC
TXU-OHE/CATV	TXU OHE WITH COMCAST
TXU-OHE/CATV-TEL	TXU OHE/COMCAST WITH TELEPHONE
CATV - UGC	COMCAST UNDERGROUND CABLE
VERIZON -UGT	VERIZON UNDERGROUND COPPER CABLE
VERIZON -AERIAL	VERIZON AERIAL TELEPHONE LINE
VERIZON - DUCT	VERIZON 12 DUCT CONDUIT
VERIZON - FO	VERIZON UNDERGROUND FIBER OPTIC
XX" SS	SANITARY SEWER LINE (ROWLETT)
XX" W	WATER LINE (CITY OF ROWLETT)
ATMOS-XX"-GAS	ATMOS GAS LINE
GISD DUCT	GISD (2) 1.5 HPDE FIBER DUCT
PP	POWER POLE
GUY	GUY LINE
FH	FIRE HYDRANT
LP	LIGHT POLE
WV	WATER VALVE
WM	WATER METER
XX VAULT	VAULT
SB	SIGNAL BOX (TRAFFIC)
SIGNAL CONTROL	SIGNAL CONTROL CABINET
SSMH	SANITARY SEWER MANHOLE
SSCO	SANITARY SEWER CLEAN-OUT
	SANITARY SEWER FLOW ARROW
GM	GAS METER
XX MARKER	UTILITY SIGN MARKER
KVT	TXU TRANSMISSION TOWERS
EB	ELECTRIC BOX
XX MH	UTILITY MANHOLE
CO	CLEAN-OUT
SV	SPRINKLER VALVE

STATE OF TEXAS
JAMES REISER
67287
REGISTERED PROFESSIONAL ENGINEER
1-3-08

NOTES:

CAUTION: THERE ARE HIGH VOLTAGE ELECTRIC LINES, NATURAL GAS LINES, FIBER OPTIC CABLE, WATER LINES, SANITARY SEWER FORCE MAINS AND SANITARY SEWER GRAVITY LINES THROUGHOUT THIS PROJECT.

UTILITY INFORMATION SHOWN IS BASED UPON PLAN OF RECORD DRAWINGS AND SOME FIELD TIE-INS OF SURFACE ELEMENTS, AND MAY NOT REPRESENT ACTUAL LOCATIONS. THE CONTRACTOR SHALL TAKE APPROPRIATE MEASURES TO IDENTIFY AND AVOID THESE UTILITIES.

EXISTING UTILTES SHOWN AS "ABANDON" ARE TO BE "ABANDONED IN PLACE BY OTHERS" OR "RELOCATED BY OTHERS". THIS SHOULD BE CLARIFIED IN THE PROPOSED UTILITY PLAN SHEETS PREPARED BY OTHERS.

SHEET 11 OF 13

NO.	DATE	REVISION	APPROV.

PRESIDENT GEORGE BUSH TURNPIKE

NTTA
NORTH TEXAS TOLLWAY AUTHORITY

EXISTING UTILITY PLAN
MAIN LANES
STA 1469+00 TO 1481+00

Parsons Brinckerhoff Quade & Douglas, Inc.
2777 Stemmons Freeway
Suite 833
Dallas, TX 75207

SECTION XXX

DRAWN CPS DATE 12-31-07 DESIGNED JR DATE 12-31-07
CHECKED JR DATE 12-31-07 SCALE 1"=100'

CONTRACT NO. 02011-PGB-06-CN-EN SHEET 678

Plotted By casper
Plotted 03-JAN-2008 13:41
DGN=g:\Jobs\22474-PGBT\Sheets\Utility\B30dUP11.dgn, ON=(1-62, 64)

Plotted By kerpon

GENERAL NOTES FOR WATER AND SANITARY SEWER CONSTRUCTION

GENERAL:

1. ALL CONSTRUCTION SHALL BE IN STRICT ACCORDANCE WITH THE CONSTRUCTION STANDARDS OF THE CITY OF ROWLETT AND GOVERNED BY THE NORTH CENTRAL TEXAS COUNCIL OF GOVERNMENTS' (NCTCOG) STANDARD SPECIFICATIONS FOR PUBLIC WORKS CONSTRUCTION 3RD EDITION. SANITARY SEWER CONSTRUCTION SHALL ALSO BE IN ACCORDANCE WITH THE TEXAS COMMISSION ON ENVIRONMENTAL QUALITY (TCEQ) CHAPTER 317, DESIGN CRITERIA FOR SEWERAGE SYSTEMS.
2. IN CASE OF CONFLICT OR CONTRADICTION BETWEEN THE CONSTRUCTION STANDARDS OF THE CITY OF ROWLETT AND THE NCTCOG SPECIFICATIONS, THE FOLLOWING HIERARCHY SHALL PRESIDE: TCEQ SPECIFICATIONS, CITY OF ROWLETT CONSTRUCTION STANDARD DETAILS, CITY OF ROWLETT STANDARD GENERAL NOTES, STANDARD FORM OF AGREEMENT, NCTCOG SPECIFICATIONS.
3. A COPY OF THE STANDARD SPECIFICATIONS FOR PUBLIC WORKS CONSTRUCTION NORTH CENTRAL TEXAS, 3RD EDITION, 1998 MAY BE PURCHASED FROM THE NORTH CENTRAL TEXAS COUNCIL OF GOVERNMENTS, 616 SIX FLAGS DRIVE, ARLINGTON, TEXAS, TELEPHONE 817- 640-3300.
4. A RIGHT-OF-WAY PERMIT (ISSUED BY ROWLETT PUBLIC WORKS DEPARTMENT) IS REQUIRED PRIOR TO CONSTRUCTION IN CITY RIGHT OF WAY AND EASEMENTS.
5. THE LOCATION OF UNDERGROUND FACILITIES INDICATED ON THE PLANS IS TAKEN FROM PUBLIC RECORDS. IT IS THE CONTRACTOR'S RESPONSIBILITY TO MAKE ARRANGEMENTS WITH THE OWNERS OF SUCH UNDERGROUND FACILITES PRIOR TO WORKING IN THE AREA TO CONFIRM THER EXACT LOCATION AND TO DETERMINE WHETHER ANY ADDITIONAL FACILITES OTHER THAN THOSE SHOWN ON THE PLANS MAY BE PRESENT. THE CONTRACTOR SHALL PRESERVE AND PROTECT ALL UNDERGROUND FACILITIES.

UNDERGROUND FACILITY OWNER	TELEPHONE NO.	CONTACT
CITY OF ROWLETT WATER	972-412-6287	BOBBY JACOBS
CITY OF ROWLETT SANITARY SEWER	972-412-6287	BOBBY JACOBS
CITY OF ROWLETT STORM DRAIN	972-412-6287	RANDY DEVENNEY
CITY OF ROWLETT STREETS	972-412-6287	RANDY DEVENNEY
CITY OF ROWLETT ROW PERMIT	972-463-3928	JORGE MORALES
COMCAST CABLE	214-320-5455	MIKE RASMUSSEN
VERIZON	214-769-7005	BRUCE BEAUCHAMP
TXU ELECTRIC	972-771-1476	TERRI SHATTER
ATMOS GAS	972-485-6220	KYLE BOWMAN
TxDOT	214-320-6100	JIM BRUMMET
UTILITY LOCATES	800-DIG TESS	
DART	214-979-1111	
CITY OF DALLAS WATER UTILITES	214-670-8658	RENE CARAVEO

6. WHERE EXISTING UTILITES OR SERVICE LINES ARE CUT, BROKEN OR DAMAGED, THE CONTRACTOR SHALL REPLACE OR REPAIR THE UTILITES OR SERVICE LINES WITH THE SAME TYPE OF ORIGINAL MATERIAL AND CONSTRUCTION, OR BETTER, UNLESS OTHERWISE SHOWN OR NOTED ON THE PLANS, AT HIS OWN COST AND EXPENSE. THE CONTRACTOR SHALL IMMEDIATELY NOTIFY THE CITY OF ANY CONFLICTS IN GRADES AND ALIGNMENTS.
7. ALL EXCAVATIONS, TRENCHING AND SHORING OPERATIONS SHALL COMPLY WITH THE REQUIREMENTS OF THE U.S. DEPARTMENT OF LABOR, OSHA, "CONSTRUCTION, SAFETY AND HEALTH REGULATIONS, VOL. 29, SUBPART P. PG. 128-137 AND ANY AMENDMENTS THERETO. THE CONTRACTOR SHALL PROVIDE TRENCH SAFETY MEASURES AS REQUIRED.
8. ADEQUATE MEASURES SHALL BE TAKEN TO PREVENT EROSION. IN THE EVENT THAT SIGNIFICANT EROSION OCCURS AS A RESULT OF CONSTRUCTION, THE CONTRACTOR SHALL RESTORE THE ERODED AREA TO ORIGINAL CONDITION AS SOON AS POSSIBLE. THE CONTRACTOR SHALL HAVE ALL EROSION CONTROL MEASURES AND TREE PROTECTION INSTALLED PRIOR TO COMMENCING CONSTRUCTION.
9. THE CONTRACTOR SHALL RESTORE ALL AREAS DISTURBED BY CONSTRUCTION TO ORIGINAL CONDITION OR BETTER. RESTORED AREAS INCLUDE, BUT ARE NOT LIMITED TO, TRENCH BACKFILL, SIDE SLOPES, FENCES, CULVERT PIPES, DRAINAGE DITCHES, IRRIGATION, SODDING OR SEEDING, DRIVEWAYS, PARKING LOTS, SIDEWALKS, PRIVATE YARDS AND ROADWAYS.
10. SMOOTH STEEL CASING PIPES WITH A MINIMUM YIELD STRENGTH OF 35,000 PSI SHALL BE INSTALLED AROUND WATER AND SANITARY SEWER CARRIER PIPES AT LOCATIONS, LENGTHS AND DEPTHS AS SHOWN ON THE WATER AND SANITARY SEWER PLAN-PROFILE SHEETS. THE ENDS OF CASING PIPES SHALL BE SEALED TO PREVENT LEAKAGE OF ANY MATTER FROM THE CASING THROUGHOUT ITS LENGTH. THE MINIMUM WALL THICKNESS OF THE CASING SHALL BE AS SHOWN ON THE BELOW CHART:

MINIMUM THICKNESS	DIAMETER OF CASING PIPE
¼" (0.2500")	12" OR LESS
5/16" (0.3125")	OVER 12" - 18"
3/8" (0.3750")	OVER 18" - 22"
7/16" (0.4375")	OVER 22" - 28"
½" (0.5000")	OVER 28" - 34"
9/16" (0.5625")	OVER 34" - 42"
5/8" (0.6250")	OVER 42" - 48"

WATER:

11. 12 INCH AND SMALLER WATER LINES SHALL BE PVC PIPE AND SHALL CONFORM TO AWWA STANDARD C-900 WITH A DR OF 18, CLASS 150, BLUE IN COLOR, WITH NSF SEAL, AND SHALL BE PRESSURE TESTED AND DISINFECTED IN ACCORDANCE WITH AWWA STANDARDS.
12. 16 INCH AND LARGER WATER LINES SHALL BE PVC PIPE AND SHALL CONFORM TO AWWA STANDARD C-905 WITH A DR OF 18, CLASS 200, BLUE IN COLOR, WITH NSF SEAL, AND SHALL BE PRESSURE TESTED AND DISINFECTED IN ACCORDANCE WITH AWWA STANDARDS.
13. WATER MAINS SHALL BE CONSTRUCTED TO THE LINE AND GRADE SHOWN ON THE PLANS AND SHALL HAVE A MINIMUM OF 42 INCHES COVER TO TOP OF PIPE.
14. WATER LINE CONNECTIONS TO EXISTING MAINS SHALL BE LIMITED TO LOW FLOW PERIODS. THESE CONNECTIONS SHALL BE COORDINATED WITH THE CITY OF ROWLETT PRIOR TO BEGINNING ANY OF THE WORK.
15. ALL FITTINGS SHALL BE MADE FROM DUCTILE IRON AND FURNISHED WITH MECHANICAL JOINT ENDS AND HAVE A PRESSURE RATING OF 250 PSI. MEGA-LUG RESTRAINING GLANDS MADE IN THE USA AND CONCRETE THRUST BLOCKS SHALL BE USED ON ALL HORIZONTAL AND VERTICAL DEFLECTIONS AND INTERSECTIONS (TEES, BENDS, PLUGS AND FIRE HYDRANTS). THRUST BLOCKING SHALL BE PER THE CITY OF ROWLETT STANDARD DETAIL SHEET.
16. ALL DUCTILE IRON FITTINGS SHALL BE WRAPPED WITH AN 8-MIL MINIMUM THICHNESS POLYETHYLENE MATERIAL PER AWWA STANDARD C-150.
17. FIRE HYDRANTS SHALL BE LOCATED OUTSIDE OF EXISTING OR PROPOSED SIDEWALKS. NO OBSTRUCTIONS SHALL BE WITHIN 3 FEET IN ALL DIRECTIONS AROUND A FIRE HYDRANT.
18. ALL FIRE HYDRANT ASSEMBLIES SHALL BE EQUIPPED WITH A 6 INCH GATE VALVE AND BOX. ALL VALVES AND FIRE HYDRANTS ARE TO BE PER CITY SPECIFICATIONS. ONLY MUELLER AND AMERICAN FLOW CONTROL HYDRANTS ARE ACCEPTABLE.
19. ANY WATER VALVES LOCATED WITHIN PAVEMENT AREAS SHALL BE ADJUSTED TO FINAL GRADE BY THE PAVING CONTRACTOR.
20. ALL RISERS OVER WATER VALVES SHALL BE 6 INCH PVC WATER LINE PIPE WITH A BASS & HAYES CAST IRON ASSEMBLY ON TOP (DALLAS SHORTY STACK).
21. ALL WATER LINES SHALL BE EMBEDDED IN SAND IN ACCORDANCE WITH STANDARD CONSTRUCTION DETAILS. TRENCH BACKFILL SHALL BE NATIVE MATERIAL COMPACTED TO 95% STANDARD PROCTOR DENSITY EXCEPT FOR CROSSINGS UNDER THE ROADWAY MAIN LANE PAVING. WATER LINES CROSSING UNDER THE ROADWAY MAIN LANES SHALL BE BACKFILLED WITH FLOWABLE BACKFILL IN ACCORDANCE WITH NCTCOG SPECIFICATION SECTION 2.1.5.(e). TO THE BOTTOM OF THE PROPOSED CEMENT TREATED BASE OF THE PROPOSED PAVING STRUCTURE.
22. TRENCHES FOR WATER LINES CROSSING THE ROADWAY MAIN LANES AND PARALLEL TO AND WITHIN 20 FEET OF RETAINING WALLS SHALL HAVE VERTICAL STRAIGHT SIDES. LAYING BACK THE TRENCH ON A SLOPE AFTER 5 FEET OF DEPTH WILL NOT BE PERMITTED IN THESE SITUATIONS. TRENCH SAFETY SHEETING AND SHORING IS REQUIRED IN THIS CONDITION.
23. ALL TRENCHES FOR WATER LINES SHALL HAVE A BLUE METALLIC TAPE INSTALLED DIRECTLY OVER THE PIPE AND LOCATED 2 FEET ABOVE THE TOP OF PIPE IN THE BACKFILL MATERIAL. A CONTINUOUS 10 GAUGE COPPER WIRE SHALL BE INSTALLED ON TOP OF THE PVC WATER PIPE WITH 10' LONG COILS LEFT IN THE VALVE BOXES AT EACH END.
24. WATER LINES THAT ARE SHOWN TO BE BORED UNDER EXISTING ROADWAYS SHALL BE ENCASED IN RUST RESISTENT STEEL CASINGS USING "RAYCON " PATENTED SPACERS. WOOD SPACERS ARE NOT ACCEPTABLE.
25. ALL WATER LINE TESTING SHALL BE PERFORMED WITH A REPRESENTATIVE FROM THE CITY OF ROWLETT PRESENT.
26. ALL TRENCHES SHALL BE COMPACTION TESTED AT THE RATE OF ONE TEST PER 150 L.F. OF TRENCH PER LIFT. LIFTS SHALL BE NO GREATER THAN 12 INCHES LOOSE. TESTS SHALL BE STAGGERED SO THAT TESTS OF ADJACENT LIFTS ARE NOT DIRECTLY OVER THE PREVIOUS LIFT. THE TESTING LAB SHALL PROVIDE THE LOCATION OF ALL RESULTS ON A PLAN AND PROFILE SHEET PRIOR TO TRENCH ACCEPTANCE. THE PAVING CONTRACTOR SHALL NOT BEGIN WORK UNTIL THE CITY OF ROWLETT HAS APPROVED ALL TRENCH WORK.
27. ALL TRENCH COMPACTION DENSITY TESTING SHALL BE COORDINATED BY THE CONTRACTOR WITH THE TESTING LAB AND IN ACCORDANCE WITH THE CITY OF ROWLETT STANDARDS. THE RESULTS OF THE TRENCH COMPACTION DENSITY TESTS SHALL BE SHOWN ON THE AS-BUILT PROFILE SHEETS PREPARED BY THE CONTRACTOR AT THE LOCATION OF THE TEST. THE CITY WILL NOT ACCEPT THE INSTALLATION OF THE WATER LINE UNTIL THE AS-BUILTS WITH THE TESTING RESULTS HAVE BEEN SUBMITTED TO THE CITY ENGINEER.

SANITARY SEWER:

28. SANITARY SEWER LINES SHALL BE SDR 35 PVC PIPE, GREEN IN COLOR, UNLESS OTHER WISE NOTED ON THE CONSTRUCTION PLANS. ONE JOINT OF 150-PSI PRESSURE RATED PIPE SHALL BE INSTALLED UNDER AND CENTERED ON ALL PROPOSED WATER PIPE CROSSINGS.
29. THE CONTRACTOR SHALL ENSURE THAT TCEQ MINIMUM SEPARATION REQUIREMENTS BETWEEN WATER LINES AND SANITARY SEWER LINES ARE MET.
30. THE CONTRACTOR SHALL MAINTAIN FLOW IN THE EXISTING SANITARY SEWER MAIN LINES AND PROVIDE ALL SANITARY SEWER BY-PASSES AS NECESSARY TO PERFORM THE WORK UNTIL ALL CONNECTIONS HAVE BEEN MADE TO THE PROPOSED SYSTEM (NON-PAY ITEM).
31. SANITARY SEWER PIPES SHALL BE BEDDED PER CITY OF ROWLETT CLASS B+ EMBEDMENT AND PLACED AS DIRECTED THEREIN. TRENCH BACKFILL SHALL BE NATIVE MATERIAL COMPACTED TO 95% STANDARD PROCTOR DENSITY EXCEPT FOR CROSSINGS UNDER THE ROADWAY MAIN LANE PAVING. SANITARY SEWER LINES CROSSING UNDER THE ROADWAY MAIN LANES SHALL BE BACKFILLED WITH FLOWABLE BACKFILL IN ACCORDANCE WITH NCTCOG SPECIFICATION SECTION 2.1.5.(e). TO THE BOTTOM OF THE PROPOSED CEMENT TREATED BASE OF THE PROPOSED PAVING STRUCTURE.
32. TRENCHES FOR SANITARY SEWER LINES CROSSING THE ROADWAY MAIN LANES AND PARALLEL TO AND WITHIN 20 FEET OF RETAINING WALLS SHALL HAVE VERTICAL STRAIGHT SIDES. LAYING BACK THE TRENCH ON A SLOPE AFTER 5 FEET OF DEPTH WILL NOT BE PERMITTED IN THESE SITUATIONS. TRENCH SAFETY SHEETING AND SHORING IS REQUIRED IN THIS CONDITION.
33. ALL TRENCHES FOR SANITARY SEWER LINES SHALL HAVE A GREEN METALLIC TAPE INSTALLED DIRECTLY OVER THE PIPE AND LOCATED 2 FEET ABOVE THE TOP OF THE PIPE IN THE BACKFILL MATERIAL.
34. AFTER COMPLETION OF ALL TESTING (i.e. MANDREL AND AIR), THE CONTRACTOR SHALL PERFORM A TELEVISION CAMERA INSPECTION AND PROVIDE A VIDEO TAPE OR DVD TO THE PUBLIC WORKS DEPARTMENT. DEFLECTION AND A LOW-PRESSURE AIR TEST SHALL BE PERFORMED IN ACCORDANCE WITH THE CITY OF ROWLETT STANDARDS.
35. THE LOW-PRESSURE AIR TEST SHALL TAKE PLACE AFTER THE FRANCHISE UTILITES HAVE BEEN INSTALLED TO ENSURE NO DAMAGE WAS DONE TO THE SANITARY SEWER LINE AND SERVICES DURING THE INSTALLATION OF THE FRANCHISE UTILITES.
36. ALL SANITARY SEWER MANHOLES SHALL BE A MINIMUM 4-FT. DIAMETER IN ACCORDANCE WITH STANDARD CITY OF ROWLETT DETAILS UNLESS OTHERWISE SHOWN IN THE CONSTRUCTION PLANS. MANHOLES DEEPER THAN 12 FEET SHALL BE OF THE PRECAST TYPE.
37. THE CONTRACTOR SHALL PLACE A 3/4 INCH PLYWOOD FALSE BOTTOM IN ALL SANITARY SEWER MANHOLES BEFORE THE PAVING CONTRACTOR COMMENCES WORK. THESE FALSE BOTTOMS SHALL NOT OBSTRUCT FLOW IN THE MANHOLES AND SHALL BE REMOVED UPON COMPLETION OF THE PAVING WORK.
38. THE INTERIOR OF ALL MANHOLES SHALL BE LINED WITH AN EPOXY COATING WHICH SHALL BE RAVEN LINING 405, OR APPROVED EQUAL, AT A MINIMUM THICKNESS OF 200 MILS.
39. ALL MANHOLES SHALL BE VACUUM TESTED TO ENSURE THE MANHOLE IS WATER TIGHT.
40. ALL PRECAST MANHOLES SHALL HAVE SECTIONS WITH A SINGLE OFFSET JOINT WITH PROFILE RUBBER GASKETS AND SHALL CONFORM TO ASTM C478 AND C443.
41. ALL TRENCHES SHALL BE COMPACTION TESTED AT THE RATE OF ONE TEST PER 150 L.F. OF TRENCH PER LIFT. LIFTS SHALL BE NO GREATER THAN 12 INCHES LOOSE. TESTS SHALL BE STAGGERED SO THAT TESTS OF ADJACENT LIFTS ARE NOT DIRECTLY OVER THE PREVIOUS LIFT. IF THE DISTANCE BETWEEN MANHOLES EXCEEDS 300 FEET, A MINIMUM OF 2 TESTS PER LIFT SHALL BE TAKEN. THE TESTING LAB SHALL PROVIDE THE LOCATION OF ALL RESULTS ON A PLAN AND PROFILE SHEET PRIOR TO TRENCH ACCEPTANCE. THE PAVING CONTRACTOR SHALL NOT BEGIN WORK UNTIL THE CITY OF ROWLETT HAS APPROVED ALL TRENCH WORK.
42. ALL TRENCH COMPACTION DENSITY TESTING SHALL BE COORDINATED BY THE CONTRACTOR WITH THE TESTING LAB AND IN ACCORDANCE WITH THE CITY OF ROWLETT STANDARDS. THE RESULTS OF THE TRENCH COMPACTION DENSITY TESTS SHALL BE SHOWN ON THE AS-BUILT PROFILE SHEETS PREPARED BY THE CONTRACTOR AT THE LOCATION OF THE TEST. THE CITY WILL NOT ACCEPT THE INSTALLATION OF THE SANITARY SEWER LINE UNTIL THE AS-BUILTS WITH THE TESTING RESULTS HAVE BEEN SUBMITTED TO THE CITY ENGINEER.
43. EXISTING SANITARY SEWER MAINS TO BE ABANDONED ARE TO BE PLUGGED WITH CLASS B CONCRETE AT ALL OPEN ENDS (NON-PAY ITEM).
44. METALLIC TRACER TAPES SHALL BE 2 INCHES WIDE, CONSISTING OF A METAL STRIP COATED WITH A CORROSION RESISTANT SUBSTANCE. THE TAPE SHALL BE 2 IN WIDE "ALARMALINE" OR APPROVED EQUAL.

ROWLETT STANDARD SPECIFICATIONS:

THE CITY OF ROWLETT HAS ADOPTED THE NORTH CENTRAL TEXAS COUNCIL OF GOVERNMENTS STANDARD SPECIFICATIONS FOR PUBLIC WORKS CONSTRUCTION 3RD EDITION WITH THE FOLLOWING REVISIONS:

ITEM 2.3.2. DRAIN TILE. OMIT
ITEM 2.3.3. SEWER AND MANHOLE BRICK. OMIT
ITEM 2.3.5. CONCRETE MASONRY UNITS (PRECAST LATTICE BLOCKS). OMIT
ITEM 2.12.1. CLAY SEWER PIPE. OMIT
ITEM 2.12.16. CORRUGATED METAL PIPE OR PIPE ARCH SHAPES. OMIT
ITEM 2.17.1. GENERAL - THE CLAMP SHALL CONSIST OF A CONTOURED SADDLE FASTENED TO THE PIPE BY TWO U-BOLTS FOR DOUBLE STRAPPED CLAMPS.
ITEM 2.20. FIBERGLASS MANHOLES. OMIT
ITEM 6.7.3. (c) OMIT - AND BULLHEADS
(c) (1) OMIT - BULLHEADS SHALL BE DEFINED AS AN INDIVIDUAL SERVICE LINE WITH BRANCHES AT THE END TO SERVE TWO OR MORE OCCUPANTS.
(c) (2) OMIT - BULLHEADS OR
(d) (3) BRICK. OMIT PARAGRAPH

MAINTENANCE OF TRAFFIC FOR UTILITY WORK:

1. SAW CUTTING OF DRIVEWAYS, PARKING LOTS AND STREET PAVEMENTS SHALL BE 1-FT. WIDER THAN THE EXCAVATED TRENCH ON EACH SIDE OF THE TRENCH AND SHALL BE FULL DEPTH OF THE EXISTING PAVEMENT STRUCTURE. SAW CUTTING IS NOT A SEPARATE PAY ITEM, BUT IS SUBSIDIARY TO ITEM 0803.
2. PAVEMENTS REMOVED FOR WATER AND SANITARY SEWER WORK OUTSIDE THE NTTA ROW AND NOT SHOWN TO BE RECONSTRUCTED ON THE ROADWAY PLANS SHALL BE REPAIRED PER CITY OF ROWLETT STANDARD DETAIL SHEET "EMBEDMENT - STREET REPAIR". THIS REPAIR IS NOT A SEPARATE PAY ITEM, BUT IS SUBSIDIARY TO ITEM 0803.
3. PAVEMENTS REMOVED FOR WATER AND SANITARY SEWER WORK WITHIN THE NTTA ROW AND OUTSIDE THE NTTA ROW THAT IS SHOWN ON THE ROADWAY PLANS TO BE PERMANENTLY RECONSTRUCTED SHALL BE REPAIRED FOR TEMPORARY TRAFFIC USE BY CONSTRUCTING ASPHALT PAVEMENT 6-INCHES THICK FOR DRIVEWAYS AND 12-INCHES THICK FOR STREETS PER CITY OF ROWLETT STANDARD DETAIL SHEET "EMBEDMENT - STREET REPAIR". THIS WORK WILL BE SUBSIDIARY TO ITEM 0803.
4. ALL NON-PAVED AREAS DISTURBED BY THE WATER AND SANITARY SEWER WORK OUTSIDE THE NTTA ROW SHALL HAVE BLOCK SOD INSTALLED ON IT TO MATCH THE EXISTING GRASS OR SHALL BE BERMUDA. THIS WORK IS NOT A SEPARATE ITEM, BUT IS SUBSIDIARY TO ITEM 0803.
5. FOR CONSTRUCTION OF WATER AND SANITARY SEWER MAINS AND APPURTENANCES ALONG THE NBFR FROM STATION 375+00 TO STATION 378+00:
   A. DO NOT BEGIN CONSTRUCTION IN THIS AREA PRIOR TO SEPTEMBER 1, 2008.
   B. DO NOT OPEN MORE THAN 100 LINEAR FEET OF TRENCH AT A TIME. DO NOT PERFORM WEEKEND WORK IN THIS AREA WITHOUT PERMISSIONOF THE PROPERTY OWNER.
   C. LIMIT TIME OF CONSTRUCTION FOR WATER MAIN IN THIS AREA TO NOT MORE THAN THREE (3) DAYS INCLUDING PAVEMENT REPAIR. PERMANENT PAVEMENT REPAIR IS TO BE COMPLETED AFTER THE UTILITY WORK IS DONE AND THE AREA IS CLEANED UP.
   D. LIMIT TIME OF CONSTRUCTION FOR SANITARY SEWER MAIN AND MANHOLE TO NOT MORE THAN THREE (3) DAYS INCLUDING TEMPORARY PAVEMENT REPAIR.

1-2-08

STATE OF TEXAS
RICHARD T. GRICE
37520
LICENSED
PROFESSIONAL ENGINEER

Richard T. Grice

NO.	DATE	REVISION	APPROV.

PRESIDENT GEORGE BUSH TURNPIKE

NTTA
NORTH TEXAS TOLLWAY AUTHORITY

PROPOSED
WATER & SANITARY SEWER
GENERAL NOTES

Parsons Brinckerhoff Quade & Douglas, Inc.
2777 Stemmons Freeway
Suite 1533
Dallas, TX 75207

SECTION XXX

DRAWN DC/DWK DATE 1/2/2008 DESIGNED RTG DATE 1/2/2008
CHECKED RTG DATE 1/2/2008 SCALE 1"=50'

SHEET 1 OF 1

CONTRACT NO. 02011-PGB-06-CN-EN SHEET 681

Plotted 02-JAN-2008 10:42
DGN=g:\Jobs\22474-PGBT\Sheets\General\B30aSSGN.dgn, ON=(0, 1).

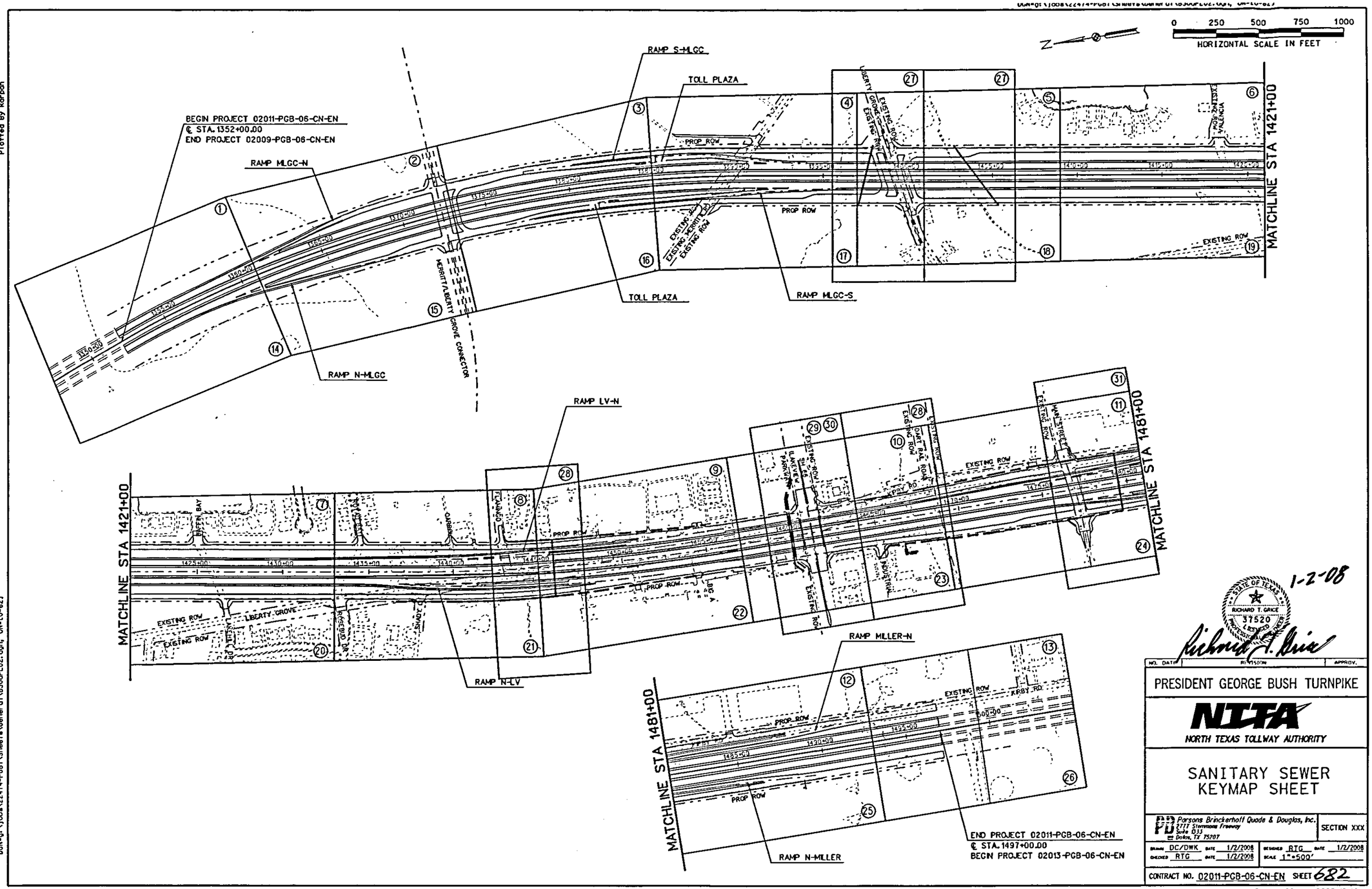

1-2-08

NO.	DATE	REVISION	APPROV.

PRESIDENT GEORGE BUSH TURNPIKE

NTTA
NORTH TEXAS TOLLWAY AUTHORITY

SANITARY SEWER
KEYMAP SHEET

PB Parsons Brinckerhoff Quade & Douglas, Inc.
2777 Stemmons Freeway
Suite 833
Dallas, TX 75207

SECTION XXX

DRAWN DC/DWK DATE 1/2/2008 DESIGNED RTG DATE 1/2/2008
CHECKED RTG DATE 1/2/2008 SCALE 1"=500'

CONTRACT NO. 02011-PGB-06-CN-EN SHEET 682

Plotted 02-JAN-2008 10:42

Plotted By karpan

Plotted 02-JAN-2008 10:42
DGN=g:\Jobs\22474-PGBT\Sheets\General\B30GPL02.dgn, ON=(0-623)

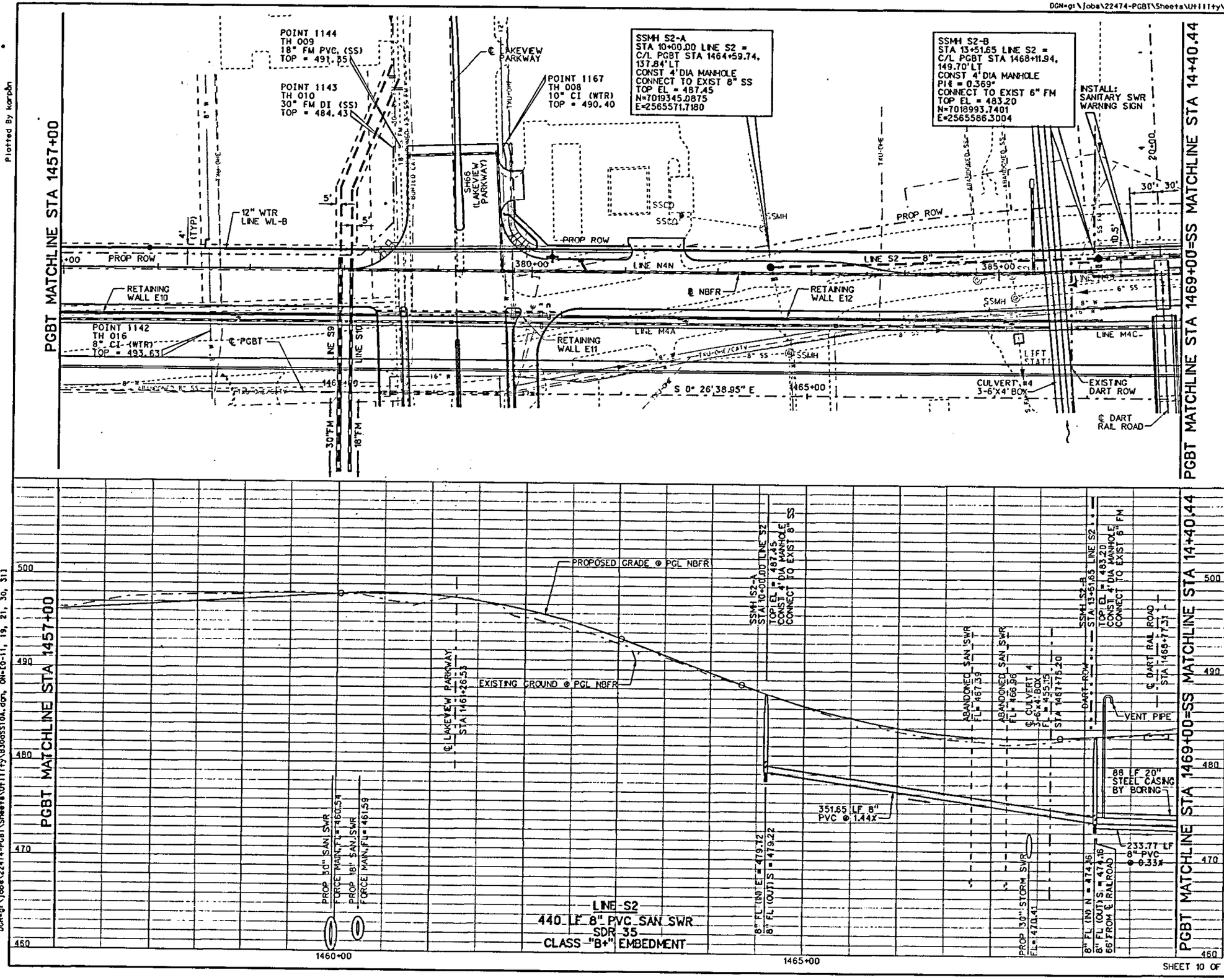

Plotted By karpon

Plotted 02-JAN-2008 10:43
DGN=g:\Jobs\22474-PGBT\Sheets\Utility\B30oSS10A.dgn, ON=(0-11, 19, 21, 30, 31)

0 50 100 150 200
HORIZONTAL SCALE IN FEET

0 5 10 15 20
VERTICAL SCALE IN FEET

LEGEND:

- PROP SAN. SEWER LINE
- PROP WATER LINE
- PROP SANITARY SEWER MH
- PROPOSED CLEAN OUT
- EXIST SANITARY SEWER
- EXIST WATER
- EXIST U/G TELE. LINE
- EXIST U/G GAS LINE
- EXIST TXU-OHE.CATV LINE

NOTES:

1. CONTRACTOR SHALL ADJUST ALL EXISTING AND PROPOSED MANHOLES, CLEANOUTS AND ANY OTHER APPURTENANCES TO FINAL GRADE, FOLLOWING ROADWAY AND EARTHWORK OPERATIONS.
2. CONTRACTOR SHALL VERIFY THE EXACT LOCATION OF EXISTING UTILITIES BEFORE BEGINNING CONSTRUCTION. REFER TO THE EXISTING UTILITY PLANS FOR INFORMATION.
3. SEE "EXISTING UTILITY PLANS" FOR UTILITY CONTACT INFORMATION.
4. INSTALL A GREEN METALLIC TRACER TAPE DIRECTLY OVER SANITARY SEWER LINES AND 2 (TWO) FEET BELOW TOP OF TRENCH.
5. SEE WATER PLAN-PROFILE SHEETS FOR WATER LINE LOCATIONS AND ELEVATIONS.

STATE OF TEXAS
RICHARD T. GRICE
37520
LICENSED
PROFESSIONAL ENGINEER

1-2-08

NO.	DATE	REVISION	APPROV.

PRESIDENT GEORGE BUSH TURNPIKE

NTTA
NORTH TEXAS TOLLWAY AUTHORITY

SANITARY SEWER
LINE S2
STA 1457+00 TO 1469+00

DRAWN DC/DWK	DATE 1/2/2008	DESIGNED RTG	DATE 1/2/2008
CHECKED RTG	DATE 1/2/2008	SCALE 1"=100'	

CONTRACT NO. 02011-PGB-06-CN-EN SHEET 692

SHEET 10 OF 31

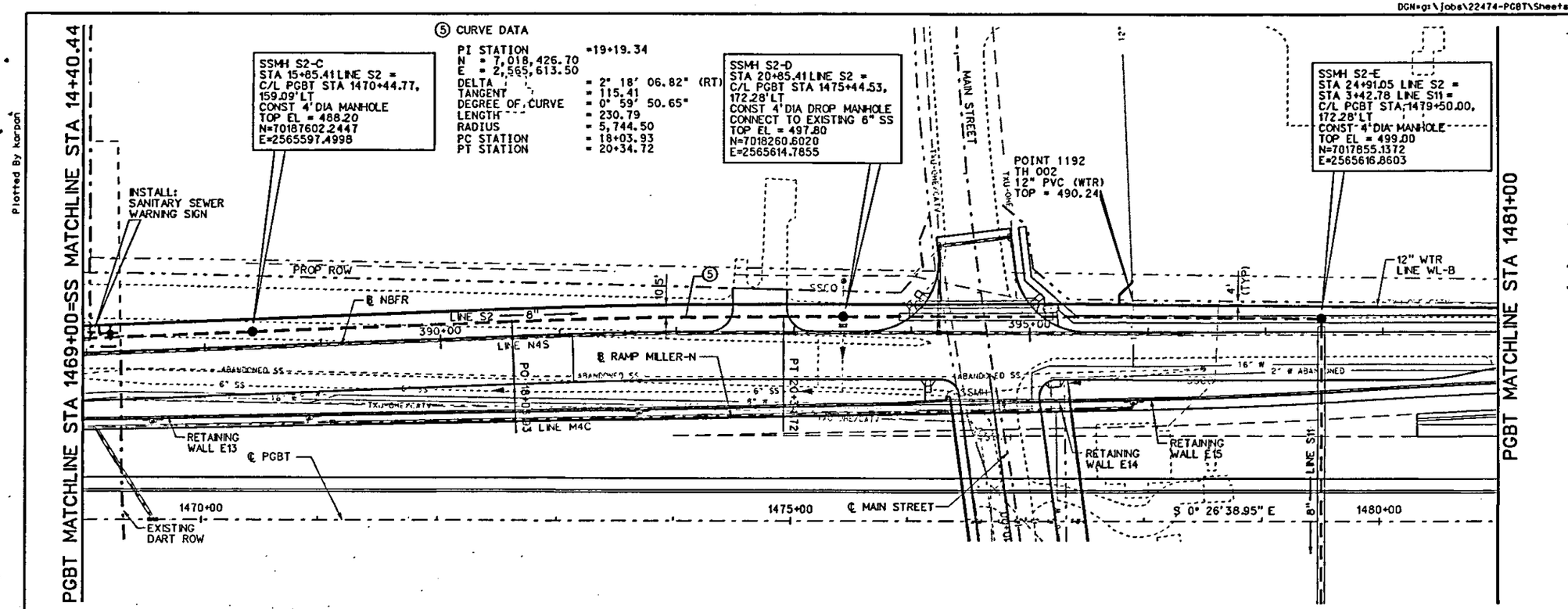

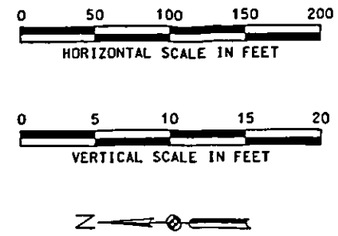

LEGEND:

- PROP SAN. SEWER LINE
- PROP WATER LINE
- PROP SANITARY SEWER MH
- PROPOSED CLEAN OUT
- EXIST SANITARY SEWER
- EXIST WATER
- EXIST U/G TELE. LINE
- EXIST U/G GAS LINE
- EXIST TXU-OHE.CATV LINE

NOTES:

1. CONTRACTOR SHALL ADJUST ALL EXISTING AND PROPOSED MANHOLES, CLEANOUTS AND ANY OTHER APPURTENANCES TO FINAL GRADE, FOLLOWING ROADWAY AND EARTHWORK OPERATIONS.
2. CONTRACTOR SHALL VERIFY THE EXACT LOCATION OF EXISTING UTILITIES BEFORE BEGINNING CONSTRUCTION. REFER TO THE EXISTING UTILITY PLANS FOR INFORMATION.
3. SEE "EXISTING UTILITY PLANS" FOR UTILITY CONTACT INFORMATION.
4. INSTALL A GREEN METALLIC TRACER TAPE DIRECTLY OVER SANITARY SEWER LINES AND 2 (TWO) FEET BELOW TOP OF TRENCH.
5. SEE WATER PLAN-PROFILE SHEETS FOR WATER LINE LOCATIONS AND ELEVATIONS.

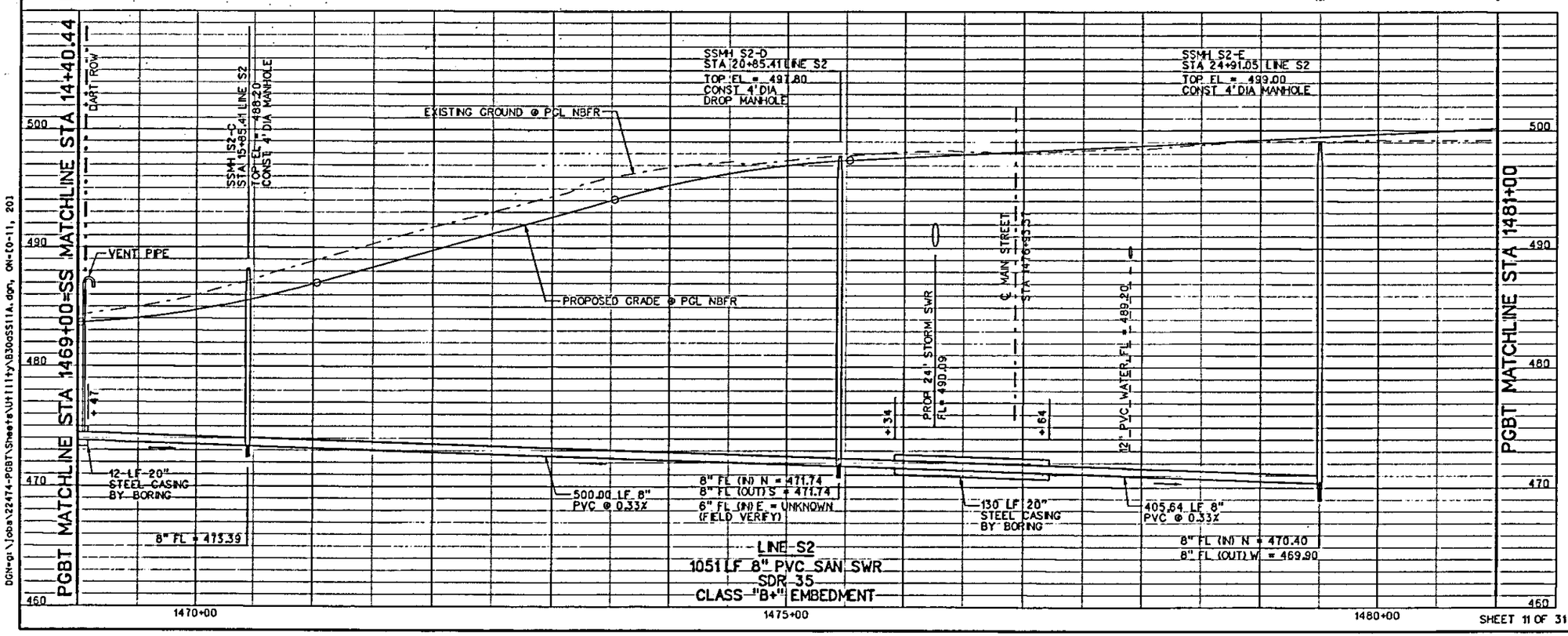

SHEET 11 OF 31

1-2-08

STATE OF TEXAS
RICHARD T. GRICE
37520
LICENSED
PROFESSIONAL ENGINEER

Richard T. Grice

NO.	DATE	REVISION	APPROV.

PRESIDENT GEORGE BUSH TURNPIKE

NTTA
NORTH TEXAS TOLLWAY AUTHORITY

SANITARY SEWER
LINE S2
STA 1469+00 TO 1481+00

Parsons Brinckerhoff Quade & Douglas, Inc.
8777 Stemmons Freeway
Suite 833
Dallas, TX 75207

SECTION XXX

DRAWN DC/DWK	DATE 1/2/2008	DESIGNED RTG	DATE 1/2/2008
CHECKED RTG	DATE 1/2/2008	SCALE 1"=100'	

CONTRACT NO. 02011-PGB-06-CN-EN SHEET 693

Plotted 02-JAN-2008 10:43
DGN=gr\jobs\22474-PGBT\Sheets\Utility\B30aSS11A.dgn, ON=(0-11, 20)

Plotted By kordon

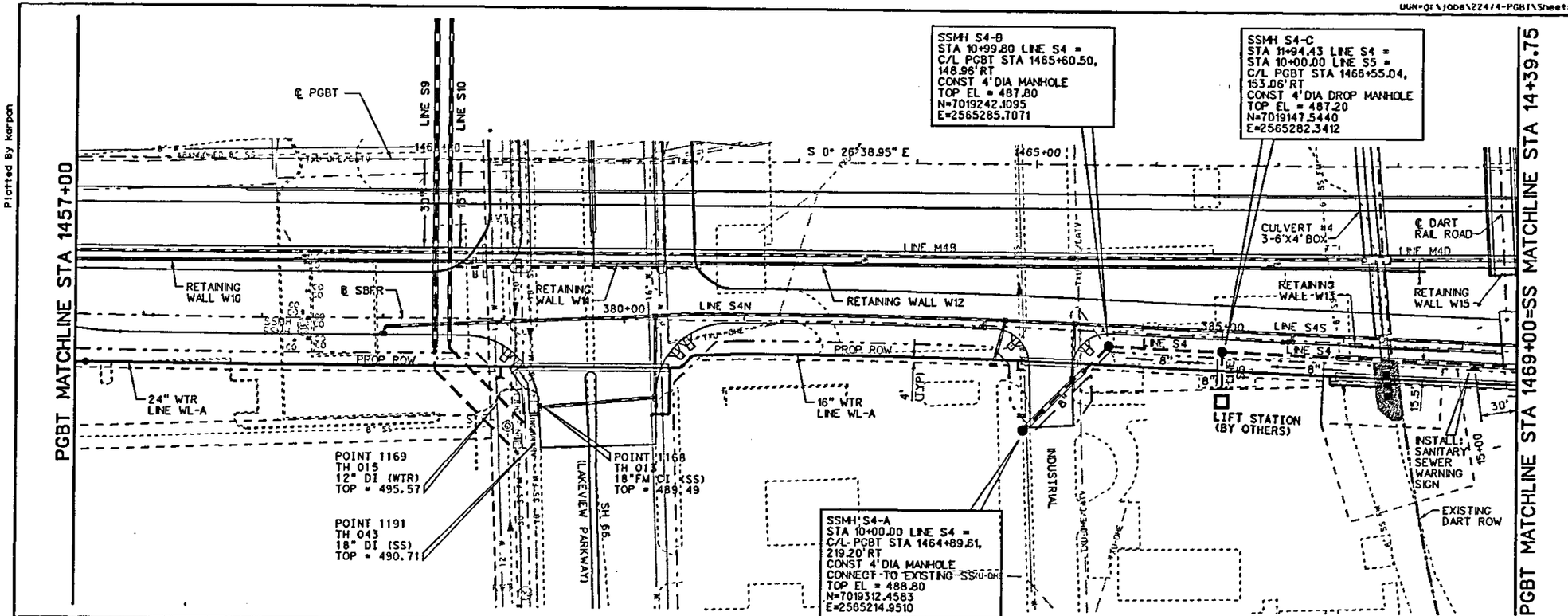

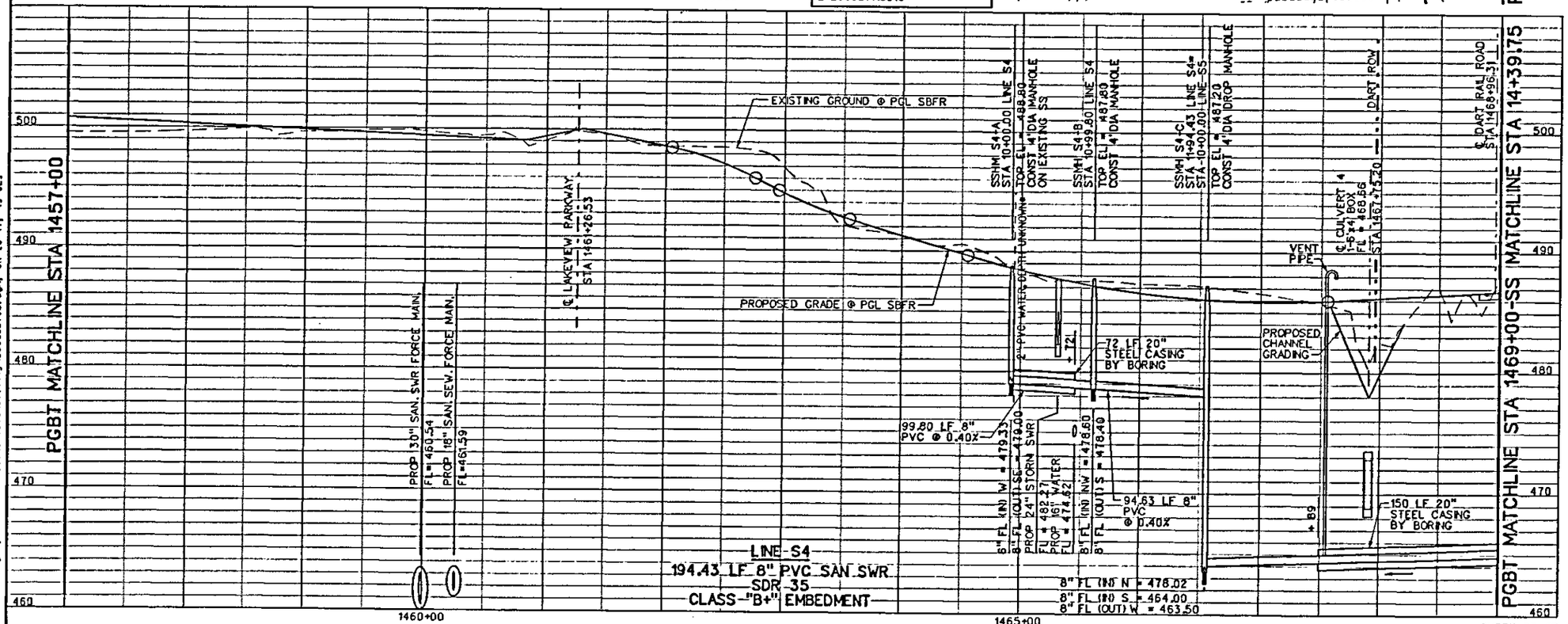

0 50 100 150 200
HORIZONTAL SCALE IN FEET

0 5 10 15 20
VERTICAL SCALE IN FEET

LEGEND:

- PROP SAN. SEWER LINE
- PROP WATER LINE
- PROP SANITARY SEWER MH
- PROPOSED CLEAN OUT
- EXIST SANITARY SEWER
- EXIST WATER
- EXIST U/G TELE. LINE
- EXIST U/G GAS LINE
- EXIST TXU-OHE. CATV LINE

NOTES:

1. CONTRACTOR SHALL ADJUST ALL EXISTING AND PROPOSED MANHOLES, CLEANOUTS AND ANY OTHER APPURTENANCES TO FINAL GRADE, FOLLOWING ROADWAY AND EARTHWORK OPERATIONS.
2. CONTRACTOR SHALL VERIFY THE EXACT LOCATION OF EXISTING UTILITES BEFORE BEGINNING CONSTRUCTION. REFER TO THE EXISTING UTILITY PLANS FOR INFORMATION.
3. SEE "EXISTING UTILITY PLANS" FOR UTILITY CONTACT INFORMATION.
4. INSTALL A GREEN METALLIC TRACER TAPE DIRECTLY OVER SANITARY SEWER LINES AND 2 (TWO) FEET BELOW TOP OF TRENCH.
5. SEE WATER PLAN-PROFILE SHEETS FOR WATER LINE LOCATIONS AND ELEVATIONS.

STATE OF TEXAS
RICHARD T. GRICE
37520
LICENSED PROFESSIONAL ENGINEER
1-2-08

NO.	DATE	REVISION	APPROV.

PRESIDENT GEORGE BUSH TURNPIKE

NTTA
NORTH TEXAS TOLLWAY AUTHORITY

SANITARY SEWER
LINE S4 AND LINE S5
STA 1457+00 TO 1469+00

Parsons Brinckerhoff Quade & Douglas, Inc.
2777 Stemmons Freeway
Suite 833
Dallas, TX 75207

SECTION XXX

DRAWN DC/DWK DATE 1/3/2008 DESIGNED RTG DATE 1/3/2008
CHECKED RTG DATE 1/3/2008 SCALE 1"=100'

CONTRACT NO. 02011-PGB-06-CN-EN SHEET 705

SHEET 23 OF 31

Plotted By karpan
Plotted 03-JAN-2008 10:42
DGN=g:\jobs\22474-PGBT\Sheets\Utility\B30aSS108.dgn, ON=[0-47, 49-62]

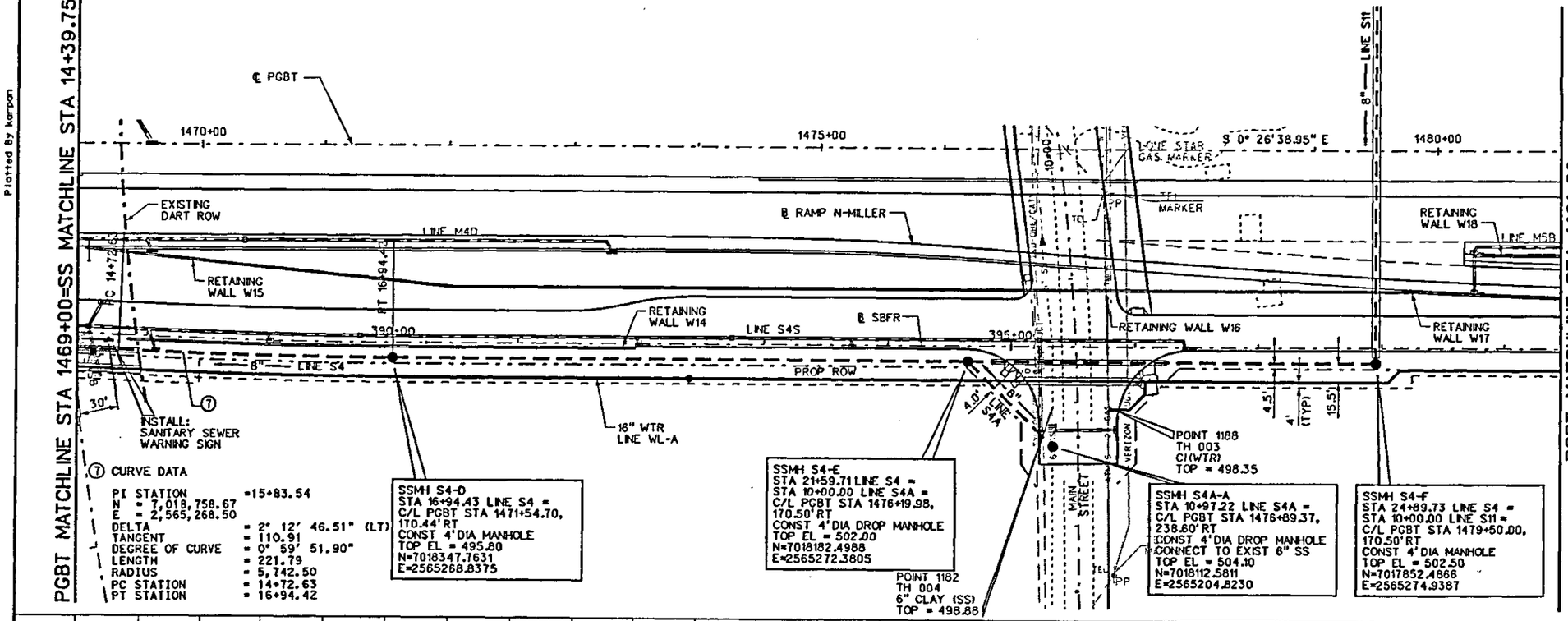

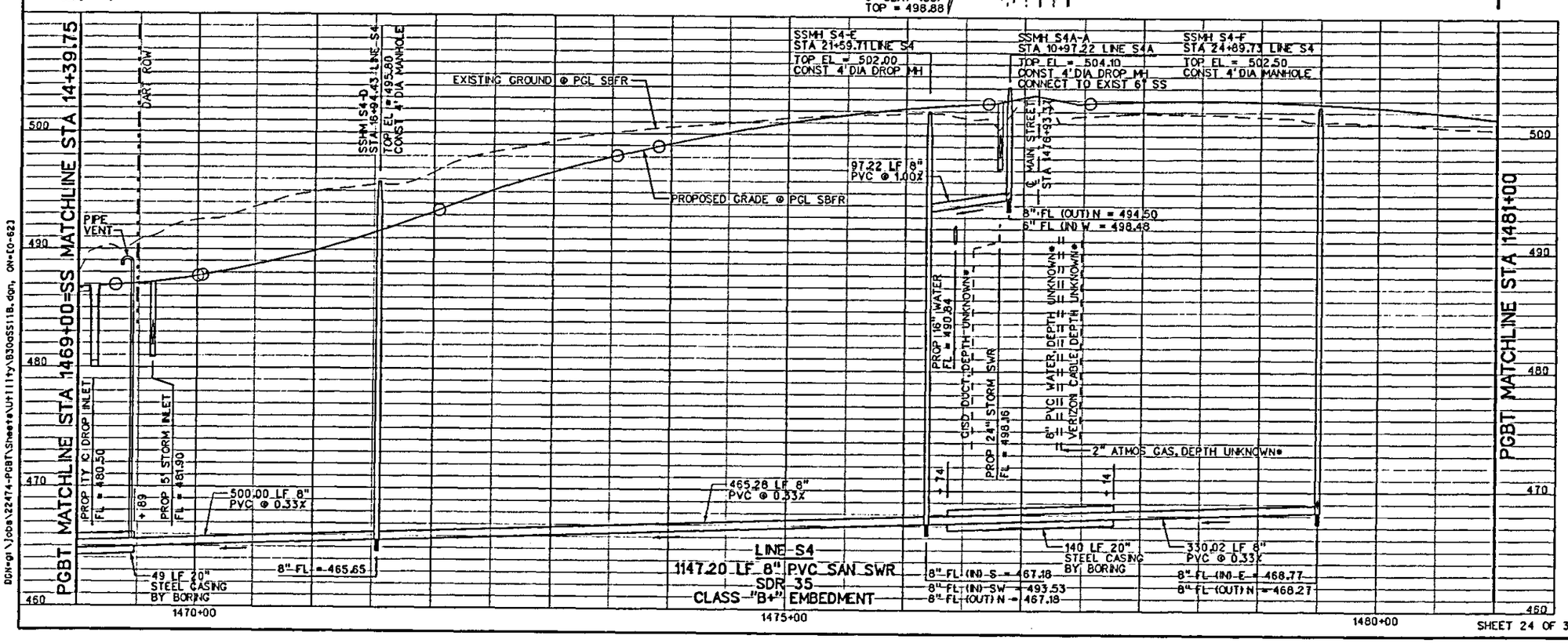

SHEET 24 OF 31

1-2-08

STATE OF TEXAS
RICHARD T. GRICE
37520
LICENSED PROFESSIONAL ENGINEER

Richard T. Grice

NO.	DATE	REVISION	APPROV.

PRESIDENT GEORGE BUSH TURNPIKE

NTTA
NORTH TEXAS TOLLWAY AUTHORITY

SANITARY SEWER
LINE S4
STA 1469+00 TO 1481+00

Parsons Brinckerhoff Quade & Douglas, Inc.
2777 Stemmons Freeway
Suite 013
Dallas, TX 75207

SECTION XXX

DRAWN DC/DWK DATE 1/3/2008 DESIGNED RTG DATE 1/3/2008
CHECKED RTG DATE 1/3/2008 SCALE 1"=100'

CONTRACT NO. 02011-PGB-06-CN-EN SHEET 706

Plotted 03-JAN-2008 11:06

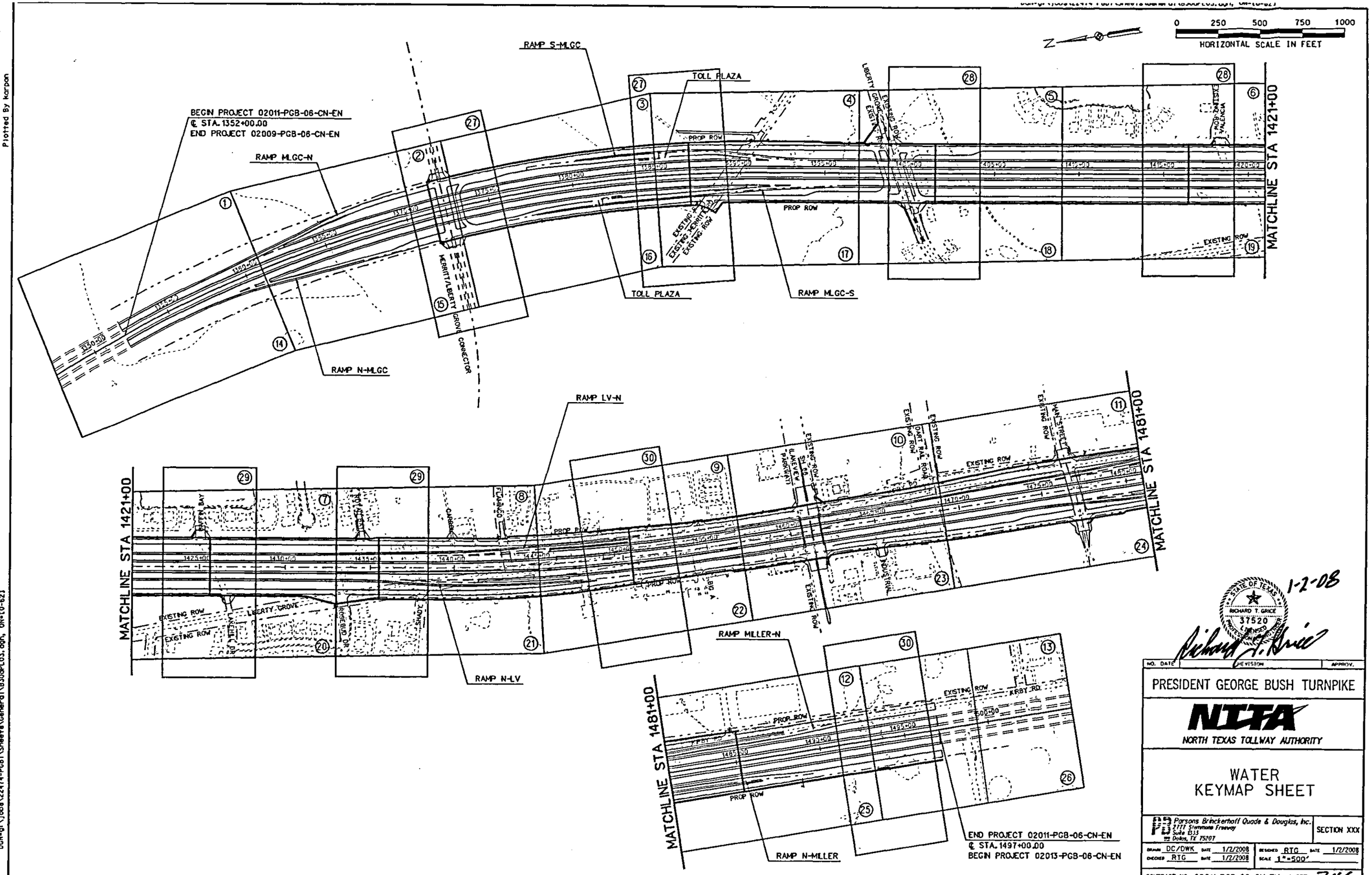

STATE OF TEXAS
RICHARD T. GRICE
37520
LICENSED
PROFESSIONAL ENGINEER

1-2-08

NO.	DATE	REVISION	APPROV.

PRESIDENT GEORGE BUSH TURNPIKE

NTTA
NORTH TEXAS TOLLWAY AUTHORITY

WATER KEYMAP SHEET

Parsons Brinckerhoff Quade & Douglas, Inc.
2777 Stemmons Freeway
Suite 1333
Dallas, TX 75207

SECTION XXX

DRAWN DC/DWK DATE 1/2/2008 DESIGNED RTG DATE 1/2/2008
CHECKED RTG DATE 1/2/2008 SCALE 1"=500'

CONTRACT NO. 02011-PGB-06-CN-EN SHEET 714

Plotted By karpon

Plotted 02-JAN-2008 11:23
DGN=gr:\Jobs\22474-PGBT\Sheets\General\830aPL03.dgn, ON=[0-62]

Plotted 02-JAN-2008 11:23

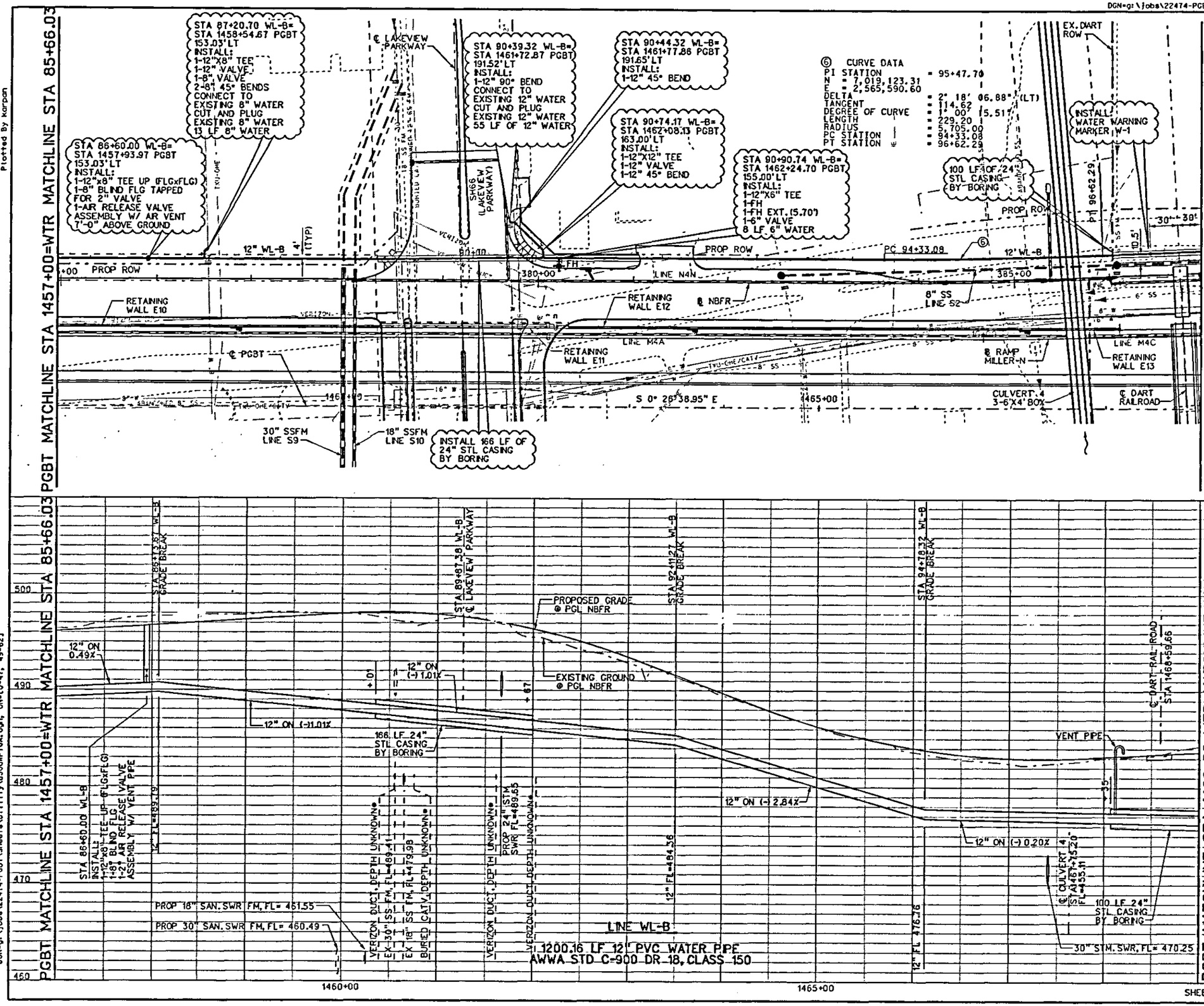

0 50 100 150 200
HORIZONTAL SCALE IN FEET

0 5 10 15 20
VERTICAL SCALE IN FEET

LEGEND:

- PROP SAN. SEWER LINE
- PROP WATER LINE
- PROP SANITARY SEWER MH
- PROPOSED CLEAN OUT
- EXIST SANITARY SEWER
- EXIST WATER
- EXIST U/G TELE. LINE
- EXIST U/G GAS LINE
- EXIST TXU-OHE.CATV LINE

NOTES:

1. CONTRACTOR SHALL ADJUST ALL EXISTING AND PROPOSED MANHOLES, VALVES, BOXES AND ANY OTHER APPURTENANCES TO FINAL GRADE, FOLLOWING ROADWAY AND EARTHWORK OPERATIONS.
2. CONTRACTOR SHALL VERIFY THE EXACT LOCATION OF EXISTING UTILITIES BEFORE BEGINNING CONSTRUCTION. REFER TO THE EXISTING UTILITY PLANS FOR INFORMATION.
3. SEE "EXISTING UTILITY PLANS" FOR UTILITY CONTACT INFORMATION.
4. INSTALL A BLUE METALLIC TRACER TAPE DIRECTLY OVER WATER PIPES AND 2 (TWO) FEET ABOVE TOP OF PIPE ALONG WITH A COPPER WIRE ON TOP OF PIPE.
5. SEE SANITARY SEWER PLAN-PROFILE SHEETS FOR SANITARY SEWER LINE LOCATIONS AND ELEVATIONS.

STATE OF TEXAS — RICHARD T. GRACE — 37520 — PROFESSIONAL ENGINEER — 1-2-08

NO.	DATE	REVISION	APPROV.

NTTA
NORTH TEXAS TOLLWAY AUTHORITY

WATER LINE
PLAN & PROFILE
STA 1457+00 TO 1469+00

DRAWN DC/DWK DATE 1/2/2008 DESIGNED RTG DATE 1/2/2008
CHECKED RTG DATE 1/2/2008 SCALE 1"=100'

CONTRACT NO. 02011-PGB-06-CN-EN SHEET 724

SHEET 10 OF 30

Plotted by karpan
Plotted 02-JAN-2008 11:24
DGN=g:\Jobs\22474-PGBT\Sheets\Utility\B30aWP10A.dgn, ON=(0-47, 49-62)

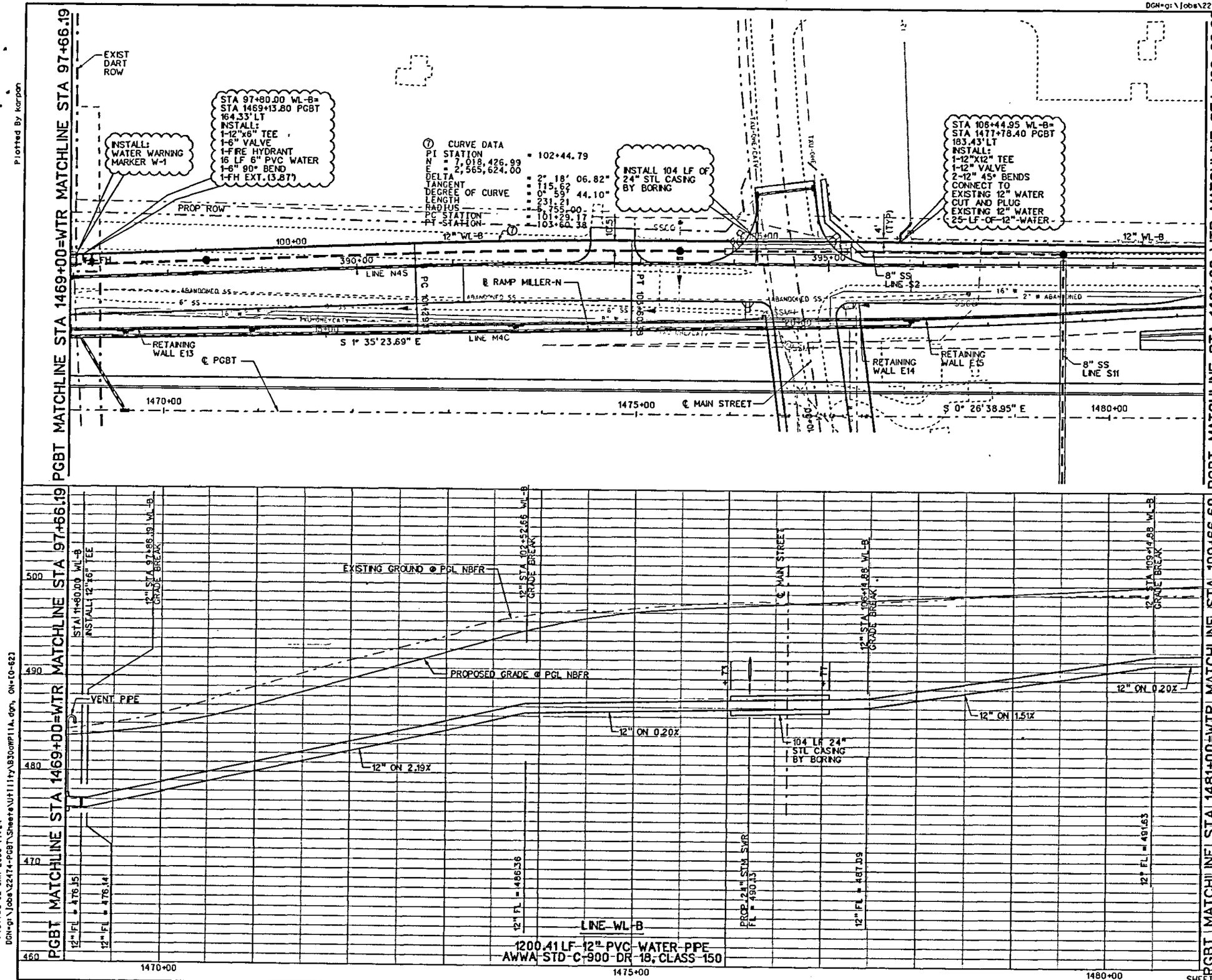

0 50 100 150 200
HORIZONTAL SCALE IN FEET

0 5 10 15 20
VERTICAL SCALE IN FEET

LEGEND:

- PROP SAN. SEWER LINE
- PROP WATER LINE
- PROP SANITARY SEWER MH
- PROPOSED CLEAN OUT
- EXIST SANITARY SEWER
- EXIST WATER
- EXIST U/G TELE. LINE
- EXIST U/G GAS LINE
- EXIST TXU-OHE.CATV LINE

NOTES:

1. CONTRACTOR SHALL ADJUST ALL EXISTING AND PROPOSED MANHOLES, VALVES, BOXES AND ANY OTHER APPURTENANCES TO FINAL GRADE, FOLLOWING ROADWAY AND EARTHWORK OPERATIONS.
2. CONTRACTOR SHALL VERIFY THE EXACT LOCATION OF EXISTING UTILITIES BEFORE BEGINNING CONSTRUCTION. REFER TO THE EXISTING UTILITY PLANS FOR INFORMATION.
3. SEE "EXISTING UTILITY PLANS" FOR UTILITY CONTACT INFORMATION.
4. INSTALL A BLUE METALLIC TRACER TAPE DIRECTLY OVER WATER PIPES AND 2 (TWO) FEET ABOVE TOP OF PIPE ALONG WITH A COPPER WIRE ON TOP OF PIPE.
5. SEE SANITARY SEWER PLAN-PROFILE SHEETS FOR SANITARY SEWER LINE LOCATIONS AND ELEVATIONS.

STATE OF TEXAS — RICHARD T. GRICE — 37520 — LICENSED PROFESSIONAL ENGINEER
1-2-08

NO.	DATE	REVISION	APPROV.

PRESIDENT GEORGE BUSH TURNPIKE

NTTA
NORTH TEXAS TOLLWAY AUTHORITY

WATER LINE
PLAN & PROFILE
STA 1469+00 TO 1481+00

Parsons Brinckerhoff Quade & Douglas, Inc.
8111 Stemmons Freeway
Suite 1033
Dallas, TX 75207

SECTION XXX

DRAWN DC/DWK DATE 1/2/2008 DESIGNED RTG DATE 1/2/2008
CHECKED RTG DATE 1/2/2008 SCALE 1"=100'

CONTRACT NO. 02011-PGB-06-CN-EN SHEET 725

Plotted 02-JAN-2008 11:24

Plotted By karpan

Plotted 02-JAN-2008 11:24
DGN=g:\Jobs\22474-PGBT\Sheets\Utility\B30aWP11A.dgn, ON=[0-62]

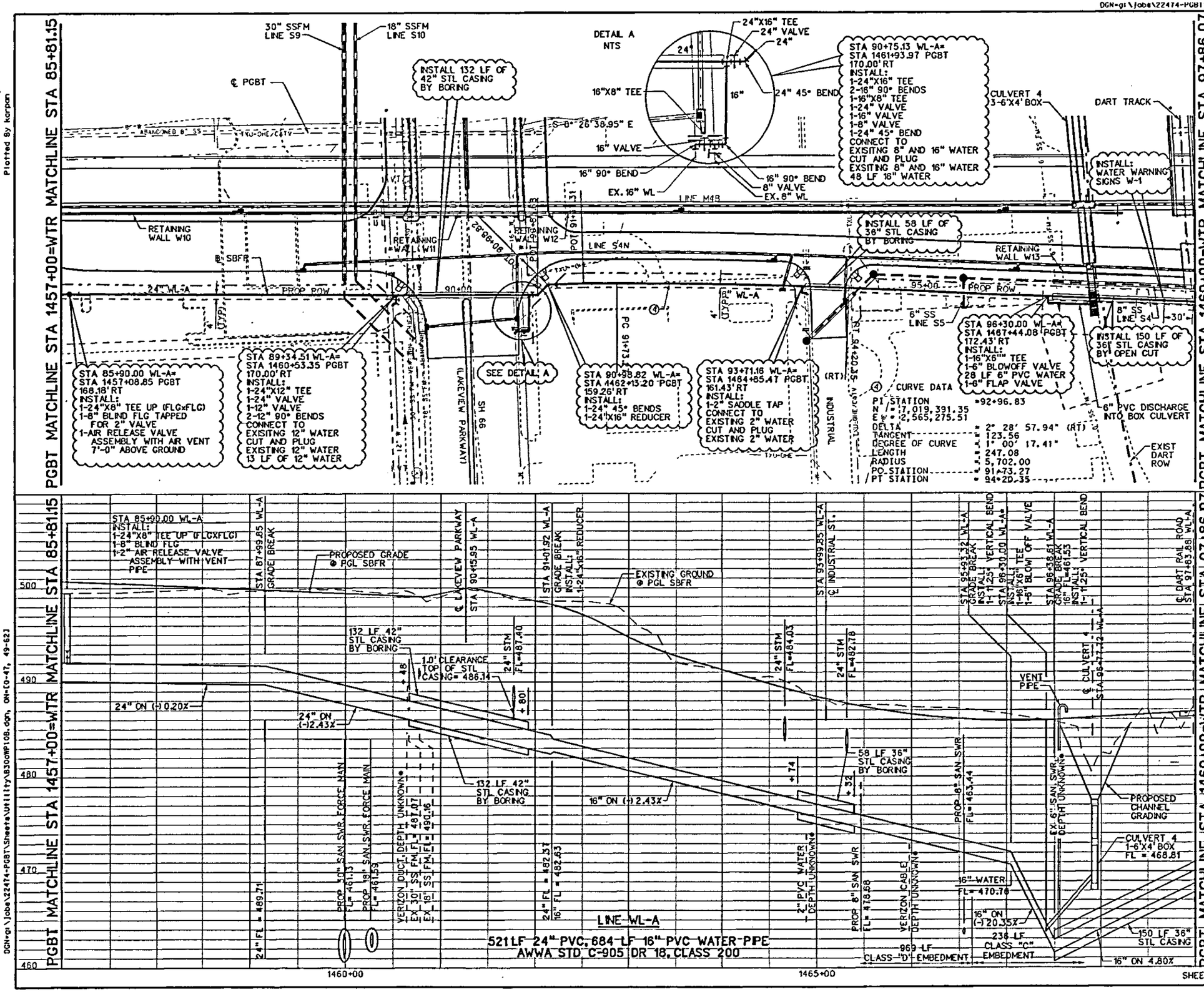

0 50 100 150 200
HORIZONTAL SCALE IN FEET

0 5 10 15 20
VERTICAL SCALE IN FEET

LEGEND:

- PROP SAN. SEWER LINE
- PROP WATER LINE
- PROP SANITARY SEWER MH
- PROPOSED CLEAN OUT
- EXIST SANITARY SEWER
- EXIST WATER
- EXIST U/G TELE. LINE
- EXIST U/G GAS LINE
- EXIST TXU-OHE.CATV LINE

NOTES:

1. CONTRACTOR SHALL ADJUST ALL EXISTING AND PROPOSED MANHOLES, VALVES, BOXES AND ANY OTHER APPURTENANCES TO FINAL GRADE, FOLLOWING ROADWAY AND EARTHWORK OPERATIONS.
2. CONTRACTOR SHALL VERIFY THE EXACT LOCATION OF EXISTING UTILITIES BEFORE BEGINNING CONSTRUCTION. REFER TO THE EXISTING UTILITY PLANS FOR INFORMATION.
3. SEE "EXISTING UTILITY PLANS" FOR UTILITY CONTACT INFORMATION.
4. INSTALL A BLUE METALLIC TRACER TAPE DIRECTLY OVER WATER PIPES AND 2 (TWO) FEET ABOVE TOP OF PIPE ALONG WITH A COPPER WIRE ON TOP OF PIPE.
5. SEE SANITARY SEWER PLAN-PROFILE SHEETS FOR SANITARY SEWER LINE LOCATIONS AND ELEVATIONS.

STATE OF TEXAS — RICHARD T. GRICE — 37520 — PROFESSIONAL ENGINEER — 1-2-08

NO.	DATE	REVISION	APPROV.

PRESIDENT GEORGE BUSH TURNPIKE

NTTA
NORTH TEXAS TOLLWAY AUTHORITY

WATER LINE
PLAN & PROFILE
STA 1457+00 TO 1469+00

Parsons Brinckerhoff Quade & Douglas, Inc.
2717 Stemmons Freeway
Suite 633
Dallas, TX 75207

SECTION XXX

DRAWN DC/DWK	DATE 1/2/2008	DESIGNED RTG	DATE 1/2/2008
CHECKED RTG	DATE 1/2/2008	SCALE 1"=100'	

CONTRACT NO. 02011-PGB-06-CN-EN SHEET 737

Plotted 02-JAN-2008 11:22

Plotted by karpan

Plotted 02-JAN-2008 11:22
DGN=gi\Jobs\22474-PGBT\Sheets\Utility\B30WP108.dgn, ON=(0-47, 49-62)

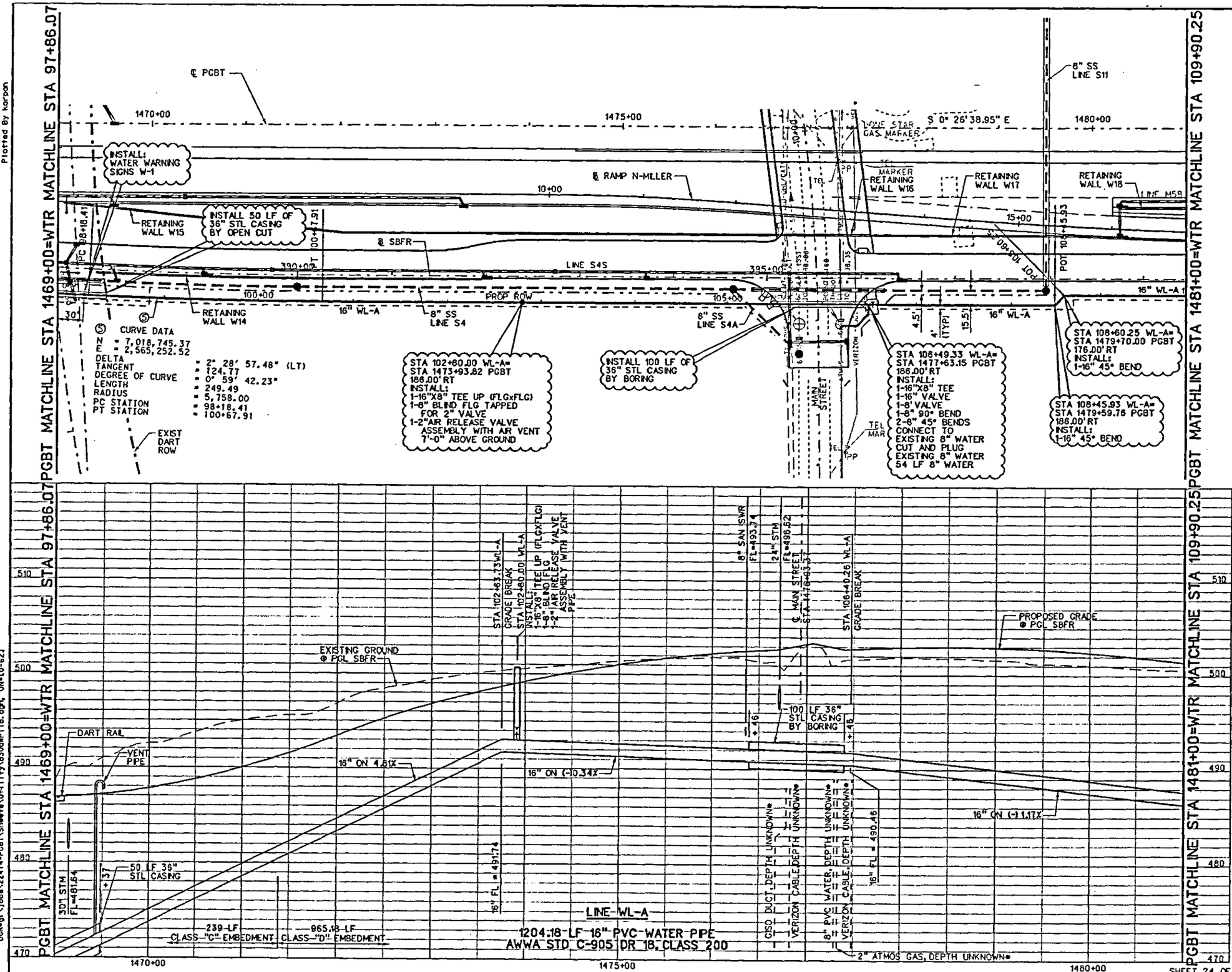

0 50 100 150 200
HORIZONTAL SCALE IN FEET

0 5 10 15 20
VERTICAL SCALE IN FEET

LEGEND:

- PROP SAN. SEWER LINE
- PROP WATER LINE
- PROP SANITARY SEWER MH
- PROPOSED CLEAN OUT
- EXIST SANITARY SEWER
- EXIST WATER
- EXIST U/G TELE. LINE
- EXIST U/G GAS LINE
- EXIST TXU-OHE.CATV LINE

NOTES:

1. CONTRACTOR SHALL ADJUST ALL EXISTING AND PROPOSED MANHOLES, VALVES, BOXES AND ANY OTHER APPURTENANCES TO FINAL GRADE, FOLLOWING ROADWAY AND EARTHWORK OPERATIONS.
2. CONTRACTOR SHALL VERIFY THE EXACT LOCATION OF EXISTING UTILITIES BEFORE BEGINNING CONSTRUCTION. REFER TO THE EXISTING UTILITY PLANS FOR INFORMATION.
3. SEE "EXISTING UTILITY PLANS" FOR UTILITY CONTACT INFORMATION.
4. INSTALL A BLUE METALLIC TRACER TAPE DIRECTLY OVER WATER PIPES AND 2 (TWO) FEET ABOVE TOP OF PIPE ALONG WITH A COPPER WIRE ON TOP OF PIPE.
5. SEE SANITARY SEWER PLAN-PROFILE SHEETS FOR SANITARY SEWER LINE LOCATIONS AND ELEVATIONS.

1-2-08

STATE OF TEXAS
RICHARD T. GRICE
37520
LICENSED PROFESSIONAL ENGINEER

NO.	DATE	REVISION	APPROV.

PRESIDENT GEORGE BUSH TURNPIKE

NTTA
NORTH TEXAS TOLLWAY AUTHORITY

WATER LINE
PLAN & PROFILE
STA 1469+00 TO 1481+00

PB Parsons Brinckerhoff Quade & Douglas, Inc.
2777 Stemmons Freeway
Suite 1313
Dallas, TX 75207

SECTION XXX

DRAWN DC/DWK DATE 1/3/2008 DESIGNED RTG DATE 1/3/2008
CHECKED RTG DATE 1/3/2008 SCALE 1"=100'

CONTRACT NO. 02011-PGB-06-CN-EN SHEET 738

Plotted 03-JAN-2008 10:44

Plotted By karpon

Plotted 03-JAN-2008 10:44
DGN=gt:\Jobs\22474-PGBT\Sheets\UH-11ry\B30GMP11B.dgn, ON=EO-623

SPIRAL RR21A CURVE DATA

ANGLE	= 0°37'30"
LS	= 50.00'
R	= 2191.83'
YS	= 0.18'
XS	= 50.00'
P	= 0.05'
K	= 25.00'
LT	= 33.33'
ST	= 16.67'
LC	= 50.00'
DEF1	= 0°12'30"
DEG	= 2°30'00"

RR21 CURVE DATA

Δ = 14°11'33"
R = 2291.83
T = 285.31
L = 567.70

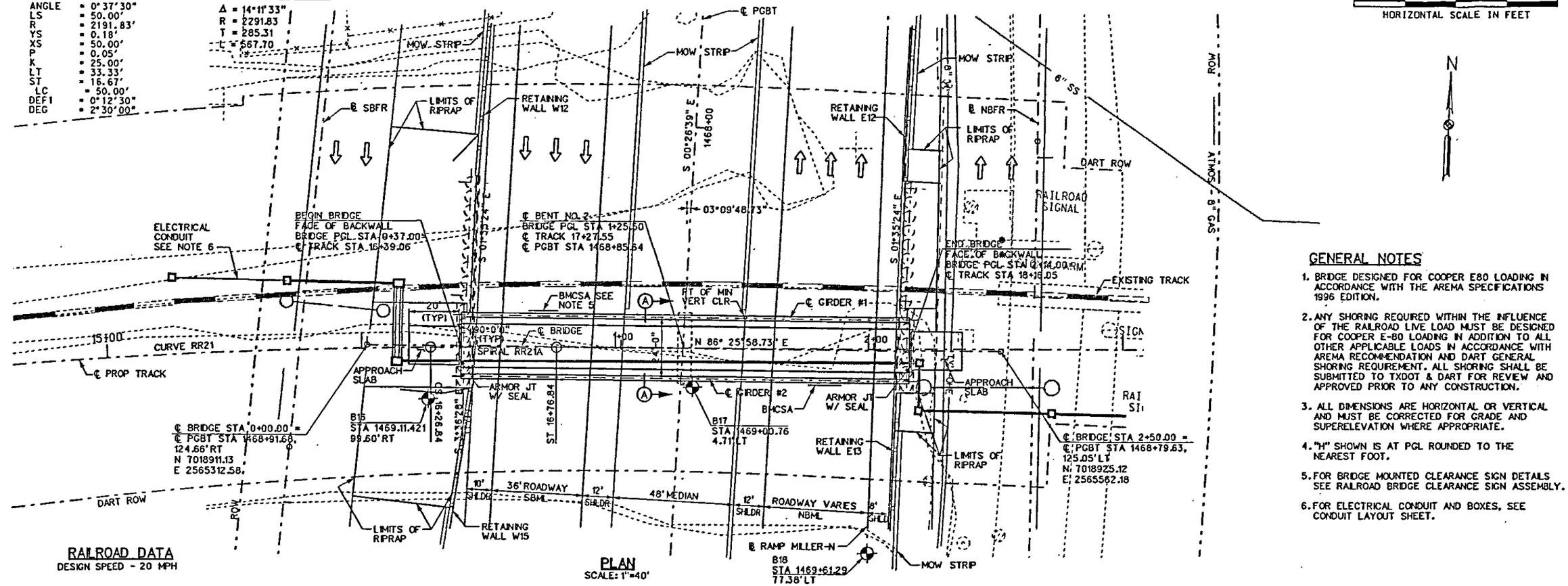

RAILROAD DATA

DESIGN SPEED - 20 MPH

PLAN
SCALE: 1"=40'

GENERAL NOTES

1. BRIDGE DESIGNED FOR COOPER E80 LOADING IN ACCORDANCE WITH THE AREMA SPECIFICATIONS 1996 EDITION.
2. ANY SHORING REQUIRED WITHIN THE INFLUENCE OF THE RAILROAD LIVE LOAD MUST BE DESIGNED FOR COOPER E-80 LOADING IN ADDITION TO ALL OTHER APPLICABLE LOADS IN ACCORDANCE WITH AREMA RECOMMENDATION AND DART GENERAL SHORING REQUIREMENT. ALL SHORING SHALL BE SUBMITTED TO TXDOT & DART FOR REVIEW AND APPROVED PRIOR TO ANY CONSTRUCTION.
3. ALL DIMENSIONS ARE HORIZONTAL OR VERTICAL AND MUST BE CORRECTED FOR GRADE AND SUPERELEVATION WHERE APPROPRIATE.
4. "H" SHOWN IS AT PGL ROUNDED TO THE NEAREST FOOT.
5. FOR BRIDGE MOUNTED CLEARANCE SIGN DETAILS SEE RAILROAD BRIDGE CLEARANCE SIGN ASSEMBLY.
6. FOR ELECTRICAL CONDUIT AND BOXES, SEE CONDUIT LAYOUT SHEET.

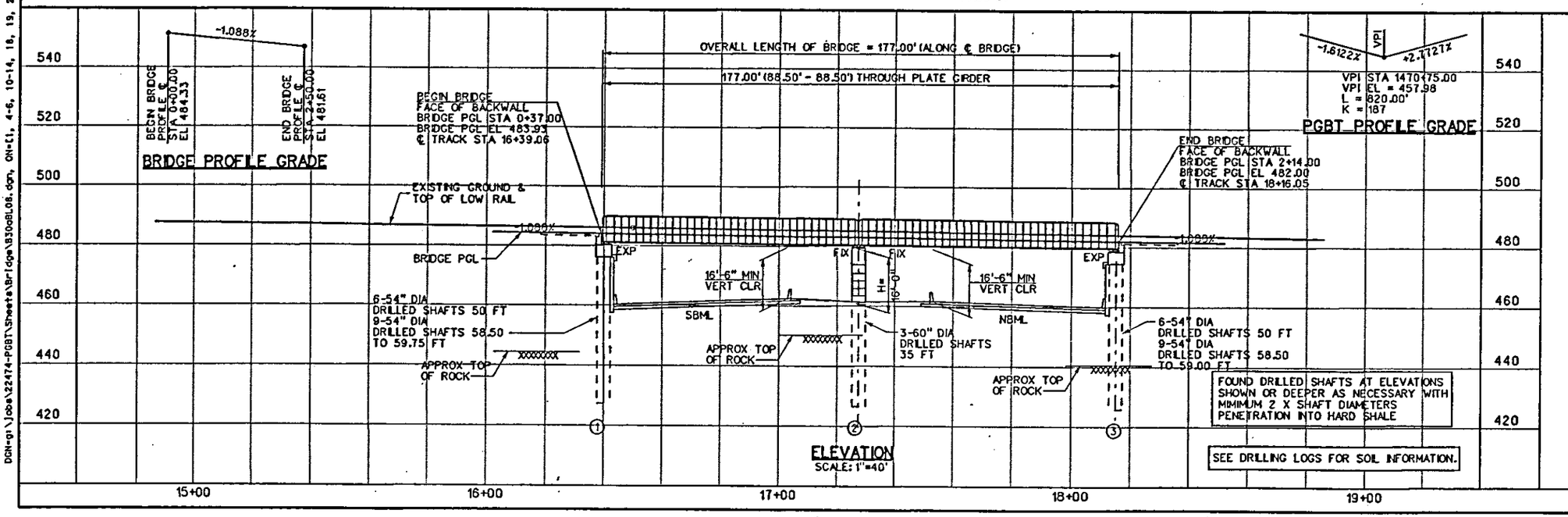

ELEVATION
SCALE: 1"=40'

NBI 18-057-0-2964-06-477

STATE OF TEXAS
ARGUANG CAO
88343
LICENSED
PROFESSIONAL ENGINEER
1-3-08

NO.	DATE	REVISION	APPROV.

PRESIDENT GEORGE BUSH TURNPIKE

NTTA
NORTH TEXAS TOLLWAY AUTHORITY

DART RAILROAD UNDERPASS
MP 745.9

BRIDGE LAYOUT

Parsons Brinckerhoff Quade & Douglas, Inc.
2777 Stemmons Freeway
Suite 1313
Dallas, TX 75207

SECTION XXX

DRAWN CPS	DATE 12-31-07	DESIGNED JGC	DATE 12-31-07
CHECKED OAS	DATE 12-31-07	SCALE 1"=40'	

CONTRACT NO. 02011-PGB-06-CN-EN SHEET 865

Plotted 03-JAN-2008 19:52

Plotted 03-JAN-2008 19:52
DGN=g:\Jobs\2474-PGBT\Sheets\Bridge\B30dBL06.dgn, ON=(1, 4-6, 10-14, 18, 19, 21, 23, 24, 37, 38, 56, 61, 64)
Plotted By quintanad

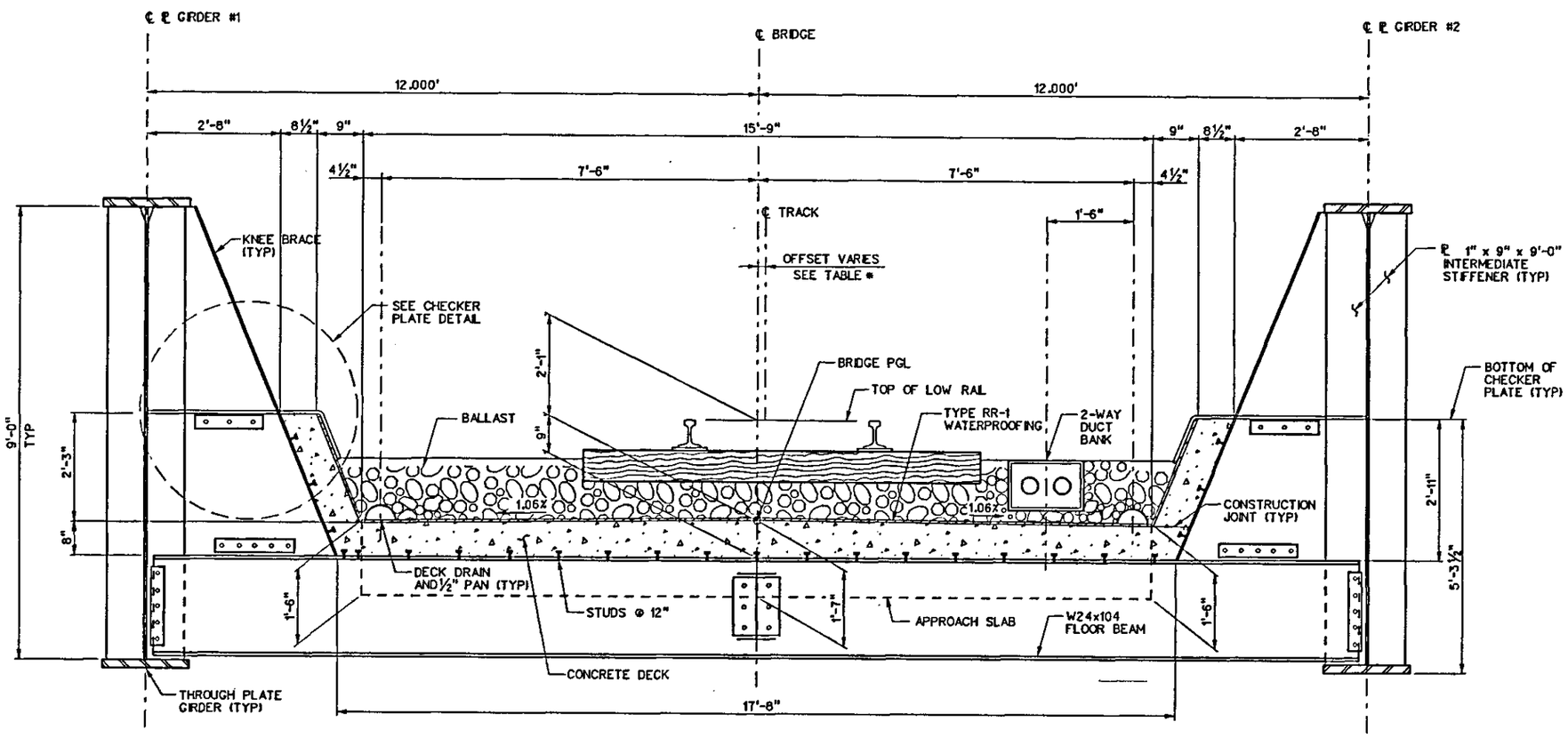

TYPICAL SECTION A-A

SCALE: ⅜"=1'-0"

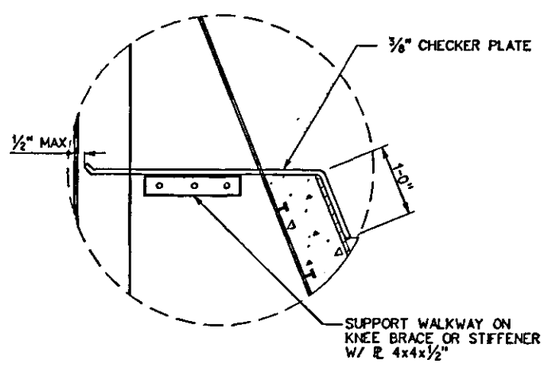

CHECKER PLATE DETAIL

NTS

GENERAL NOTES

1. SECTION SHOWN NORMAL TO ℄ BRIDGE LOOKING UPSTATION.
2. 8" SEMI-CIRCULAR DECK DRAIN WITH PAN (PREFORMED, CORRUGATED AND GALVANIZED, OF 12 GAUGE METAL) PLACE AT TOP OF BALLAST CURB
3. FABRICATE RAILROAD STEEL THROUHG GIRDER OF WEATHERING STEEL, INCLUDING ALL SUDSIDIARY COMPONENTS.
4. ALL THE WEATHERING STEEL SHALL BE PAINTED. CONTRACTOR SHALL REFER TO THE GENERAL NOTES FOR PAINTING REQUIREMENTS.

LOCATION	OFFSET SCHEDULE	
	STATION	OFFSET*
ABUT 1	0+37.00	0.58' RT
BENT 2	1+25.50	0.85' LT
ABUT 3	2+14.00	0.61' LT

* OFFSET IS MEASURED PERPENDICULAR FROM ℄ BRIDGE TO ℄ TRACK

STATE OF TEXAS
JINGGANG CAO
88343
LICENSED
PROFESSIONAL ENGINEER
1-3-08

NO.	DATE	REVISION	APPROV.

PRESIDENT GEORGE BUSH TURNPIKE

NTTA
NORTH TEXAS TOLLWAY AUTHORITY

DART RAILROAD UNDERPASS
TYPICAL SECTION

Parsons Brinckerhoff Quade & Douglas, Inc.
8111 Stemmons Freeway
Suite 833
Dallas, TX 75207

SECTION XXX

DRAWN CPS DATE 12-31-07 DESIGNED JGC DATE 12-31-07
CHECKED JE DATE 12-31-07 SCALE

CONTRACT NO. 02011-PGB-06-CN-EN SHEET 866

Plotted by sprague
Plotted 03-JAN-2008 17:08
DGN=G:\JOBS\22474-PGBT\Sheets\Bridge\B30dBS02.dgn, ON=[0-63]

SUMMARY OF ESTIMATED QUANTITIES

ITEM / DESCRIPTION	ITEM 416 DRILLED SHAFT		ITEM 420 CLASS "C" CONCRETE (ABUT)	ITEM 420 CLASS "C" CONCRETE (BENT)	ITEM 420 CLASS "C" CONCRETE (D.S. WALL)	ITEM 420 CLASS "S" CONCRETE (APPR SLAB)	ITEM 422 REINFORCED CONCRETE SLAB	ITEM 434 SLIDING ELASTOMERIC BEARING (SE5)	ITEM 423 RETAINING WALL (FASCIA) (TYPE C PANEL)	ITEM 434 ELASTOMERIC BEARING (IE5)	ITEM 442 STRU STEEL * (RAILROAD THROUGH GIRDER)	ITEM 442 STRU STEEL MISCELLANEOUS	ITEM 458 WATERPROOF (TY1)	ITEM 863 BALLASTED TRACK CONSTRUCTION
	LF (54"DIA)	LF (60"DIA)	CY	CY	CY	CY	SF	EA	SF	EA	LB	LB	SY	LF
DART RAILROAD UNDERPASS														
2 - ABUTMENTS	1,661		109.4		123.5	17.2		4	3,221					
1 - BENT		105		91.8						4				
2 - THROUGH PLATE GIRDER SPANS (177.00')							104.6				715,000	208	425	197
TOTAL	1,661	105	109.4	91.8	123.5	17.2	104.6	4	3,221	4	715,000	208	425	197

* CONTRACTOR SHALL REFER TO THE GENERAL NOTES FOR THE PAINTING REQUIREMENTS.

BEARING SEAT ELEVATIONS

	GIRDER 1	GIRDER 2
ABUT 1 (FWD)	479.98	479.98
BENT 2 (BK)	479.35	479.35
(FWD)	479.33	479.33
ABUT 3 (BK)	478.09	478.09

STATE OF TEXAS
JINGGANG CAO
88343
LICENSED
PROFESSIONAL ENGINEER

1-3-08

NO.	DATE	REVISION	APPROV.

PRESIDENT GEORGE BUSH TURNPIKE

NTTA
NORTH TEXAS TOLLWAY AUTHORITY

DART RAILROAD UNDERPASS
SUMMARY OF ESTIMATED QUANTITIES & BEARING SEAT ELEVATIONS

PB Parsons Brinckerhoff Quade & Douglas, Inc.
2777 Stemmons Freeway
Suite 1133
Dallas, TX 75207

SECTION XXX

DRAWN CPS DATE 12-31-07 DESIGNED JGC DATE 12-31-07
CHECKED JE DATE 12-31-07 SCALE

CONTRACT NO. 02011-PGB-06-CN-EN SHEET 867

Plotted By foleye
Plotted 07-JAN-2008 11:49
DGN=g:\Jobs\22474-PGBT\Sheets\Bridge\B300QT40.dgn, ON=[1-64]
Plotted 07-JAN-2008 11:49

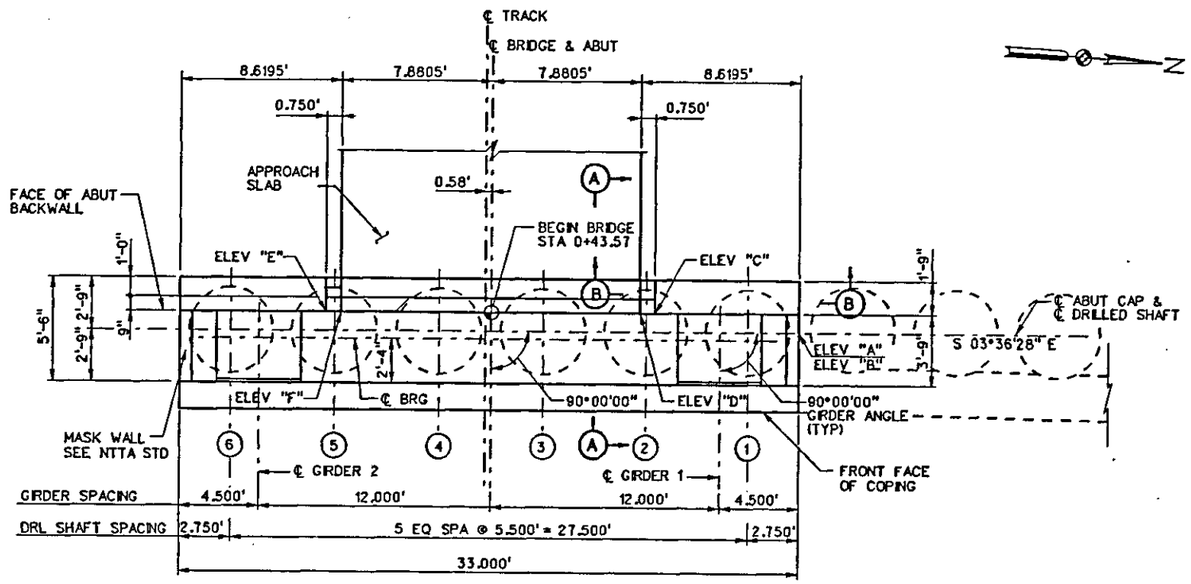

PLAN
SCALE: 1/8"=1'-0"

BEARING SEAT ELEVATION
479.98

ELEVATIONS							
A	B	C	D	E	F	G	H
479.66	475.66	486.13	483.84	486.13	483.84	460.35	460.44

GENERAL NOTES

1. BACKFILL ABUTMENT WITH SELECT STRUCTURAL BACKFILL MATERIAL PER NTTA SPECIFICATION.
2. FOUNDATION DESIGN SERVICE LOAD 175 TONS/SHAFT

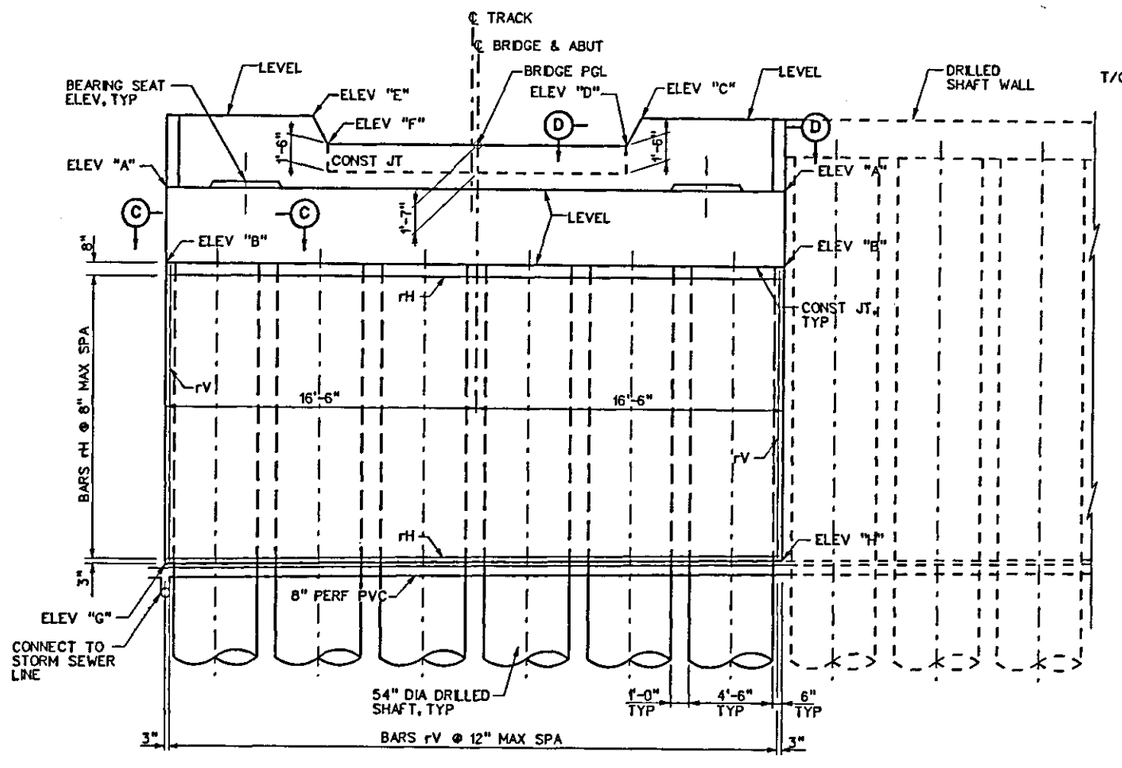

ELEVATION
SCALE: 1/8"=1'-0"

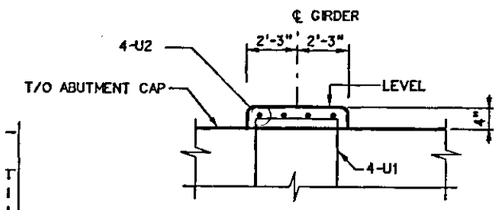

BEARING SEAT DETAIL
NO SCALE

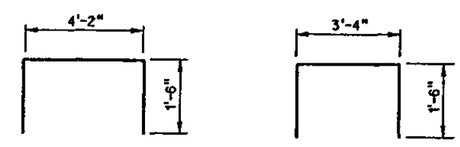

BAR U1 BAR U2

STATE OF TEXAS JINGGANG CAO 88343 LICENSED PROFESSIONAL ENGINEER 1-3-08

NO.	DATE	REVISION	APPROV.

PRESIDENT GEORGE BUSH TURNPIKE

NTTA NORTH TEXAS TOLLWAY AUTHORITY

DART RAILROAD UNDERPASS

ABUTMENT NO. 1

PB Parsons Brinckerhoff Quade & Douglas, Inc. 2711 Stemmons Freeway Suite 833 Dallas, TX 75207

SECTION XXX

DRAWN CPS DATE 12-31-07 DESIGNED JGC DATE 12-31-07
CHECKED JE DATE 12-31-07 SCALE AS NOTED

CONTRACT NO. 02011-PGB-06-CN-EN SHEET 868

Plotted By spraguer
Plotted 03-JAN-2008 17:09
DGN=G:\JOBS\22474-PGBT\Sheets\Bridge\B30dVD20.dgn, DN=(0-62)

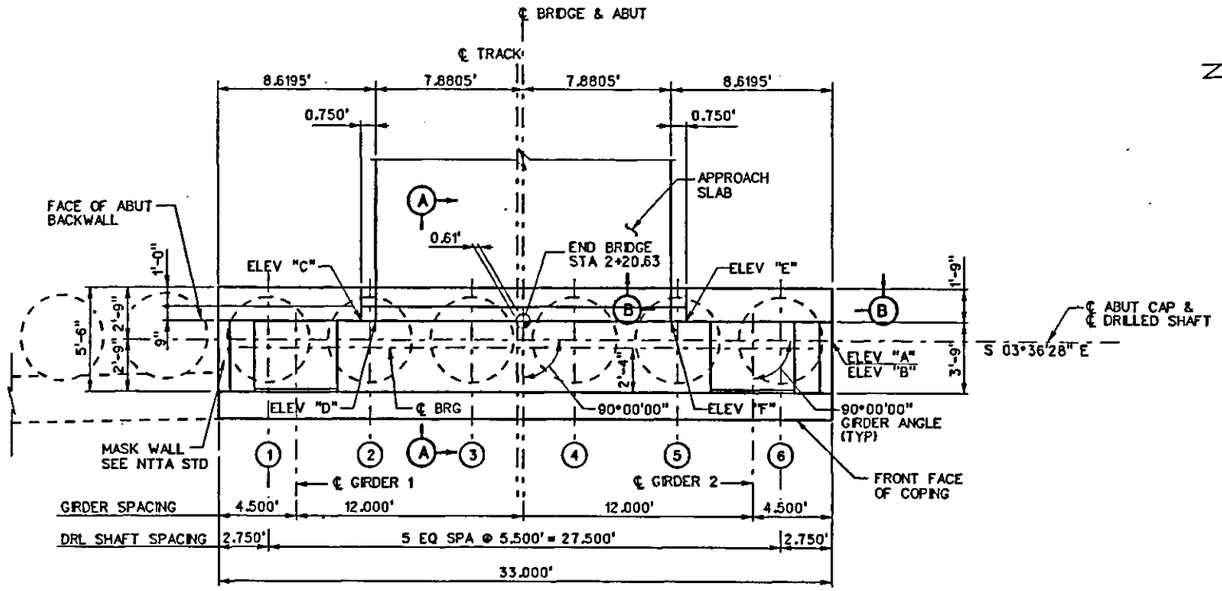

PLAN
SCALE: 1/8"=1'-0"

BEARING SEAT ELEVATION
478.09

ELEVATIONS							
A	B	C	D	E	F	G	H
477.75	473.75	484.20	481.92	484.20	481.92	460.49	460.31

GENERAL NOTES

1. BACKFILL ABUTMENT WITH SELECT STRUCTURAL BACKFILL MATERIAL PER NTTA SPECIFICATION.
2. FOUNDATION DESIGN SERVICE LOAD 175 TONS/SHAFT

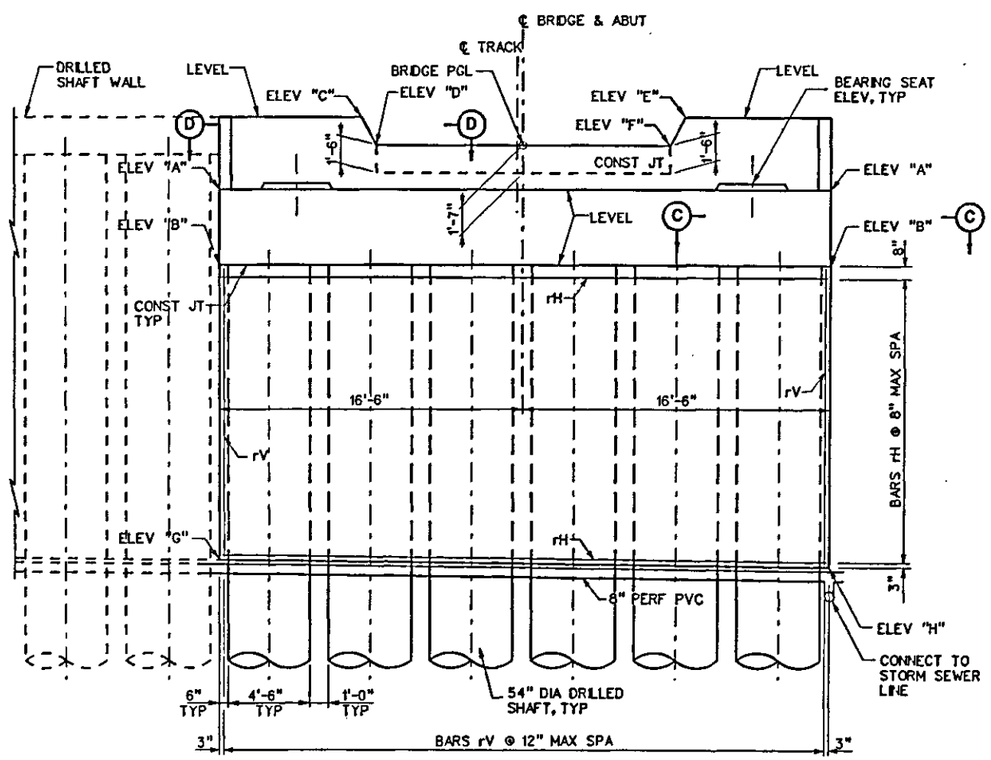

ELEVATION
SCALE: 1/8"=1'-0"

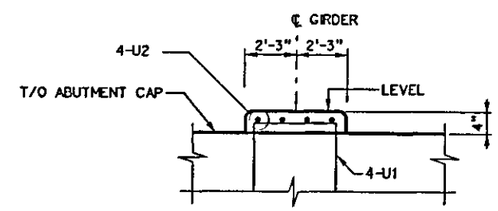

BEARING SEAT DETAIL
NO SCALE

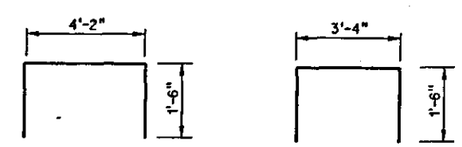

BAR U1 BAR U2

STATE OF TEXAS JINGANG CAO 88343 LICENSED PROFESSIONAL ENGINEER 1-3-08

NO.	DATE	REVISION	APPROV.

PRESIDENT GEORGE BUSH TURNPIKE

NTTA NORTH TEXAS TOLLWAY AUTHORITY

DART RAILROAD UNDERPASS

ABUTMENT NO. 3

Parsons Brinckerhoff Quade & Douglas, Inc. 2777 Stemmons Freeway Suite 1033 Dallas, TX 75207

SECTION XXX

DRAWN CPS DATE 12-31-07 DESIGNED JGC DATE 12-31-07
CHECKED JE DATE 12-31-07 SCALE AS NOTED

CONTRACT NO. 02011-PGB-06-CN-EN SHEET 869

Plotted By: sprague
Plotted 03-JAN-2008 17:09
DGN=G:\JOBS\22474-PGBT\Sheets\Bridge\B30aV021.dgn, ON=[0-63]

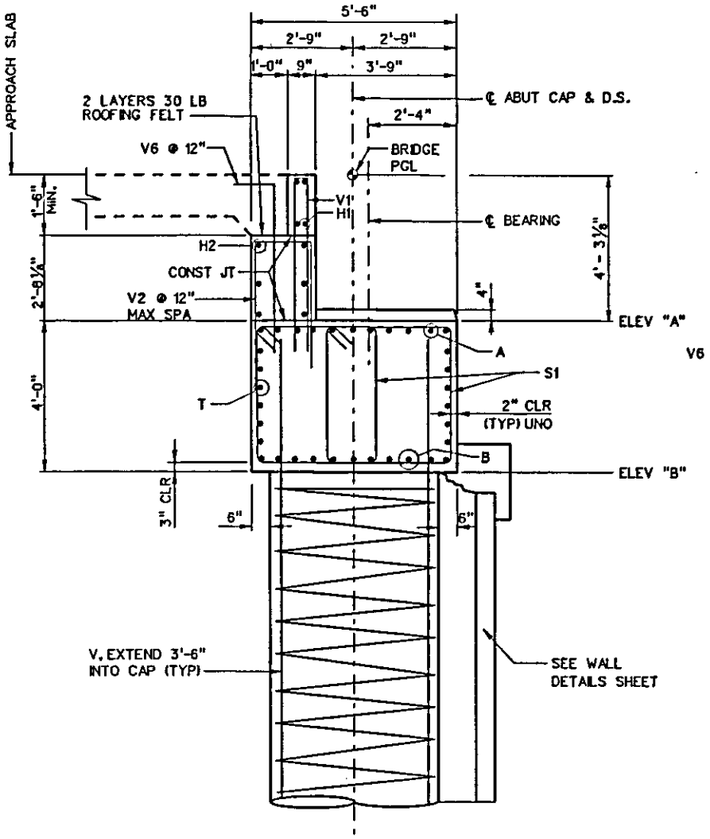

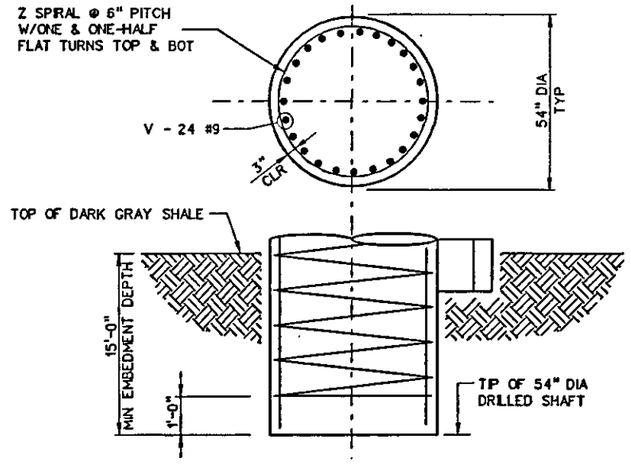

SECTION A-A
SCALE: ¼"= 1'-0"

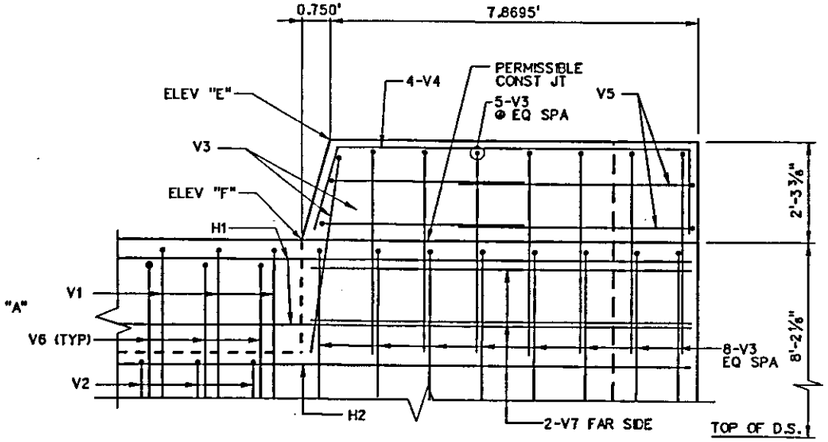

SECTION B-B
SCALE: ¼"=1'-0"

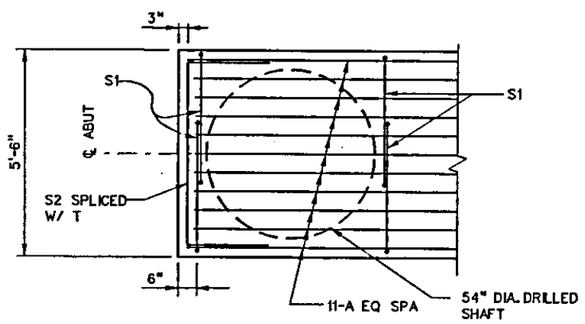

SECTION C-C
SCALE: ½"=1'-0"

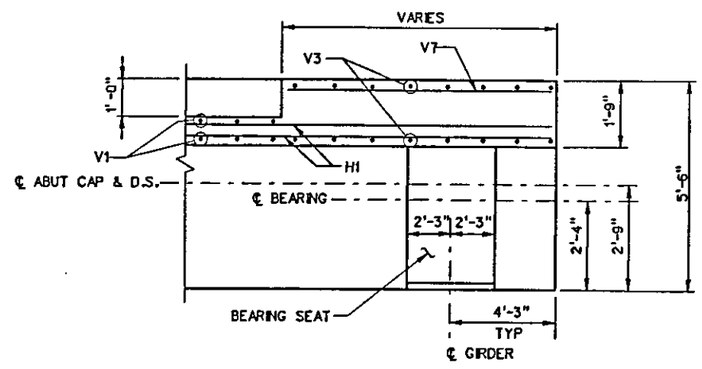

SECTION D-D
SCALE: ½"=1'-0"

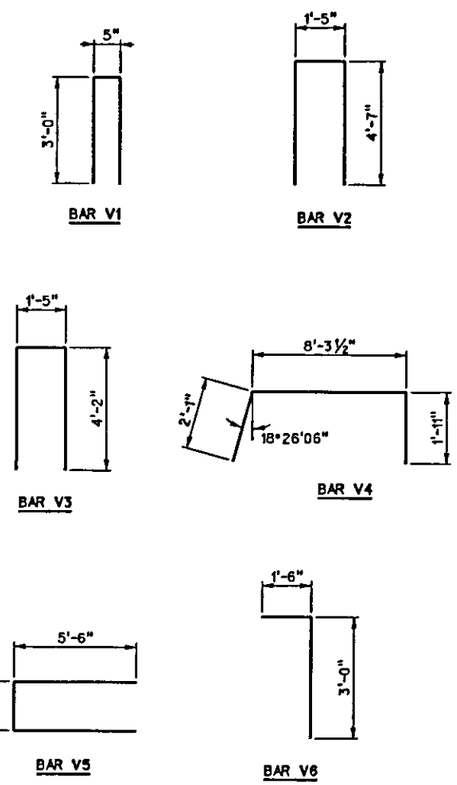

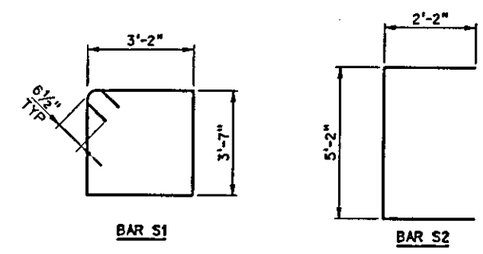

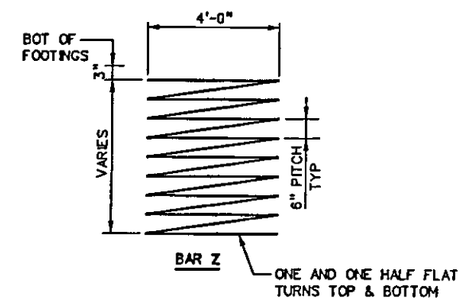

TABLE OF ESTIMATED QUANTITIES

BAR	NO.	SIZE	LENGTH	WEIGHT
A	11	#11	32'- 6"	1899
B	11	#11	32'- 6"	1899
H1	4	#4	32'- 6"	87
H2	6	#4	32'- 6"	130
S1	66	#5	14'- 7"	1004
S2	24	#5	9'- 6"	238
T	12	#8	32'- 6"	1041
U1	8	#4	7'- 2"	38
U2	8	#4	3'- 5"	18
V1	17	#4	6'- 1"	69
V2	17	#4	10'- 5"	118
V3	16	#4	13'- 5"	143
V4	8	#4	12'-3½"	66
V5	16	#4	12'- 5"	133
V6	17	#4	4'- 6"	51
V7	8	#4	9'- 0"	48
REINFORCING STEEL			LB	6,984
CLASS "C" CONCRETE			CY	37.4

GENERAL NOTES

1. CONSTRUCT BEARING SEAT AS FOLLOWS: THE AREA UNDER THE BUILT UP PORTION IS TO BE PREPARED IN ACCORDANCE WITH SPECIFICATION REQUIREMENTS FOR CONSTRUCTION JOINTS. THE BEARING SEAT SHALL THEN BE PLACED USING A STRUCTURAL NON-SHRINK GROUT, APPROVED BY THE CONTRACTING OFFICER, MIXED IN ACCORDANCE WITH THE MANUFACTURER'S RECOMMENDATIONS.
2. THE MINIMUM DRILLED SHAFT EMBEDMENT DEPTH INTO SHALE SHALL BE 15 FEET.

STATE OF TEXAS — JINGGANG CAO — 88343 — LICENSED PROFESSIONAL ENGINEER

1-3-08

NO.	DATE	REVISION	APPROV.

PRESIDENT GEORGE BUSH TURNPIKE

NTTA
NORTH TEXAS TOLLWAY AUTHORITY

DART RAILROAD UNDERPASS
ABUTMENT DETAILS

Parsons Brinckerhoff Quade & Douglas, Inc.
2777 Stemmons Freeway
Suite 833
Dallas, TX 75207

SECTION XXX

DRAWN CPS DATE 12-31-07 DESIGNED JGC DATE 12-31-07
CHECKED JE DATE 12-31-07 SCALE AS NOTED

CONTRACT NO. 02011-PGB-06-CN-EN SHEET 870

② INCLUDE IN PRICE BID FOR DRILLED SHAFT

③ ADJUST AS REQUIRED TO MAINTAIN 12" MIN BELOW FINISHED GRADE

① PRECAST PANEL SUPPLIER SHALL SUBMIT DETAILS AND PROCEDURES FOR PANEL / CLOSURE WALL CONNECTION FOR APPROVAL BY THE ENGINEER

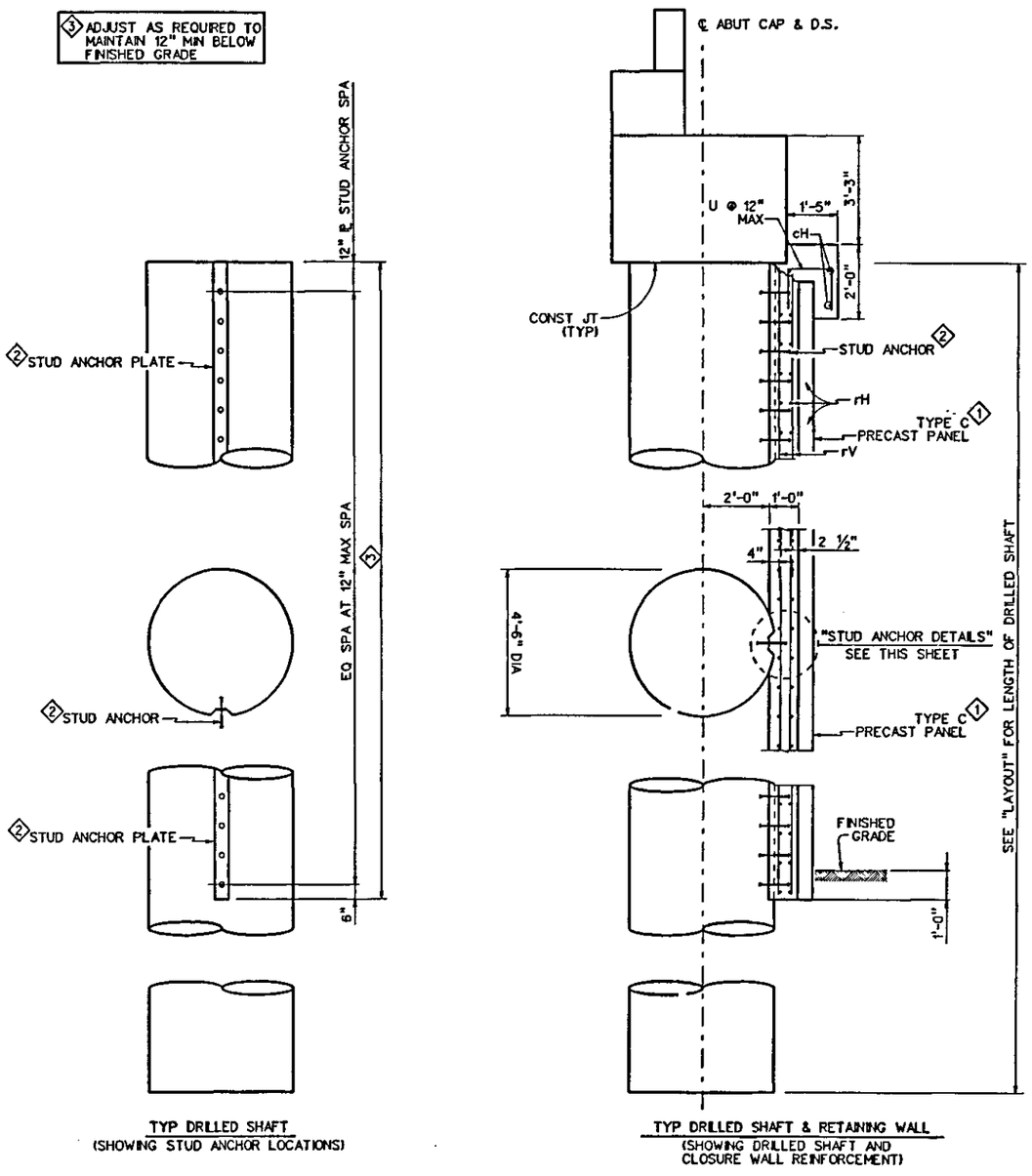

TYP DRILLED SHAFT
(SHOWING STUD ANCHOR LOCATIONS)

TYP DRILLED SHAFT & RETAINING WALL
(SHOWING DRILLED SHAFT AND CLOSURE WALL REINFORCEMENT)

RETAINING WALL AND DRILLED SHAFT DETAILS

SCALE: ¼" = 1'-0"

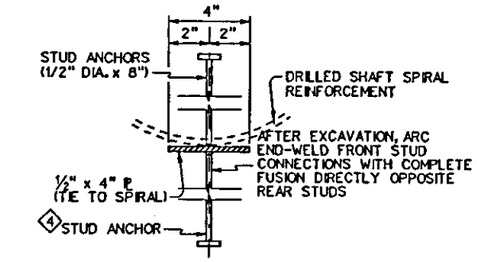

STUD ANCHOR DETAILS

④ IF DRILLED SHAFTS ARE MISALIGNED, STUD LENGTH SHALL BE ADJUSTED TO PROVIDE APPROXIMATELY 3" COVER FROM BACK FACE OF PANEL TO THE STUD HEAD. STUD ANCHORS SHALL BE SUBSIDIARY TO THE ITEM "DRILLED SHAFTS"

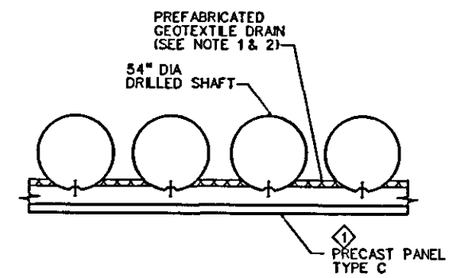

SECTION THRU WALL

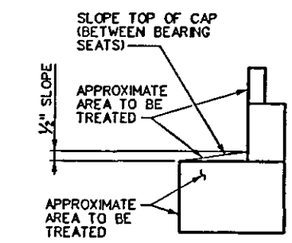

WATERPROOFING DETAIL

THE FACE OF BACKWALL, TOP, FRONT, AND ENDS OF THE CAP, EXCEPT BEARING SEATS, SHALL BE TREATED WITH A CLASS II SEALER PER "CONCRETE SURFACE TREATMENT"

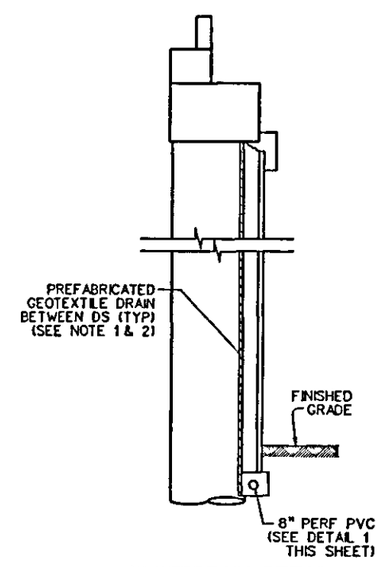

UNDERDRAIN DETAIL

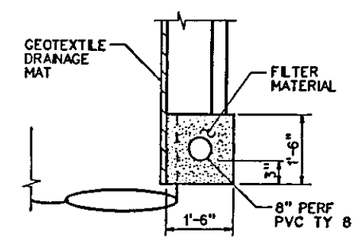

DETAIL 1

TABLE OF ESTIMATED QUANTITIES

	Bar	No.	Size	Length	Weight
ABUT 1	cH	3	#5	32'-8"	102
	rH	46	#6	32'-8"	2257
	U	33	#4	3'-4"	73
	rV	66	#5	15'-0"Avg	1033
	Reinforcing Steel ①			Lb	3465
	Class 'C' Concrete			CY	20.8
	Precast Panel (Ty C) ①			SF	504
ABUT 3	cH	3	#5	32'-8"	102
	rH	40	#6	32'-8"	1963
	U	33	#4	3'-4"	73
	rV	66	#5	13'-1"Avg	901
	Reinforcing Steel ①			Lb	3039
	Class 'C' Concrete			CY	18.4
	Precast Panel (Ty C) ①			SF	441
	Total Reinforcing Steel ①			Lb	6504
	Total Class 'C' Concrete			CY	39.2
	Total Precast Panel (Ty C)			SF	945

① PROVIDED FOR CONTRACTORS INFORMATION ONLY. QUANTITIES SHOWN ARE APPROXIMATE AND CONSIDERED SUBSIDIARY TO CLASS "C" CONCRETE (ABUTMENT).

GENERAL NOTES

1. GEOTEXTILE DRAINAGE MAT SHALL BE 0.8" ENKADRAIN BY AKZO OR EQUIVALENT.
2. DRAINAGE MAT AND 8" PERF PVC W/ GRAVEL TRENCH (TY 8) SHALL BE CONSIDERED SUBSIDIARY TO CLASS "C" CONCRETE.
3. SEE NTTA STD "RWD-006(1)-2005" FOR COPING TURNDOWN DETAIL TYPE 1

STATE OF TEXAS — JINGGANG CAO — 88343 — LICENSED — PROFESSIONAL ENGINEER

1-3-08

NO.	DATE	REVISION	APPROV.

PRESIDENT GEORGE BUSH TURNPIKE

NTTA
NORTH TEXAS TOLLWAY AUTHORITY

DART RAILROAD UNDERPASS
ABUTMENT DRILLED SHAFT WALL DETAILS

Parsons Brinckerhoff Quade & Douglas, Inc.
2777 Stemmons Freeway
Suite 833
Dallas, TX 75207

SECTION XXX

DRAWN CPS DATE 12-31-07 DESIGNED JGC DATE 12-31-07
CHECKED JE DATE 12-31-07 SCALE AS NOTED

CONTRACT NO. 02011-PGB-06-CN-EN SHEET 871

Plotted By:sprabuer
Plotted 03-JAN-2008 17:09
DGN=G:\JOBS\22474-PGBT\Sheets\Bridge\B30aV022a.dgn, ON=[0-63]

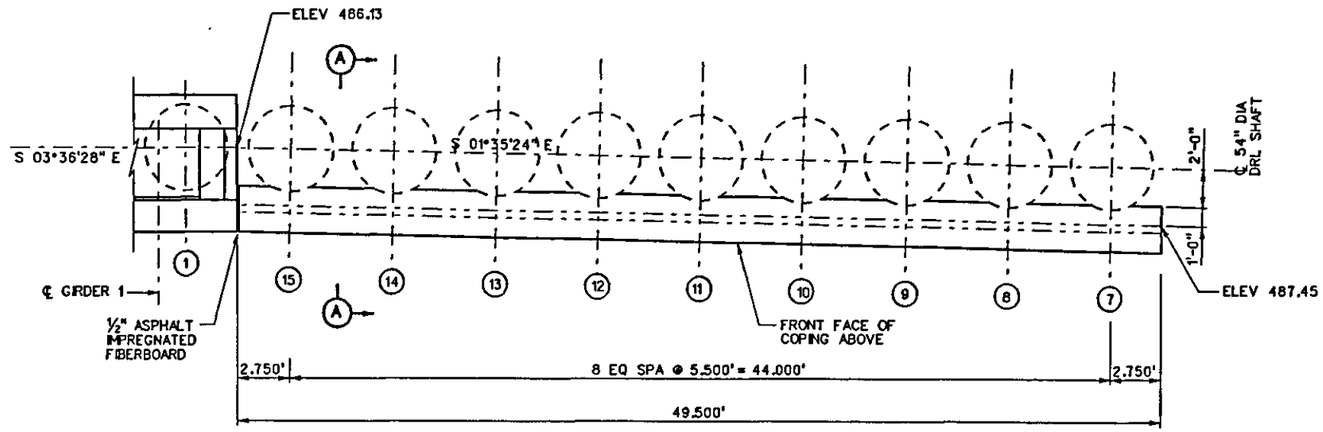

PLAN
SCALE: ⅛"=1'-0"

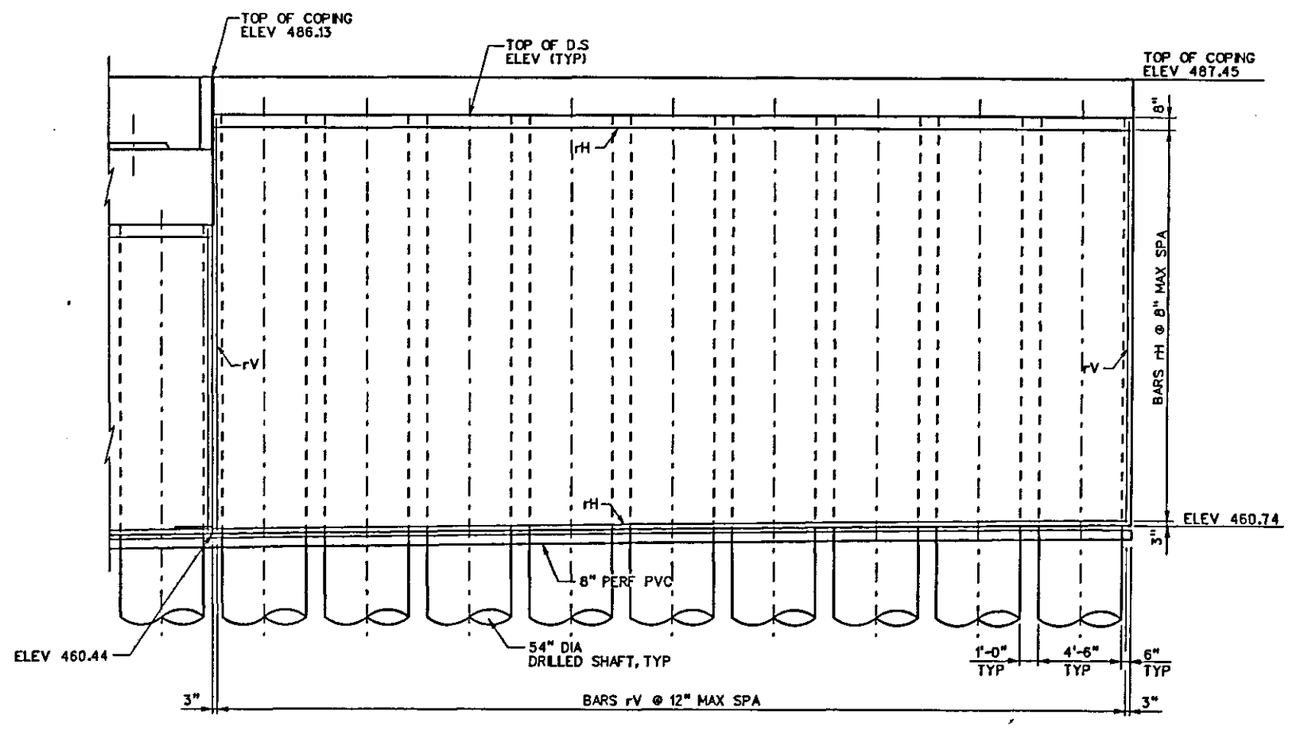

ELEVATION
SCALE: ⅛"=1'-0"

GENERAL NOTES

1. BACKFILL DRILLED SHAFT WALL WITH SELECT STRUCTURAL BACKFILL MATERIAL PER NTTA SPECIFICATION.
2. FOUNDATION DESIGN SERVICE LOAD 175 TONS/SHAFT

D.S.	TOP OF D.S. EL
7	485.38
8	485.23
9	485.08
10	484.94
11	484.79
12	484.64
13	484.50
14	484.35
15	484.20

STATE OF TEXAS
JINGGANG CAO
88343
LICENSED
PROFESSIONAL ENGINEER
1-3-08

NO.	DATE	REVISION	APPROV.

PRESIDENT GEORGE BUSH TURNPIKE

NTTA
NORTH TEXAS TOLLWAY AUTHORITY

DART RAILROAD UNDERPASS
ABUTMENT 1
DRILLED SHAFT WALL

Parsons Brinckerhoff Quade & Douglas, Inc.
8711 Stemmons Freeway
Suite 1033
Dallas, TX 75207

SECTION XXX

DRAWN CPS DATE 12-31-07
CHECKED JE DATE 12-31-07
DESIGNED JGC DATE 12-31-07
SCALE AS NOTED

CONTRACT NO. 02011-PGB-06-CN-EN SHEET 872

Plotted 03-JAN-2008 17:09

Plotted by sprogue
Plotted 03-JAN-2008 17:09
DGN=gt\Jobs\22474-PGBT\Sheets\Bridge\B30aVD38.dgn, QN=EQ-623

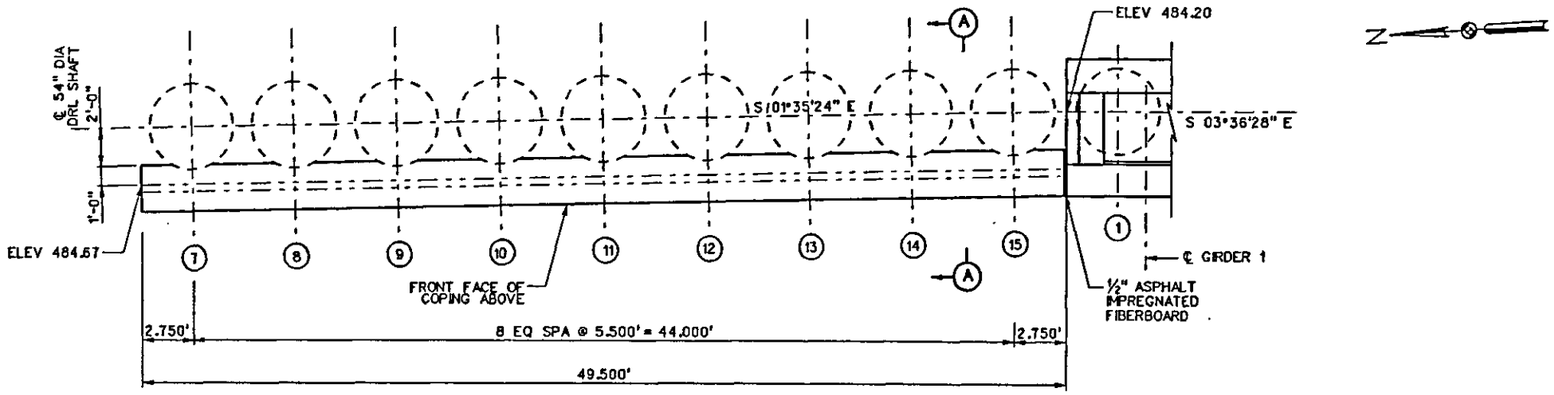

PLAN
SCALE: 1/8"=1'-0"

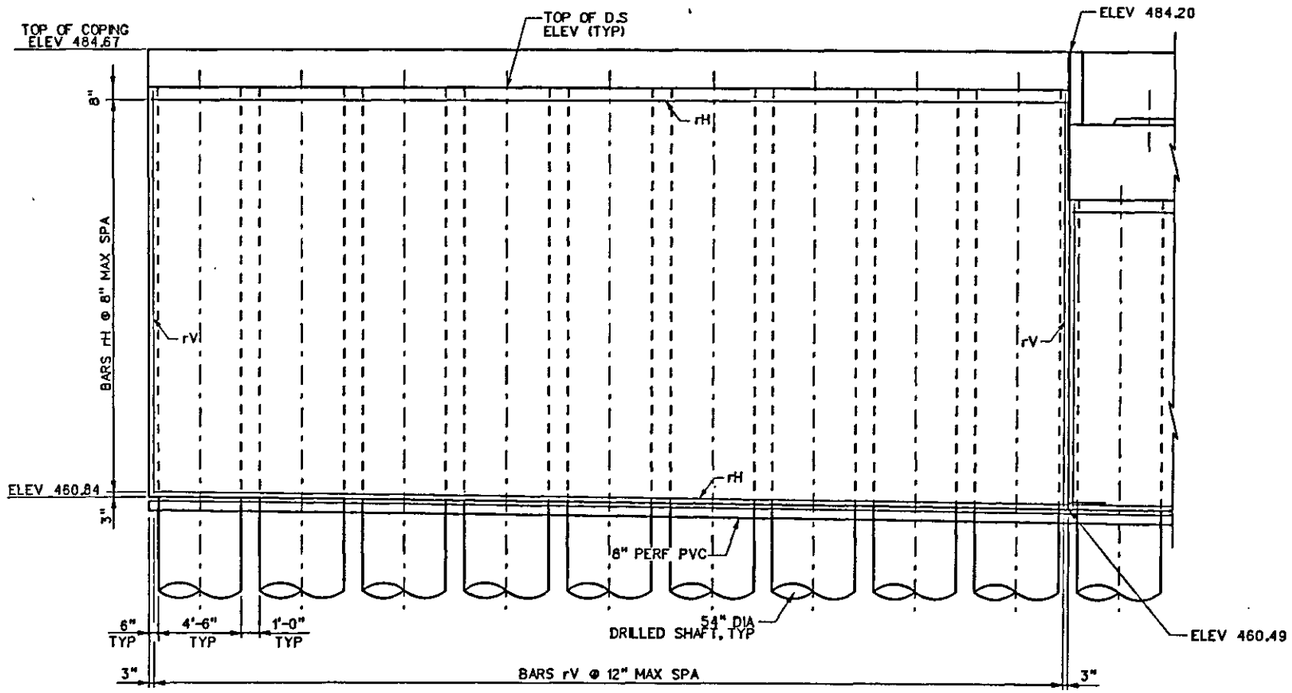

ELEVATION
SCALE: 1/8"=1'-0"

GENERAL NOTES

1. BACKFILL DRILLED SHAFT WALL WITH SELECT STRUCTURAL BACKFILL MATERIAL PER NTTA SPECIFICATION.
2. FOUNDATION DESIGN SERVICE LOAD 175 TONS/SHAFT

D.S.	TOP OF D.S. EL
7	482.64
8	482.59
9	482.54
10	482.49
11	482.44
12	482.38
13	482.33
14	482.28
15	482.23

STATE OF TEXAS
JINGGANG CAO
88343
LICENSED
PROFESSIONAL ENGINEER
1-3-08

NO.	DATE	REVISION	APPROV.

PRESIDENT GEORGE BUSH TURNPIKE

NTTA
NORTH TEXAS TOLLWAY AUTHORITY

DART RAILROAD UNDERPASS
ABUTMENT 3
DRILLED SHAFT WALL

Parsons Brinckerhoff Quade & Douglas, Inc.
2777 Stemmons Freeway
Suite 833
Dallas, TX 75207

SECTION XXX

DRAWN CPS DATE 12-31-07 DESIGNED JGC DATE 12-31-07
CHECKED JE DATE 12-31-07 SCALE AS NOTED

CONTRACT NO. 02011-PGB-06-CN-EN SHEET 873

Plotted 03-JAN-2008 17:09

Plotted By aprouser
Plotted 03-JAN-2008 17:09
DGN=gi\Jobs\22474-PGBT\Sheets\Bridge\B30aVD39.dgn, ON=EO-623

② INCLUDE IN PRICE BID FOR DRILLED SHAFT

① PRECAST PANEL SUPPLIER SHALL SUBMIT DETAILS AND PROCEDURES FOR PANEL / CLOSURE WALL CONNECTION FOR APPROVAL BY THE ENGINEER

③ ADJUST AS REQUIRED TO MAINTAIN 12" MIN BELOW FINISHED GRADE

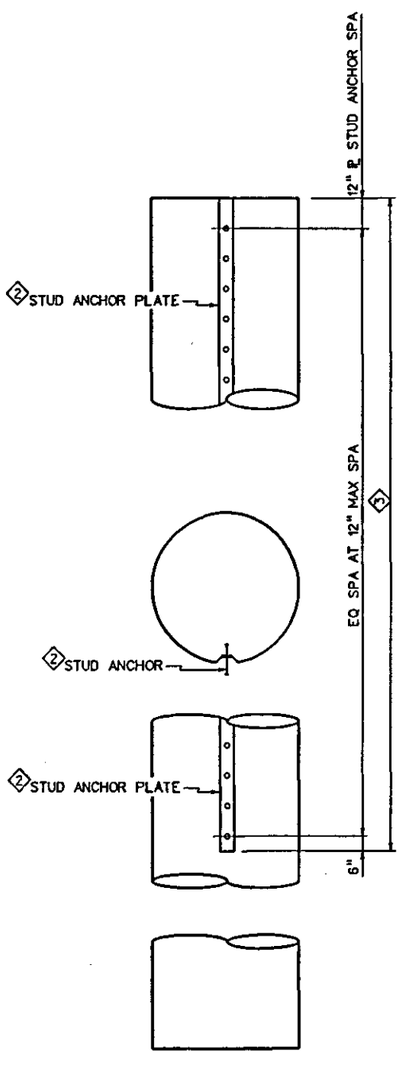

TYP DRILLED SHAFT
(SHOWING STUD ANCHOR LOCATIONS)

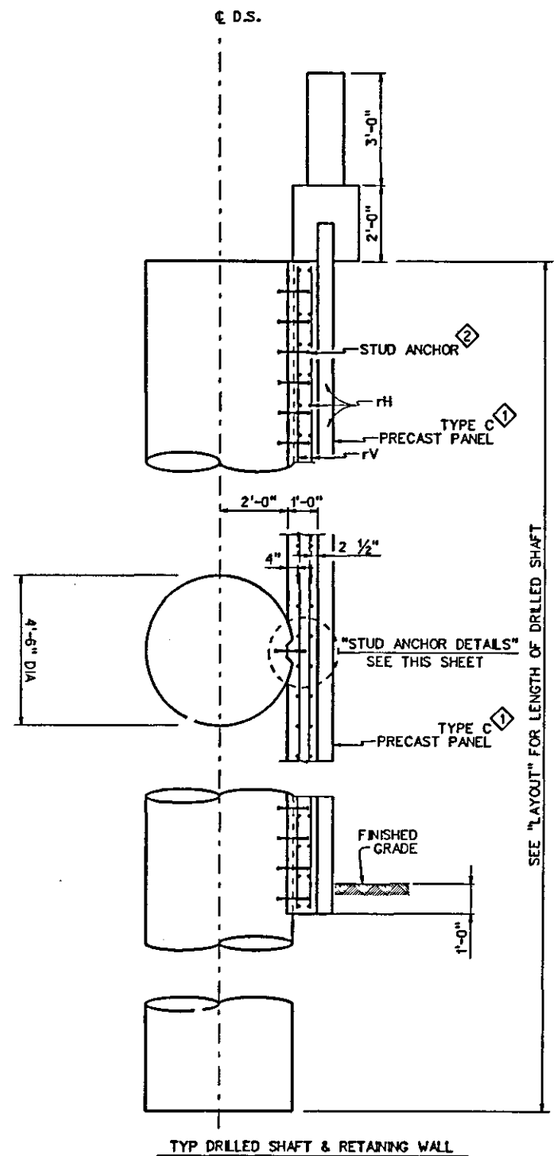

TYP DRILLED SHAFT & RETAINING WALL
(SHOWING DRILLED SHAFT AND CLOSURE WALL REINFORCEMENT)

RETAINING WALL AND DRILLED SHAFT DETAILS

SCALE: ¼" = 1'-0"

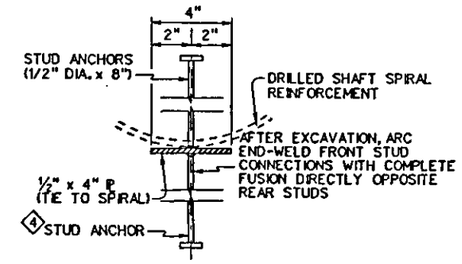

STUD ANCHOR DETAILS

④ IF DRILLED SHAFTS ARE MISALIGNED, STUD LENGTH SHALL BE ADJUSTED TO PROVIDE APPROXIMATELY 3" COVER FROM BACK FACE OF PANEL TO THE STUD HEAD. STUD ANCHORS SHALL BE SUBSIDIARY TO THE ITEM "DRILLED SHAFTS"

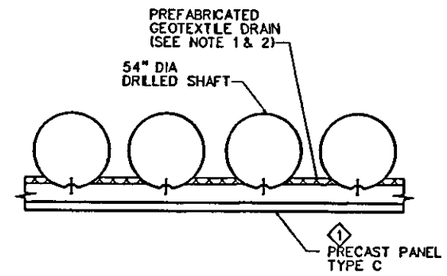

SECTION THRU WALL

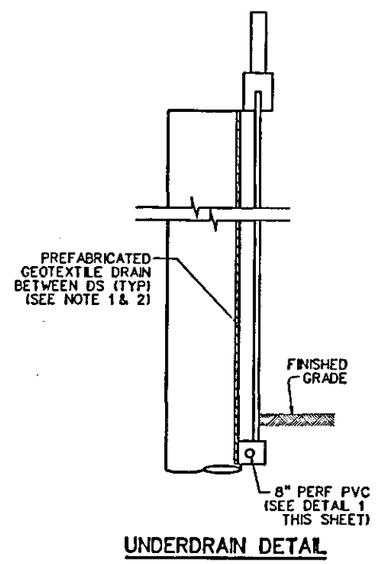

UNDERDRAIN DETAIL

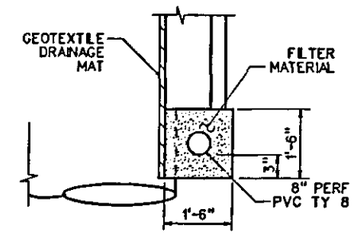

DETAIL 1

TABLE OF ESTIMATED QUANTITIES

	Bar	No.	Size	Length	Weight
ABUT 1	rH	74	#6	49'-2"	5465
	rV	100	#5	23'-11"Avg	2495
	Reinforcing Steel ①			Lb	7960
	Class 'C' Concrete			CY	44.4
	Precast Panel (Ty C) ①			SF	1198
ABUT 3	rH	66	#6	49'-2"	4874
	rV	100	#5	21'-3"Avg	2242
	Reinforcing Steel ①			Lb	7116
	Class 'C' Concrete			CY	39.9
	Precast Panel (Ty C) ①			SF	1078
	Total Reinforcing Steel ①			Lb	15076
	Total Class 'C' Concrete			CY	84.3
	Total Precast Panel (Ty C)			SF	2276

① PROVIDED FOR CONTRACTORS INFORMATION ONLY. QUANTITIES SHOWN ARE APPROXIMATE AND CONSIDERED SUBSIDIARY TO CLASS "C" CONCRETE (ABUTMENT).

GENERAL NOTES

1. GEOTEXTILE DRAINAGE MAT SHALL BE 0.8" ENKADRAIN BY AKZO OR EQUIVALENT.
2. DRAINAGE MAT AND 8" PERF PVC W/ GRAVEL TRENCH (TY 8) SHALL BE CONSIDERED SUBSIDIARY TO CLASS "C" CONCRETE.
3. SEE NTTA STD "RWD-006(1)-2005" FOR COPING TURNDOWN DETAIL TYPE 1
4. THE MINIMUM DRILLED SHAFT EMBEDMENT DEPTH INTO SHALE SHAL BE 15 FEET.

STATE OF TEXAS — JINGANG CAO — 88343 — LICENSED — PROFESSIONAL ENGINEER

1-3-08

NO.	DATE	REVISION	APPRV.

PRESIDENT GEORGE BUSH TURNPIKE

NTTA
NORTH TEXAS TOLLWAY AUTHORITY

DART RAILROAD UNDERPASS
DRILLED SHAFT
WALL DETAILS

Parsons Brinckerhoff Quade & Douglas, Inc.
2777 Stemmons Freeway
Suite 633
Dallas, TX 75207

SECTION XXX

DRAWN CPS DATE 12-31-07 DESIGNED JGC DATE 12-31-07
CHECKED JE DATE 12-31-07 SCALE AS NOTED

CONTRACT NO. 02011-PGB-06-CN-EN SHEET 274

Plotted By sprauer
Plotted 03-JAN-2008 17:09
DGN-gt:\Jobs\22474-PGBT\Sheets\Bridge\B30aV040.dgn, ON=EO-633

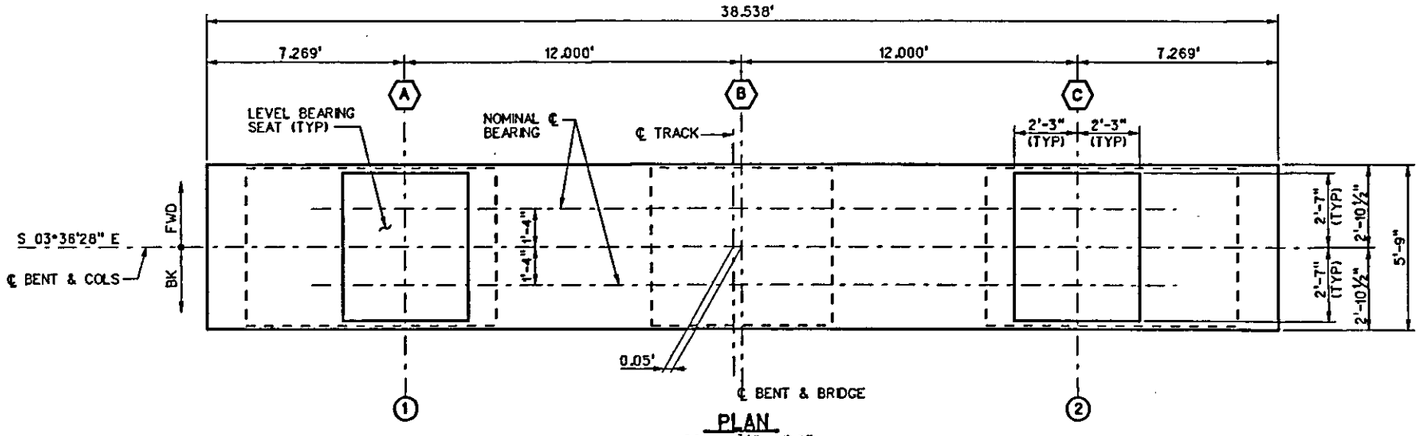

PLAN
SCALE: 3/16" = 1'-0"

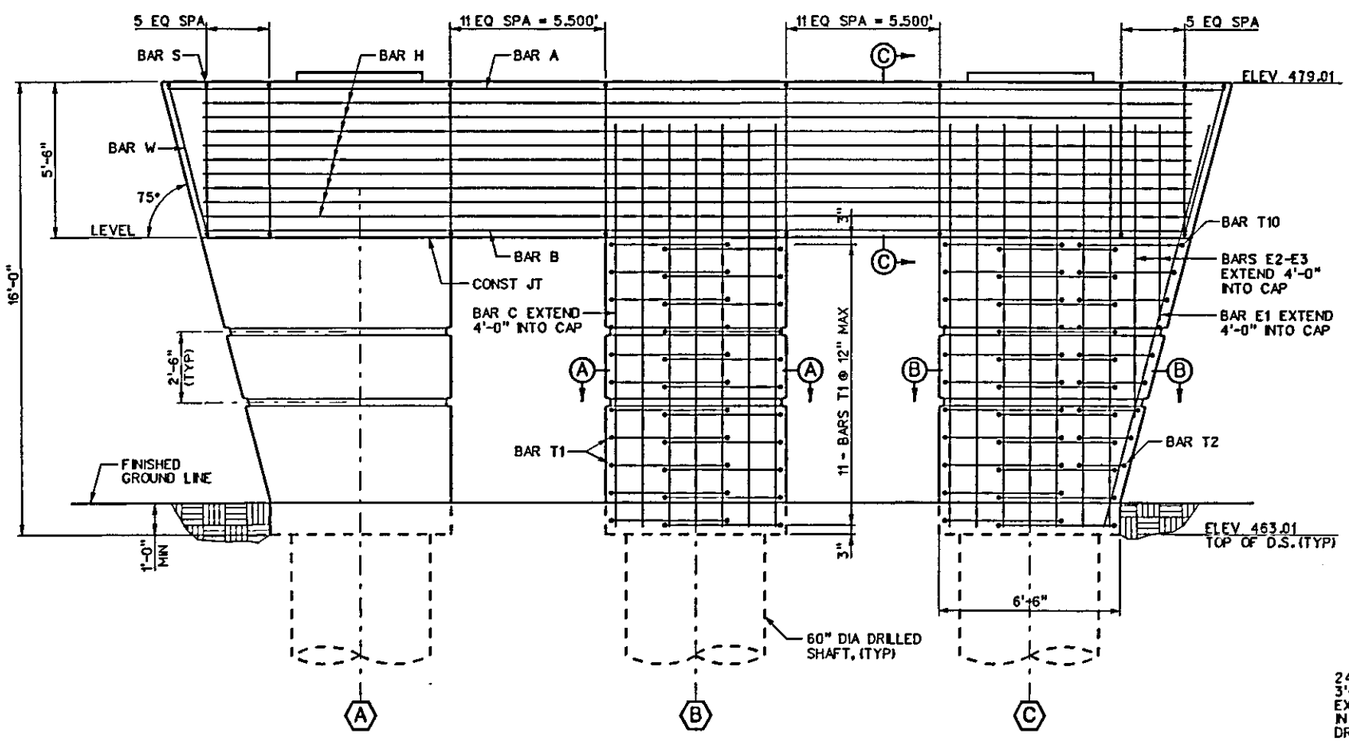

ELEVATION
SCALE: 3/16" = 1'-0"

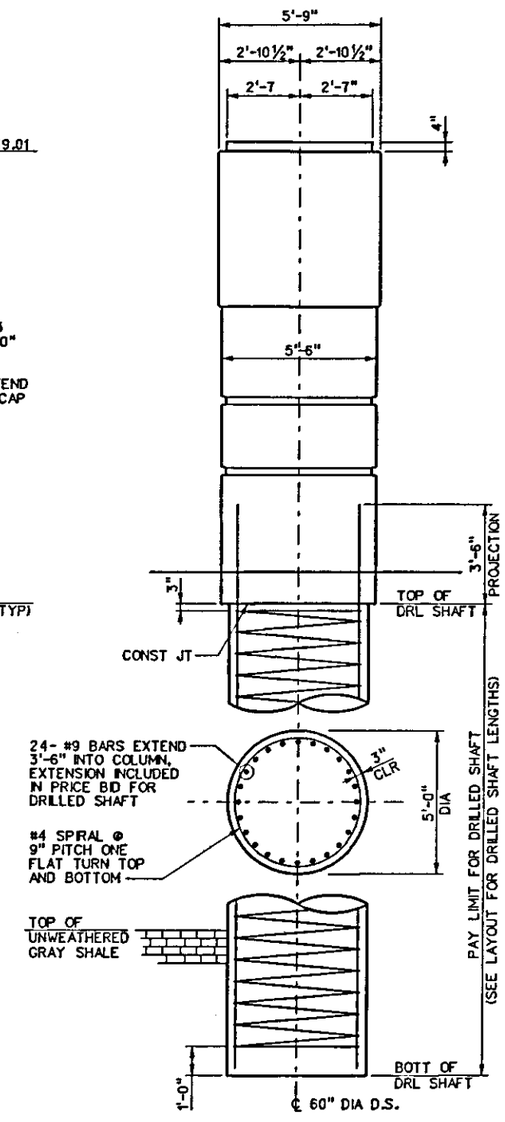

GENERAL NOTES

1. ALL CONCRETE FOR BENTS, AND DRILLED SHAFTS SHALL BE CLASS "C" WITH MINIMUM COMPRESSIVE STRENGTH f'c = 3600 PSI.
2. CHAMFER ALL EXPOSED CORNERS ¾" UNLESS OTHERWISE SHOWN OR NOTED.
3. ALL REINFORCING STEEL SHALL BE ASTM A-615, GRADE 60.
4. ALL REINFORCING STEEL SHALL HAVE 2" CLEAR COVER UNLESS OTHERWISE SHOWN OR NOTED.
5. THE MINIMUM DRILLED SHAFT EMBEDMENT DEPTH INTO SHALE SHALL BE 23 FEET.
6. FOUNDATION DESIGN SERVICE LOAD = 406 TONS PER DRILLED SHAFT.
7. FOR AESTHETIC BENT DETAILS, SEE NTTA STD "ABD-001(1)-2004 AND ABD-001(2)-2005..

○ DENOTES GIRDER NUMBER.
⬡ DENOTES COLUMN NUMBER.

STATE OF TEXAS — JINGGANG CAO — 88343 — LICENSED — PROFESSIONAL ENGINEER
1-3-08

NO.	DATE	REVISION	APPROV.

PRESIDENT GEORGE BUSH TURNPIKE

NTTA
NORTH TEXAS TOLLWAY AUTHORITY

DART RAILROAD UNDERPASS

BENT NO. 2

Parsons Brinckerhoff Quade & Douglas, Inc.
2777 Stemmons Freeway
Suite 833
Dallas, TX 75207

SECTION XXX

DRAWN CPS DATE 12-31-07 DESIGNED JGC DATE 12-31-07
CHECKED JE DATE 12-31-07 SCALE AS SHOWN

CONTRACT NO. 02011-PGB-06-CN-EN SHEET 875

Plotted By 'prcguer'
Plotted 03-JAN-2008 17:09
DGN=G:\JOBS\22474-PGBT\Sheets\Bridge\B30akd21.dgn, ON=[0-63]

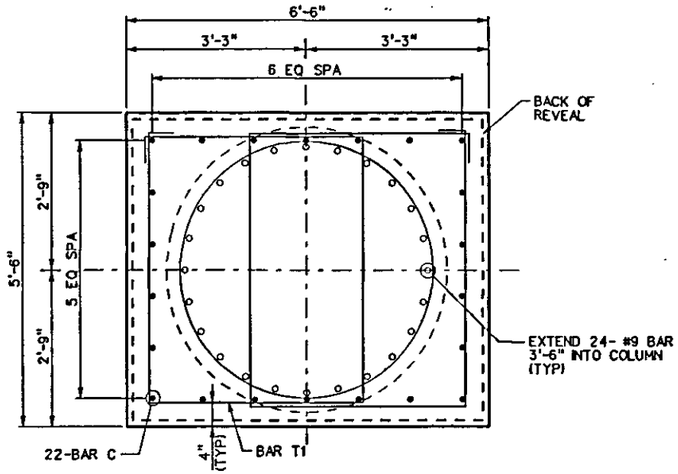

SECTION A-A
SCALE: 3/8" = 1'-0"

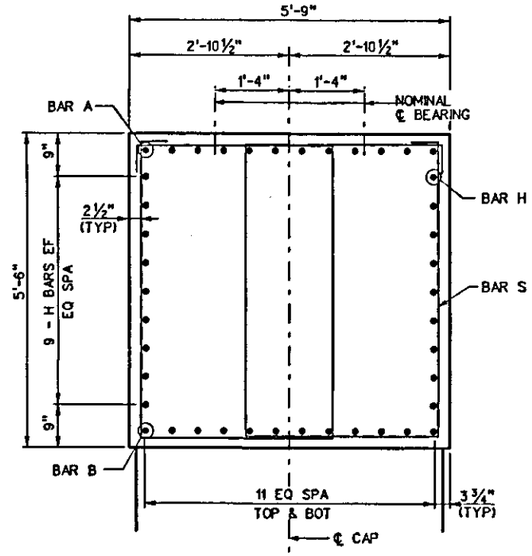

SECTION C-C
SCALE: 3/8" = 1'-0"

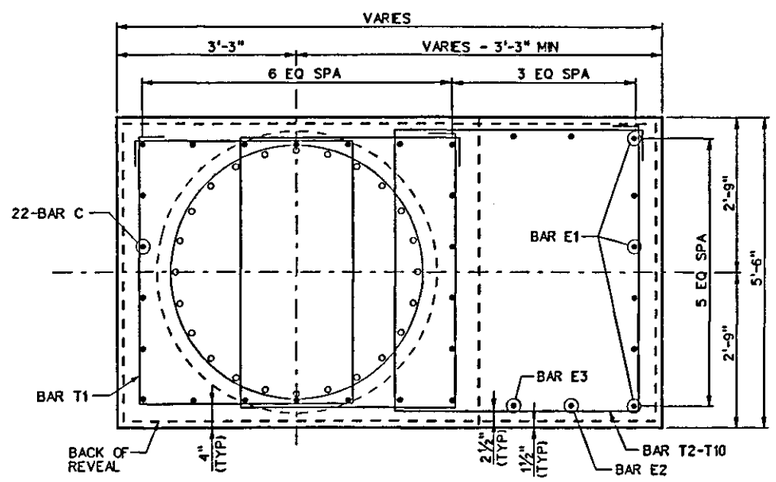

SECTION B-B
SCALE: 3/8" = 1'-0"

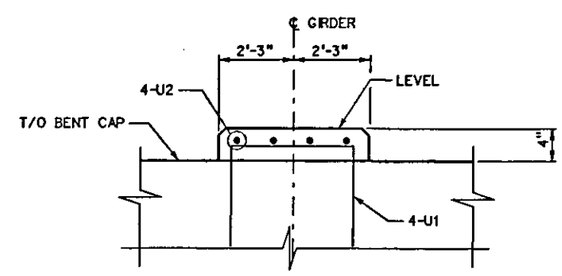

BEARING SEAT DETAIL
NO SCALE

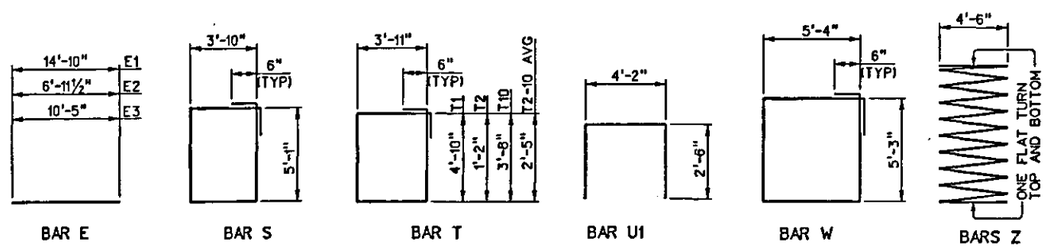

BAR BEND DIAGRAMS

TABLE OF CAP QUANTITIES (ONE CAP)

BAR	NO.	SIZE	LENGTH	WEIGHT
A	12	#11	38'-2"	2433
B	12	#11	35'-3"	2247
H	18	#5	35'-3"	662
S	72	#5	18'-10"	1414
U1	8	#4	9'-2"	49
U2	8	#4	4'-10"	26
W	2	#5	22'-2"	46
REINFORCING STEEL			LB	6877
CLASS "C" CONCRETE			CY	43.9

TABLE OF COLUMN QUANTITIES

COLUMN	"H"	CLASS "C" CONC (COL)	BARS C 22 - #9		BARS T1 22 - #5	
	FT	CY	LENGTH	WEIGHT	LENGTH	WEIGHT
A	10.50	17.0	14'-4"	1072	18'-6"	425
B	10.50	13.9	14'-4"	1072	18'-6"	425
C	10.50	17.0	14'-4"	1072	18'-6"	425
	TOTAL	47.9	TOTAL	3216	TOTAL	1275

COLUMN (ADDITIONAL)	BARS E1 6 - #9		BARS E2-E3 4 - #9		BARS T2-T10 9 - #5	
	LENGTH	WEIGHT	AVG LGTH	WEIGHT	AVG LGTH	WEIGHT
A	14'-10"	303	8'-8"	118	13'-8"	128
C	14'-10"	303	8'-8"	118	13'-8"	128
	TOTAL	606	TOTAL	326	TOTAL	256

ESTIMATED QUANTITY SUMMARY

	60" DIA DS	CLASS "C" CONC	① REINF STEEL
	LF	CY	LB
TOTAL	105	91.8	12556

① PROVIDED FOR CONTRACTORS INFORMATION ONLY. QUANTITIES SHOWN ARE APPROXIMATE AND CONSIDERED SUBSIDIARY TO OTHER ITEMS OF WORK.

STATE OF TEXAS — JINGGANG CAO — 88343 — LICENSED — PROFESSIONAL ENGINEER

1-3-08

NO.	DATE	REVISION	APPROV.

PRESIDENT GEORGE BUSH TURNPIKE

NTTA
NORTH TEXAS TOLLWAY AUTHORITY

DART RAILROAD UNDERPASS
BENT NO. 2 DETAILS

Parsons Brinckerhoff Quade & Douglas, Inc.
2777 Stemmons Freeway
Suite 833
Dallas, TX 75207

SECTION XXX

DRAWN CPS DATE 12-31-07 | DESIGNED JGC DATE 12-31-07
CHECKED JE DATE 12-31-07 | SCALE AS NOTED

CONTRACT NO. 02011-PGB-06-CN-EN SHEET 876

Plotted By-acrojuer
Plotted 03-JAN-2008 17:09
DGN=gt\Jobs\22474-PGBT\Sheets\Bridge\B30akd22.dgn, ON=[0-63]

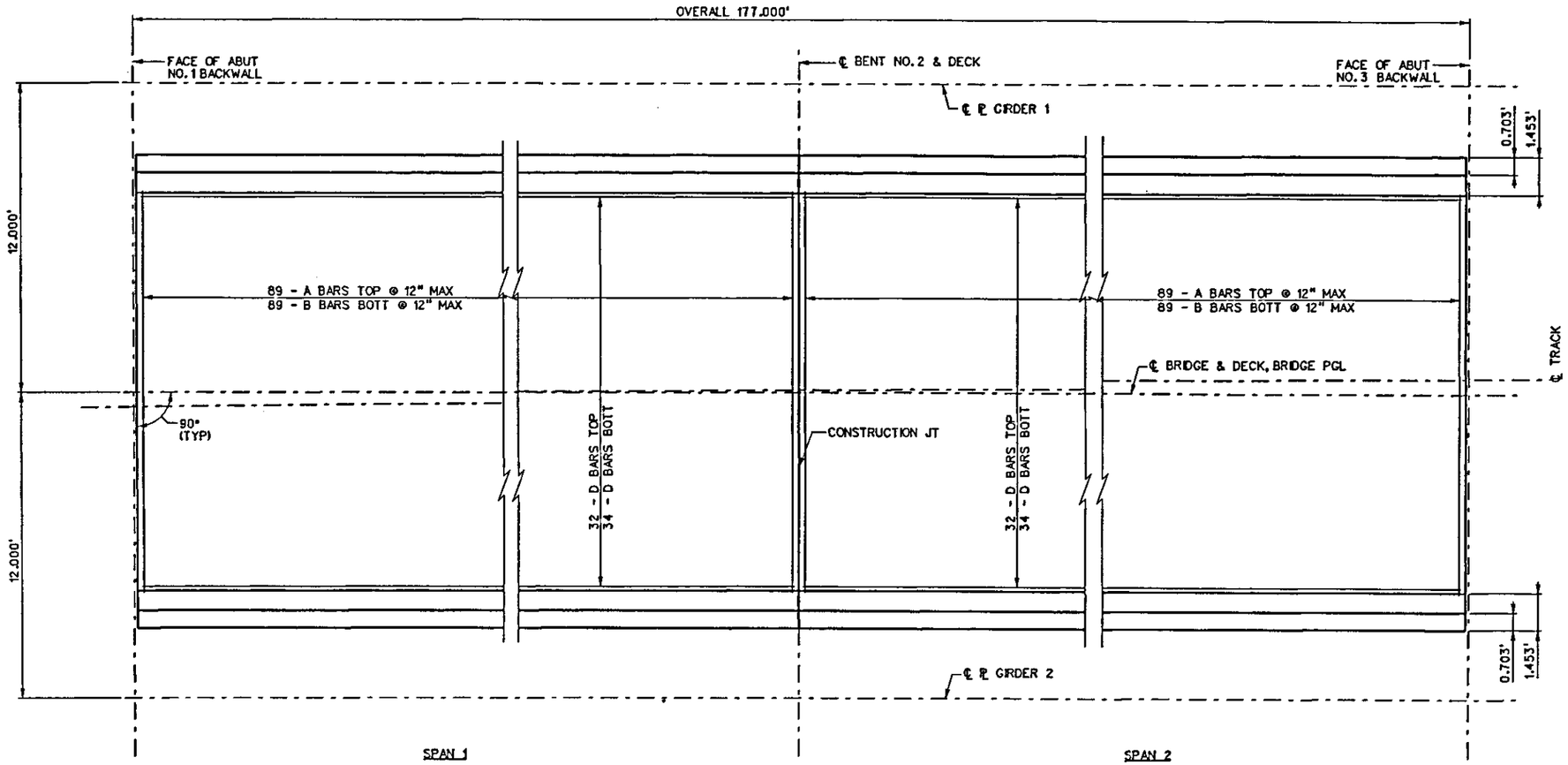

PLAN

SCALE: 3/16"=1'-0"

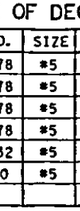

TABLE OF DECK QUANITIES				
BAR	NO.	SIZE	LENGTH	WEIGHT
A	178	#5	15'-6"	2,878
B	178	#5	16'-5½"	3,056
C1	178	#5	4'-11½"	921
C2	178	#5	5'-3¾"	946
D	132	#5	91'-11"	12,655
E	40	#5	91'-11"	3,835
REINFORCING STEEL				24,291
CLASS "C" CONCRETE			CY	963

GENERAL NOTES

1. ALL CAST-IN-PLACE CONCRETE SHALL BE CLASS "S", WITH MINIMUM COMPRESSIVE STRENGTH f'c = 4000 PSI.
2. ALL REINFORCING STEEL SHALL BE EPOXY COATED AND CONFORM TO ASTM A-615, GRADE 60.
3. CHAMFER ALL EXPOSED CORNERS ¾" UNLESS OTHERWISE SHOWN OR NOTED.
4. ALL REINFORCING STEEL SHALL HAVE 2" CLEAR COVER UNLESS OTHERWISE SHOWN OR NOTED.
5. BAR LAPS, WHERE REQUIRED SHALL BE AS FOLLOWS:
   EPOXY COATED
   #4 BARS = 2'-1"
   #5 BARS = 2'-7"

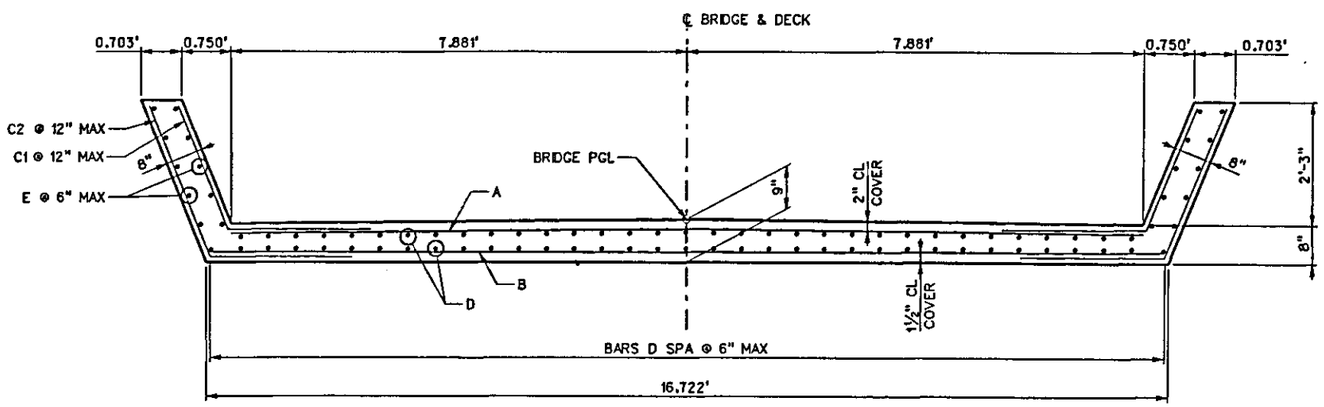

TYPICAL TRANSVERSE SECTION

SCALE: 3/8"=1'-0"

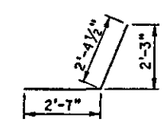

BARS C1

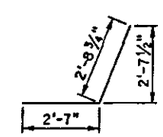

BARS C2

STATE OF TEXAS
JINGGANG CAO
88343
LICENSED
PROFESSIONAL ENGINEER

1-3-08

NO.	DATE	REVISION	APPROV.

PRESIDENT GEORGE BUSH TURNPIKE

NTTA
NORTH TEXAS TOLLWAY AUTHORITY

DART RAILROAD UNDERPASS
SLAB PLAN AND SECTION

Parsons Brinckerhoff Quade & Douglas, Inc.
2777 Stemmons Freeway
Suite 1313
Dallas, TX 75207

SECTION XXX

DRAWN CPS DATE 12-31-07 DESIGNED JGC DATE 12-31-07
CHECKED JE DATE 12-31-07 SCALE AS SHOWN

CONTRACT NO. 02011-PGB-06-CN-EN SHEET 877

Plotted By agrogler
Plotted 03-JAN-2008 17:09
DGN=G:\JOBS\22474-PGBT\Sheets\Bridge\B30aBA20.dgn, ON=[0-62]

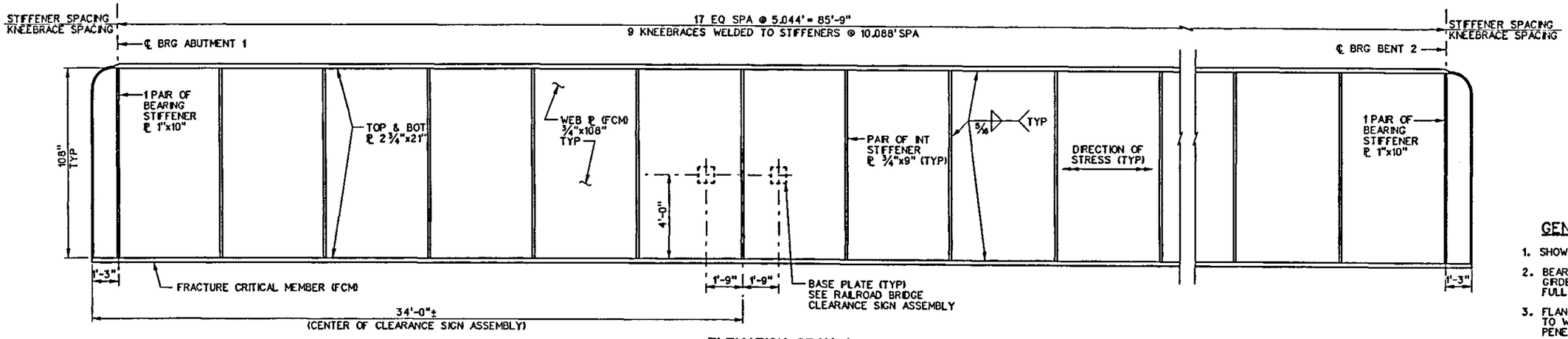

ELEVATION SPAN 1

SCALE: 3/16" = 1'-0"

GENERAL NOTES

1. SHOWING INTERIOR FACE OF GIRDER.
2. BEARING STIFFENERS AT ENDS OF GIRDERS SHALL BE VERTICAL UNDER FULL DEAD LOAD.
3. FLANGE PLATES SHALL BE CONNECTED TO WEB WITH CONTINUOUS, FULL PENETRATION GROOVE WELDS.

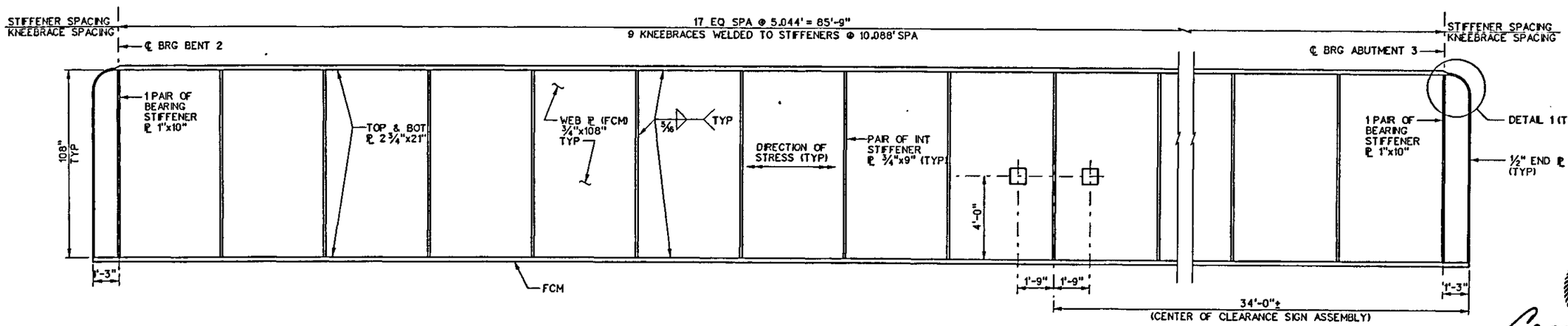

ELEVATION SPAN 2

SCALE: 3/16" = 1'-0"

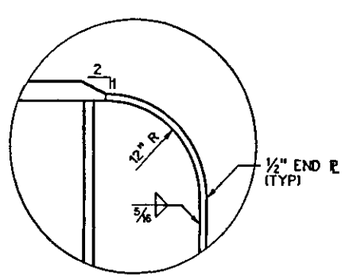

GIRDER END DETAIL 1

NTS

STATE OF TEXAS
JINGGANG CAO
88343
LICENSED
PROFESSIONAL ENGINEER

1-3-08

NO.	DATE	REVISION	APPROV.

PRESIDENT GEORGE BUSH TURNPIKE

NTTA
NORTH TEXAS TOLLWAY AUTHORITY

DART RAILROAD UNDERPASS

GIRDER 1 AND 2 ELEVATION

Parsons Brinckerhoff Quade & Douglas, Inc.
2777 Stemmons Freeway
Suite 0113
Dallas, TX 75207

SECTION XXX

DRAWN CPS	DATE 12-31-07	DESIGNED JGC	DATE 12-31-07
CHECKED JE	DATE 12-31-07	SCALE AS NOTED	

CONTRACT NO. 02011-PGB-06-CN-EN SHEET 878

Plotted By:aulinfanod
Plotted By:aulinfanod
Plotted 03-JAN-2008 21:00
DGN=g:\Jobs\22474-PGBT\Sheets\Bridge\B30aBD06.dgn, ON=(1-64)

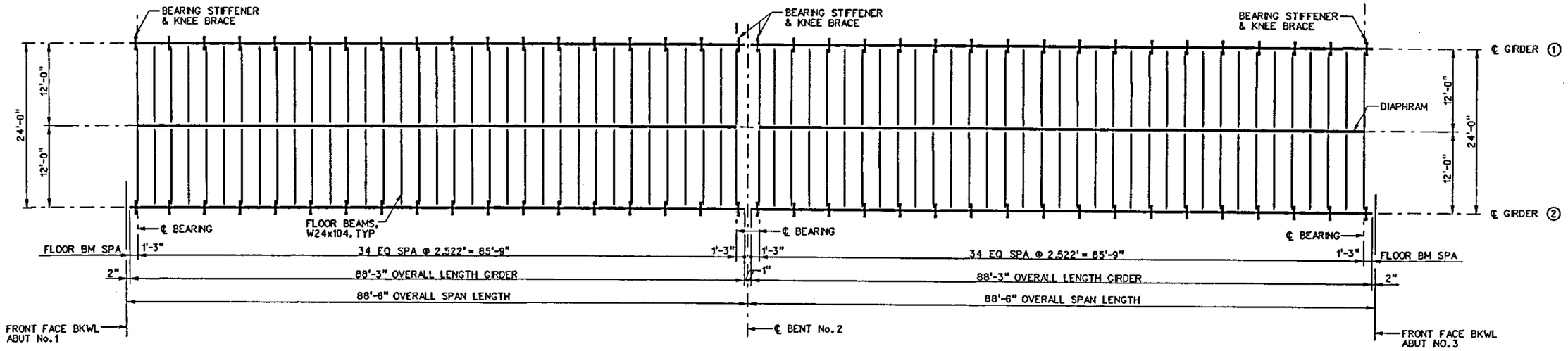

FRAMING PLAN

SCALE: 1/16"=1'-0"

STATE OF TEXAS
JINGGANG CAO
88343
LICENSED
PROFESSIONAL ENGINEER

Caojingg 1-3-08

NO.	DATE	REVISION	APPROV.

PRESIDENT GEORGE BUSH TURNPIKE

NTTA
NORTH TEXAS TOLLWAY AUTHORITY

DART RAILROAD UNDERPASS

FRAMING PLAN

Parsons Brinckerhoff Quade & Douglas, Inc.
2777 Stemmons Freeway
Suite 633
Dallas, TX 75207

SECTION XXX

DRAWN CPS DATE 12-31-07 DESIGNED JGC DATE 12-31-07
CHECKED JE DATE 12-31-07 SCALE

CONTRACT NO. 02011-PGB-06-CN-EN SHEET 879

Plotted 03-JAN-2008 18:42
DGN=g:\Jobs\22474-PGBT\Sheets\Bridge\B30amp10.dgn, ON=(1-64)
Plotted by:jinhong2

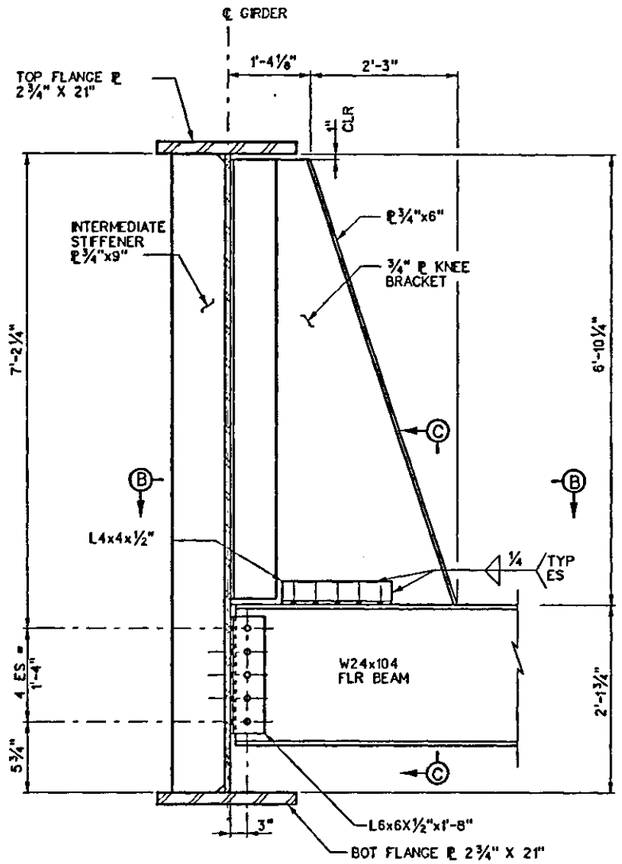

KNEE BRACE WITH INTERMEDIATE STIFFENER & FLOOR BEAM
SCALE: ⅜"= 1'-0"

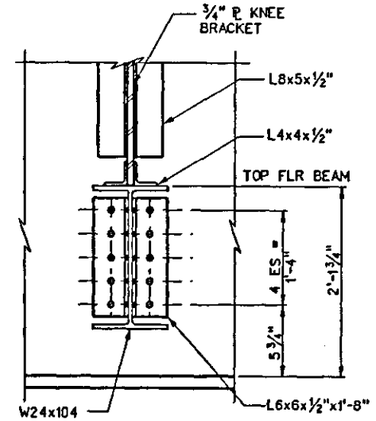

SECTION C-C
SCALE: ⅜"= 1'-0"

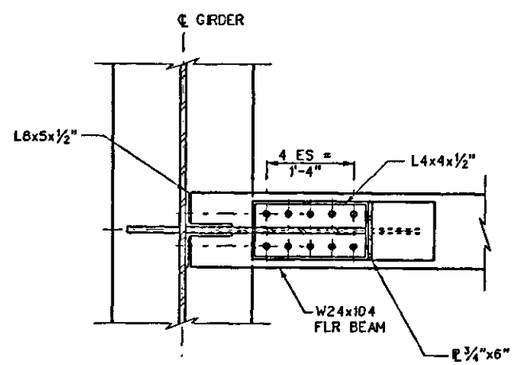

SECTION B-B
SCALE: ⅜"= 1'-0"

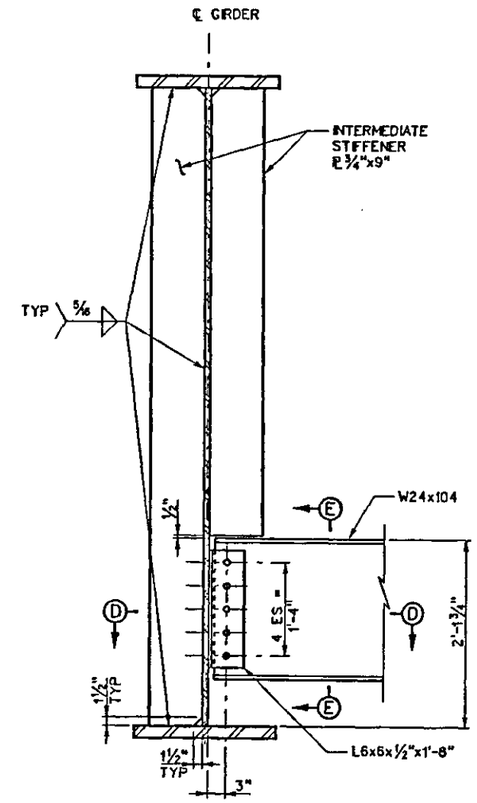

INTERMEDIATE STIFFENER & FLOOR BEAM
SCALE: ⅜"= 1'-0"

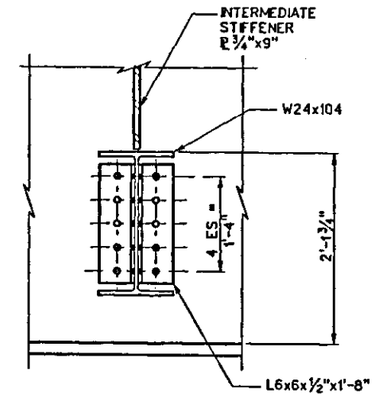

SECTION E-E
SCALE: ⅜"= 1'-0"

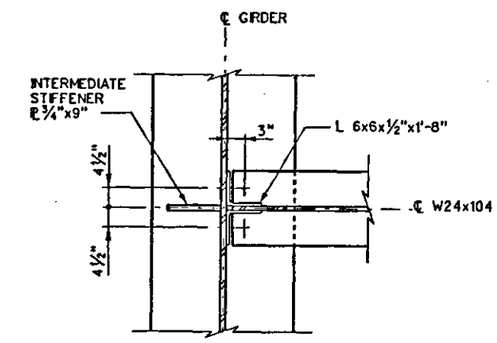

SECTION D-D
SCALE: ⅜"= 1'-0"

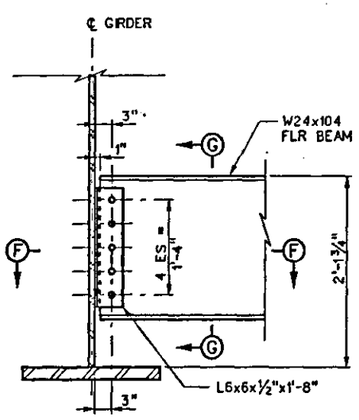

FLOOR BEAM
SCALE: ⅜"= 1'-0"

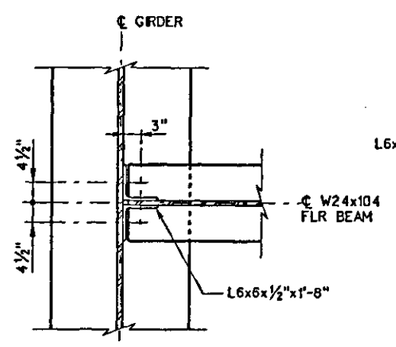

SECTION F-F
SCALE: ⅜"= 1'-0"

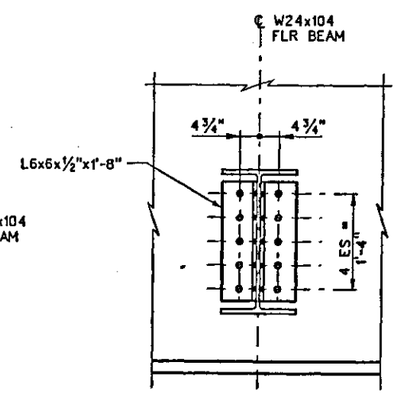

SECTION G-G
SCALE: ⅜"= 1'-0"

GENERAL NOTES

1. FLOOR BEAMS SHALL BE PLACED WITH ANY MILL CAMBER UP.
2. ALL BOLTS SHALL BE ⅞" DIA A325 BOLTS UNLESS OTHERWISE NOTED.
3. DETAILS TYPICAL ALL FLOOR BEAMS UNLESS OTHERWISE NOTED.
4. DECK DRAINS, BALLAST, TIES, AND RAILS NOT SHOWN FOR CLARITY.
5. CHECKER PLATE SHALL CONSIST OF ⅜" NON-SLIP STEEL FLOOR PLATE WITH A RAISED DIAMOND PATTERN, IN ACCORDANCE WITH THE SPECIFICATIONS "METAL FABRICATIONS".
6. ALL ANGLE CONNECTIONS ARE L4x4x1/2, UNO.

STATE OF TEXAS — JINGGANG CAO — 88343 — LICENSED — PROFESSIONAL ENGINEER
1-3-08

NO.	DATE	REVISION	APPROV.

PRESIDENT GEORGE BUSH TURNPIKE

NTTA
NORTH TEXAS TOLLWAY AUTHORITY

DART RAILROAD UNDERPASS
GIRDER AND FLOOR BEAM DETAILS

Parsons Brinckerhoff Quade & Douglas, Inc.
2777 Stemmons Freeway
Suite 833
Dallas, TX 75207

SECTION XXX

DRAWN CPS DATE 12-31-07 DESIGNED JGC DATE 12-31-07
CHECKED JE DATE 12-31-07 SCALE AS NOTED

SHEET 1 OF 2
CONTRACT NO. 02011-PGB-06-CN-EN SHEET 880

Plotted by sprequer
Plotted 03-JAN-2008 17:10
DGN=G:\JOBS\22474-PGBT\Sheets\Bridge\B30d8D01.dgn, ON=(0-633)

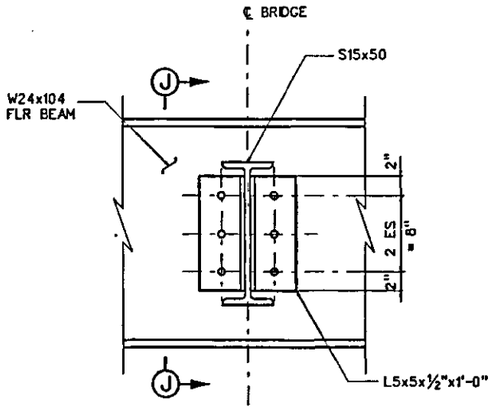

DIAPHRAGM ELEVATION
NTS

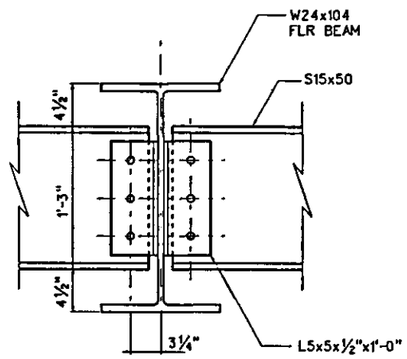

SECTION J-J
NTS

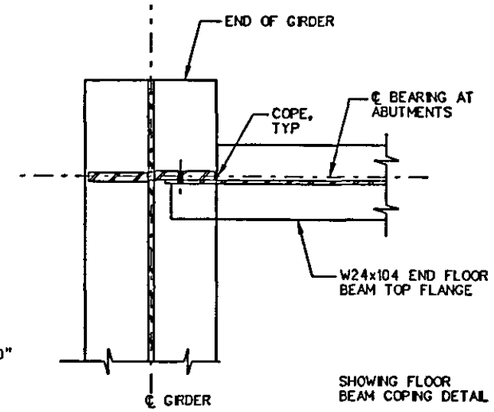

GIRDER 2 @ ABUT 1
GIRDER 1 @ ABUT 3

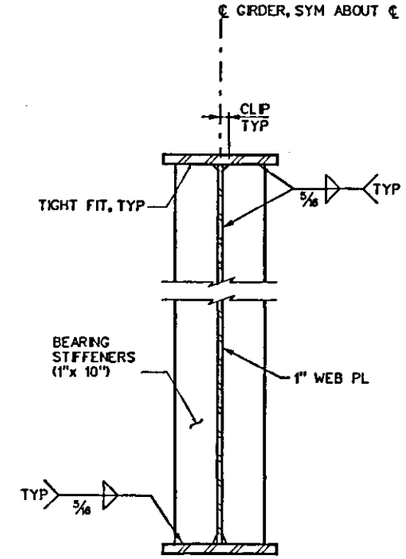

SECTION A-A
NTS
(BEARING STIFFENERS @ ABUTMENTS)

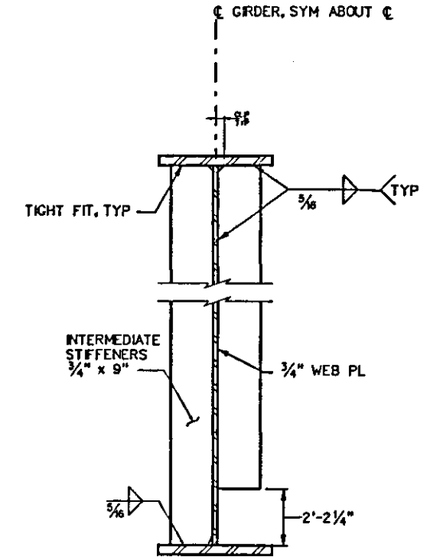

SECTION B-B
NTS
(INTERMEDIATE STIFFENER)

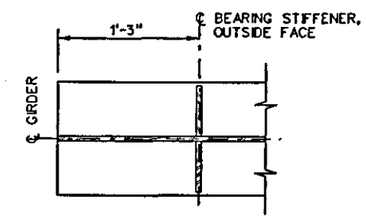

BEARING STIFFENER DETAIL
NTS

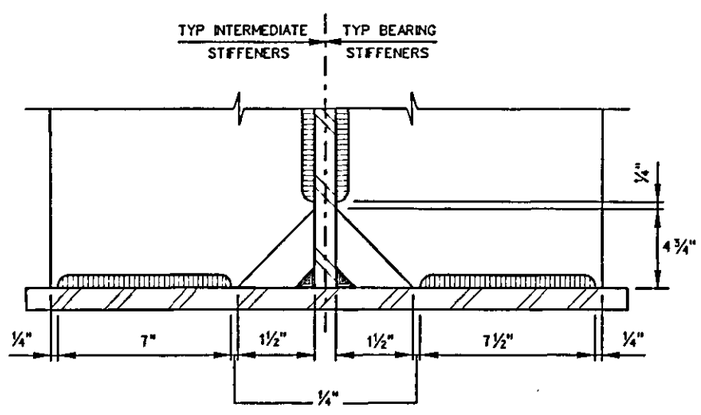

WELD TERMINATION DETAIL
NTS

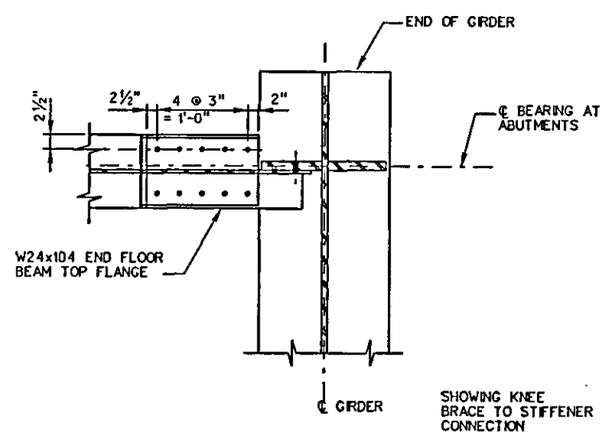

GIRDER 1 @ ABUT 3
GIRDER 2 @ ABUT 1

STATE OF TEXAS
JINGGANG CAO
88343
LICENSED
PROFESSIONAL ENGINEER
1-3-08

NO.	DATE	REVISION	APPROV.

PRESIDENT GEORGE BUSH TURNPIKE

NTTA
NORTH TEXAS TOLLWAY AUTHORITY

DART RAILROAD UNDERPASS
GIRDER AND FLOOR BEAM DETAILS

Parsons Brinckerhoff Quade & Douglas, Inc.
2777 Stemmons Freeway
Suite 833
Dallas, TX 75207

SECTION XXX

DRAWN CPS DATE 12-31-07 DESIGNED JGC DATE 12-31-07
CHECKED JE DATE 12-31-07 SCALE AS NOTED

SHEET 2 OF 2

CONTRACT NO. 02011-PGB-06-CN-EN SHEET 88

Plotted 03-JAN-2008 17:10

Plotted by jorgover
Plotted 03-JAN-2008 17:10
DGN=G:\JOBS\22474-PGBT\Sheets\Bridge\B30aBD05.dgn, ON=[0-63]

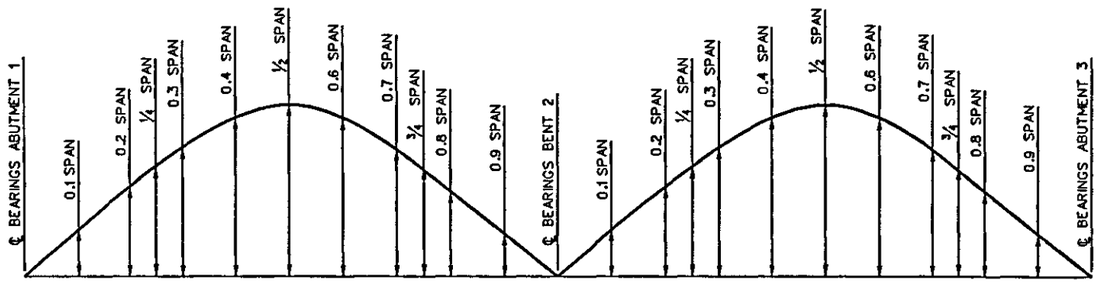

WEB CAMBER DIAGRAM

GIRDER	SPAN LOCATION	CAMBER COMPONENTS IN INCHES			
		DEAD LOAD ①	DEAD LOAD ②	DEAD LOAD ③	WEB CAMBER TOTAL DEAD LOAD
1 & 2	0.1	0.023	0.077	0.048	0.148
	0.2	0.043	0.146	0.091	0.280
	0.25	0.052	0.175	0.109	0.336
	0.3	0.059	0.200	0.125	0.383
	0.4	0.069	0.234	0.146	0.449
	0.5	0.073	0.246	0.153	0.472
	0.6	0.069	0.234	0.146	0.449
	0.7	0.059	0.200	0.125	0.383
	0.75	0.052	0.175	0.109	0.336
	0.8	0.043	0.146	0.091	0.280
	0.9	0.023	0.077	0.048	0.148

① GIRDER SELF WEIGHT PLUS STIFFENERS.

② KNEE BRACES PLUS FLOOR BEAMS, BALLAST PAN AND WALKWAY PLATE.

③ WATERPROOFING PLUS BALLAST (TIES) AND TRACK RAILS.

STRESS TABLE SPANS 1 AND 2

DESIGN DATA FOR GIRDERS

LIVE LOAD: COOPER'S E80 WITH DIESEL IMPACT
ASSUMED DEAD LOAD PER LINEAR FOOT OF GIRDER

TRACK AND BALLAST	1.610 KLF
FLOOR	2.580 KLF
GIRDER	0.761 KLF
TOTAL DEAD LOAD	4.951 KLF

PROPERTIES OF GIRDERS

GROSS SECTION		NET SECTION	
A =	196.50 IN	A =	196.50 IN
Aw =	81.00 IN	Aw =	81.00 IN
I =	432,900 IN	I =	425,239 IN
Y =	57.0 IN	Y =	57.0 IN
S =	7628 IN	S =	7493 IN

MAXIMUM FORCES FOR GIRDER

	MAX SHEAR (KIP)	MAX MOMENT (K-FT)
DEAD LOAD	202.0	4,335
LIVE LOAD	287.0	5,345
IMPACT	129.0	2,410
TOTAL	618.0	12,090

MAXIMUM STRESSES FOR GIRDER

	SHEAR (KSI)	MOMENT (T FLG) (KSI)	MOMENT (B FLG) (KSI)
DEAD LOAD	2.50	6.82	6.94
L.LOAD + IMPACT	5.12	12.20	12.42
TOTAL (KSI)	7.62	19.02	19.61

DEFLECTIONS (GIRDERS)

DEAD LOAD = 0.472 IN
LIVE LOAD + IMPACT = 0.814 IN (ALLOWABLE = 1.608 IN)

MAXIMUM FORCES FOR FLOOR BEAMS

	MAX SHEAR (K)	MAX MOMENT (K-FT)
DEAD LOAD	8.28	57.74
LIVE LOAD	24.90	226.92
IMPACT	14.67	131.69
TOTAL	47.85	416.36

MAXIMUM STRESSES FOR FLOOR BEAMS

	MAX SHEAR (KSI)	MAX MOMENT (KSI)
DEAD LOAD	1.24	2.40
L.LOAD + IMPACT	5.92	14.89
TOTAL (KSI)	7.15	17.29

STATE OF TEXAS
JINGGANG CAO
88343
LICENSED
PROFESSIONAL ENGINEER

1-3-08

NO.	DATE	REVISION	APPROV.

PRESIDENT GEORGE BUSH TURNPIKE

NTTA
NORTH TEXAS TOLLWAY AUTHORITY

DART RAILROAD UNDERPASS
CAMBER DIAGRAM

Parsons Brinckerhoff Quade & Douglas, Inc.
2777 Stemmons Freeway
Suite 1133
Dallas, TX 75207

SECTION XXX

DRAWN CPS DATE 12-31-07 DESIGNED JGC DATE 12-31-07
CHECKED JE DATE 12-31-07 SCALE AS NOTED

CONTRACT NO. 02011-PGB-06-CN-EN SHEET 882

Plotted By bpragler
Plotted 03-JAN-2008 17:10
DGN=G:\JOBS\22474-PGBT\Sheets\Bridge\B30oBD02.dgn, ON=[0-63]

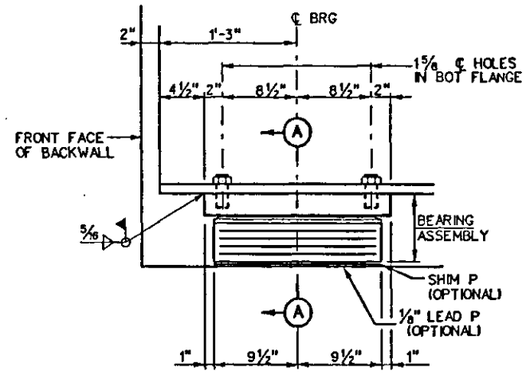

ELEVATION AT ABUTMENT
SCALE: ¾"=1'-0"

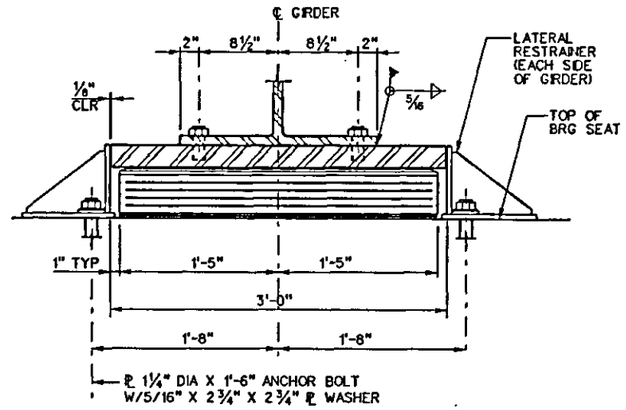

SECTION A-A
SCALE: ¾"=1'-0"

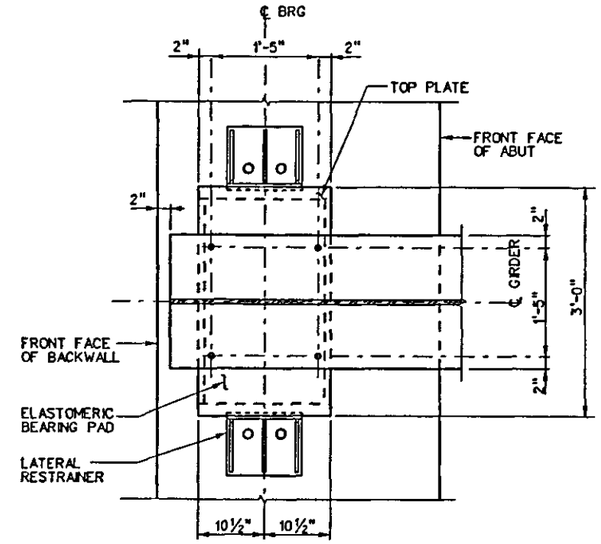

PLAN AT ABUTMENT
SCALE: ½"=1'-0"

GENERAL NOTES

1. ENTIRE BEARING ASSEMBLY (TO BE PAID FOR EACH, COMPLETE IN PLACE), SHALL INCLUDE TOP PLATE, STAINLESS STEEL SHEET, TFE SURFACE, ¾" BONDED STEEL PLATE, ELASTOMER PAD, LATERAL RESTRAINERS, AND ANCHOR BOLTS.
2. SHIM PLATE AND LEAD PLATE ARE OPTIONAL AND MAY BE UTILIZED TO COMPENSATE FOR CONSTRUCTION ERRORS IN BEARING SEATS. OPTIONAL PLATE ARE TO BE INCIDENTAL TO RELATED ITEMS.

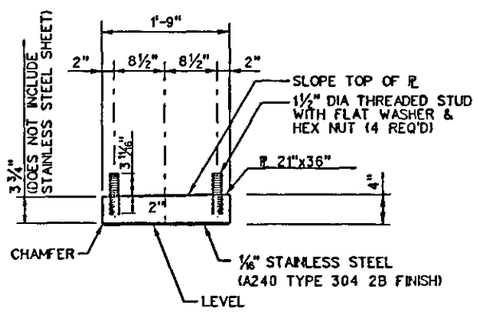

TOP BEARING ASSEMBLY
SCALE: ½"=1'-0"

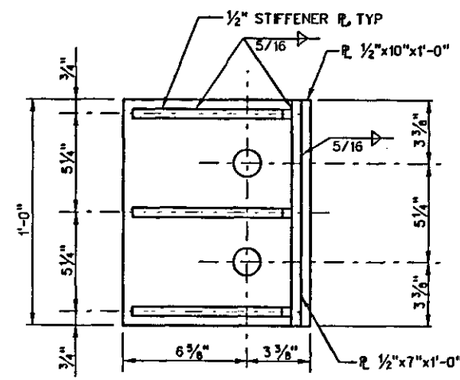

PLAN VIEW

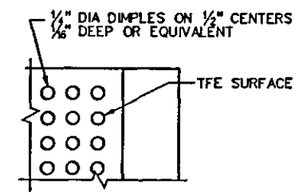

PLAN TEFLON SURFACE
NTS

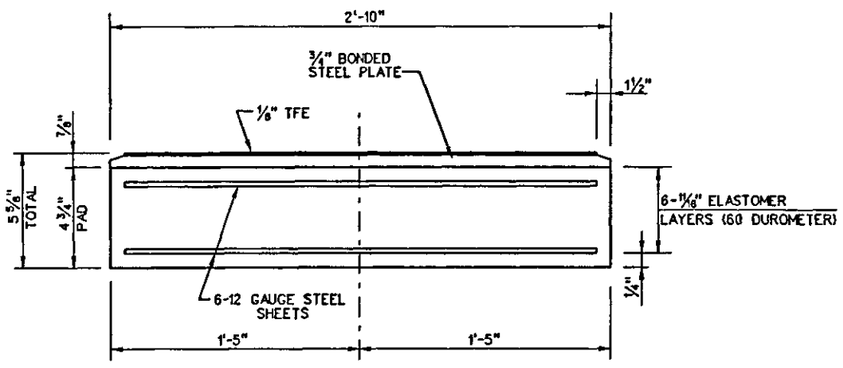

BOTTOM BEARING ASSEMBLY
NTS

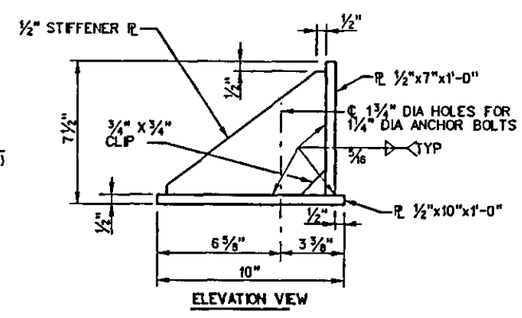

ELEVATION VIEW

LATERAL RESTRAINER DETAIL
SCALE: 1½"=1'-0"

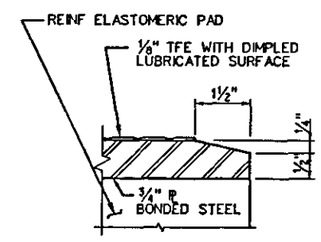

SECTION THRU TEFLON
NTS

NOTE: THE ⅛" TEFLON SHEET SHALL BE BONDED DIRECTLY TO THE ¾" BONDED STEEL PLATE WITH A TWO COMPONENT, MEDIUM VISCOSITY EPOXY RESIN, CONFORMING TO THE REQUIREMENTS OF THE FEDERAL SPECIFICATION MMM-A-134 TYPE 1. THE BOND AGENT SHALL BE APPLIED ON THE FULL AREA OF THE CONTACT SURFACES. BONDING OF ⅛" TEFLON SHEET DURING VULCANIZING PROCESS WILL BE PERMITTED PROVIDED THE PROCESS AND METHOD OF ADJUSTING ASSEMBLY HEIGHT IS APPROVED BY THE CONTRACTING OFFICER.

STATE OF TEXAS — JINGGANG CAO — 88543 — LICENSED — PROFESSIONAL ENGINEER

1-3-08

NO.	DATE	REVISION	APPROV.

PRESIDENT GEORGE BUSH TURNPIKE

NTTA
NORTH TEXAS TOLLWAY AUTHORITY

DART RAILROAD UNDERPASS
EXPANSION BEARING DETAILS
ABUTMENT NO. 1 & 3

Parsons Brinckerhoff Quade & Douglas, Inc.
2777 Stemmons Freeway
Suite 619
Dallas, TX 75207

SECTION XXX

DRAWN CPS	DATE 12-31-07	DESIGNED JGC	DATE 12-31-07
CHECKED JE	DATE 12-31-07	SCALE AS NOTED	

CONTRACT NO. 02011-PGB-06-CN-EN SHEET 883

Plotted By ‰raquer
Plotted 03-JAN-2008 17:10
DGN=G:\JOBS\22474-PGBT\Sheets\Bridge\B30aBD04.dgn, ON=[0-63]

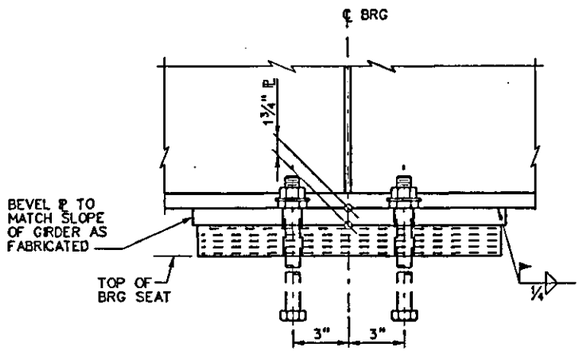

SECTION A-A (SIDE ELEVATION)
SCALE: 1½"=1'-0"

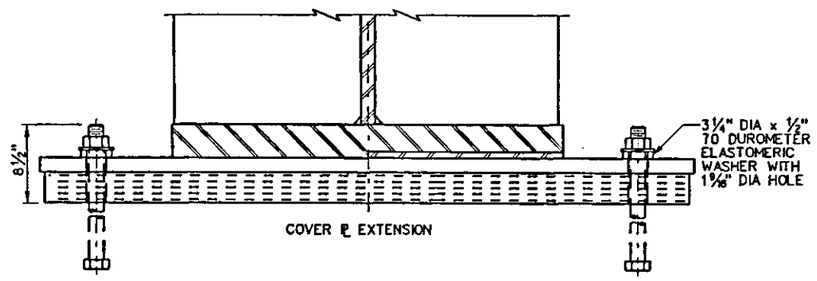

SECTION B-B (TRANSVERSE SECTION)
SCALE: 1½"=1'-0"

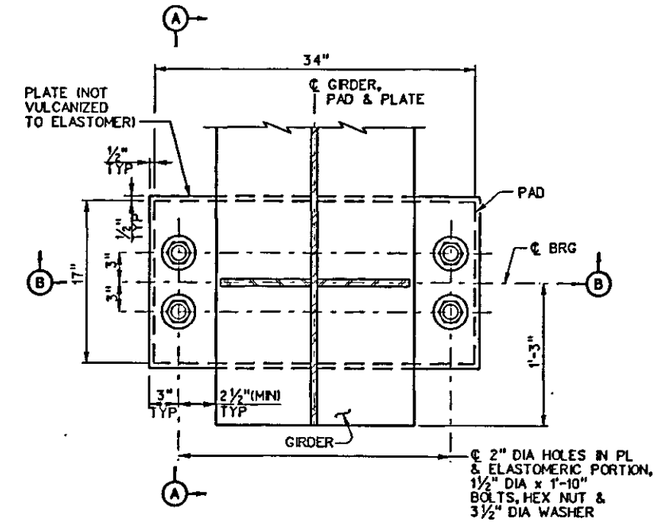

PLAN
SCALE: ¾"=1'-0"

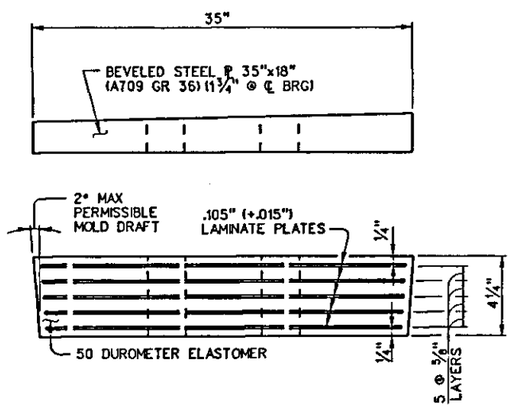

BEARING PAD DETAIL
NTS

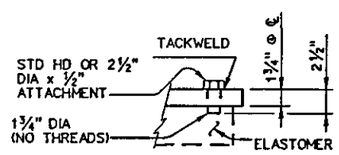

ANCHOR BOLT DETAIL
NTS

GENERAL NOTES

1. BEARINGS WILL BE MEASURED BY THE UNIT OF EACH "ELASTOMERIC BEARING" OR "SLIDING ELASTOMERIC BEARING" OF THE TYPE INDICATED, COMPLETE IN PLACE.
2. PAYMENT FOR BEARINGS WILL BE MADE AT THE UNIT PRICE BID FOR EACH TYPE OF "ELASTOMERIC BEARING" OR "SLIDING ELASTOMERIC BEARING", WHICH PRICE SHALL BE FULL COMPENSATION FOR FURNISHING AND INSTALLING EACH COMPLETE BEARING INCLUDING ANCHOR BOLTS, TOP PLATE, SLIDING SURFACES, ELASTOMERIC COMPONENTS, LATERAL GUIDES, SLEEVES AND WASHERS.
3. ANCHOR BOLTS, NUTS, WASHERS AND PIPE SLEEVES (IF USED) SHALL BE GALVANIZED.
4. BEVELED STEEL PLATES:
   FOR SHOP PLANS, ESTABLISH ONE EDGE OF BEVELED STEEL PLATES TO NEAREST ⅛" BASED ON REQUIRED THICKNESS AT CENTER OF BEARING AND THE SLOPE OF THE FABRICATED BEAMS. SLOPE FOR END BEARING PLATES SHALL BE ADJUSTED BY .01' PER FOOT SLOPE DOWNWARD TOWARD THE SPAN TO ALLOW FOR DEAD LOAD DEFLECTION. THICKNESS TOLERANCE VARIATION FROM THE SHOP PLANS IS PLUS OR MINUS ⅛", EXCEPT THAT THE VARIATION FROM A PLANE PARALLEL TO THE THEORETICAL TOP SURFACE CAN NOT EXCEED ⅛" TOTAL.

STATE OF TEXAS
JINGANG CAO
88343
LICENSED
PROFESSIONAL ENGINEER

1-3-08

NO.	DATE	REVISION	APPROV.

PRESIDENT GEORGE BUSH TURNPIKE

NTTA
NORTH TEXAS TOLLWAY AUTHORITY

DART RAILROAD UNDERPASS

FIXED BEARING DETAILS
BENT 2

Parsons Brinckerhoff Quade & Douglas, Inc.
2777 Stemmons Freeway
Suite 833
Dallas, TX 75207

SECTION XXX

DRAWN CPS DATE 12-31-07 DESIGNED JGC DATE 12-31-07
CHECKED JE DATE 12-31-07 SCALE AS NOTED

CONTRACT NO. 02011-PGB-06-CN-EN SHEET 884

Plotted 03-JAN-2008 17:10

Plotted by qproquer
Plotted 03-JAN-2008 17:10
DGN-G:\JOBS\22474-PGBT\Sheets\Bridge\B30aB003.dgn, ON=(0-633)

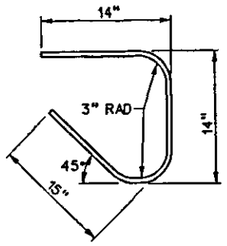

DETAIL 1
NTS

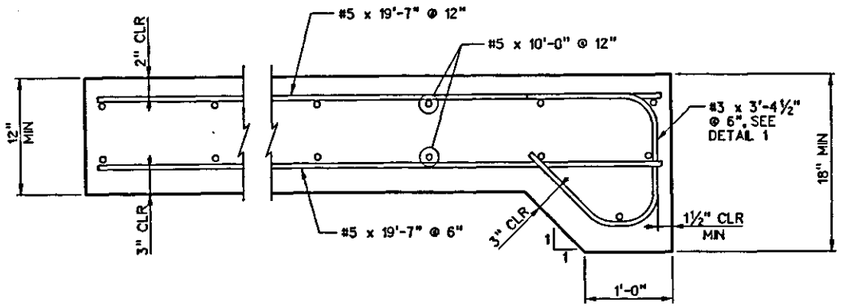

REINFORCING ELEVATION
NTS

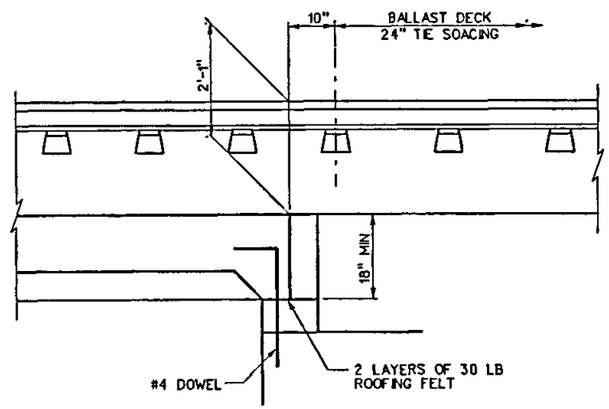

TRANSITION BETWEEN BALLASTED TRACK AND BALLAST DECK AERIAL STRUCTURE
SCALE: 3/8" = 1'-0"

GENERAL NOTES

1. ALL CAST-IN-PLACE CONCRETE SHALL BE CLASS "S", WITH MINIMUM COMPRESSIVE STRENGTH f'c = 4000 PSI.
2. ALL REINFORCING STEEL SHALL BE EPOXY COATED AND CONFORM TO ASTM A-615, GRADE 60.
3. CHAMFER ALL EXPOSED CORNERS 3/4" UNLESS OTHERWISE SHOWN OR NOTED.
4. ALL REINFORCING STEEL SHALL HAVE 2" CLEAR COVER UNLESS OTHERWISE SHOWN OR NOTED.
5. BAR LAPS, WHERE REQUIRED SHALL BE AS FOLLOWS:
   EPOXY COATED
   #4 BARS = 2'-1"
   #5 BARS = 2'-7"

STATE OF TEXAS
JINGGANG CAO
88343
LICENSED
PROFESSIONAL ENGINEER
1-3-08

NO.	DATE	REVISION	APPROV.

PRESIDENT GEORGE BUSH TURNPIKE

NTTA
NORTH TEXAS TOLLWAY AUTHORITY

DART RAILROAD UNDERPASS
APPROACH SLAB DETAILS

Parsons Brinckerhoff Quade & Douglas, Inc.
2777 Stemmons Freeway
Suite 813
Dallas, TX 75207

SECTION XXX

DRAWN CPS DATE 12-31-07 DESIGNED JGC DATE 12-31-07
CHECKED JE DATE 12-31-07 SCALE AS NOTED

CONTRACT NO. 02011-PGB-06-CN-EN SHEET 885

Plotted 03-JAN-2008 17:10

Plotted By sprdguer
Plotted 03-JAN-2008 17:10
DGN=G:\JOBS\22474-PGBT\Sheets\Bridge\B30aBD08.dgn, ON=(0-63)

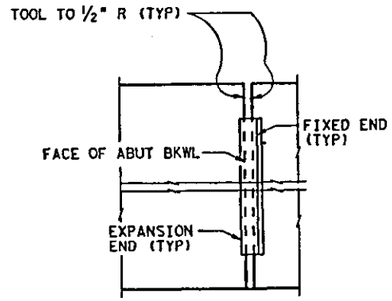

PLANS OF ARMOR JOINT PLATES

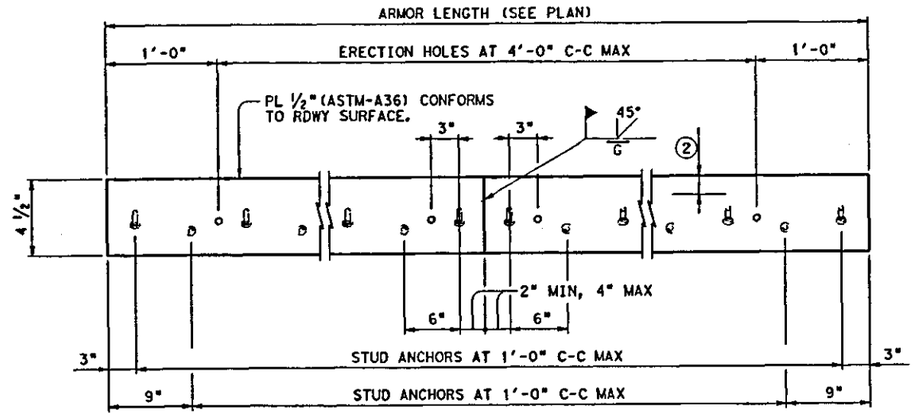

ELEVATION OF BASIC ARMOR PLATE

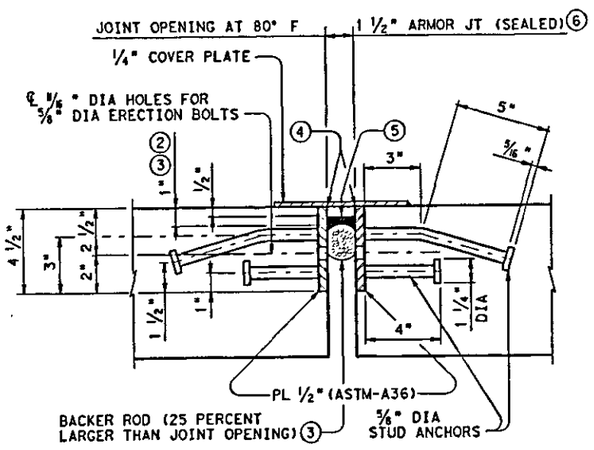

ARMOR JOINT SECTIONS

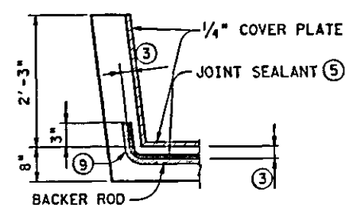

JOINT SEALANT TERMINATION DETAILS

ARMOR PLATE IS NOT SHOWN FOR CLARITY.

2 DO NOT PAINT TOP 1 1/2" OF PLATE FOR SEALED ARMOR JOINT.

3 SET TOP OF BACKER ROD 1" BELOW TOP OF ARMOR PLATE. BACKER ROD MUST BE COMPATIBLE WITH JOINT SEALANT. USE OF MULTIPLE PIECES TO CREATE A BACKER ROD CROSS SECTION IS NOT PERMITTED. TOP OF BACKER ROD MUST BE CONVEX AS SHOWN.

4 BLAST CLEAN ENTIRE CONTACT AREA BETWEEN SEALANT AND PLATE (SSPC-SP10) BEFORE INSTALLING SEALANT. LIGHT BRUSH BLAST AND THOROUGHLY CLEAN ALL DUST AND DEBRIS FROM CONCRETE SURFACES IN CONTACT WITH JOINT SEALANT BEFORE APPLICATION OF SILICONE SEAL.

5 USE CLASS 7 JOINT SEALANT THAT CONFORMS TO DMS-6310.

6 SEALANT WILL BE PLACED WHILE AMBIENT TEMPERATURE IS BETWEEN 55°F AND 80°F AND IS RISING.

9 FORM VERTICAL LEG OF SEAL AS PER THE MANUFACTURER'S RECOMMENDATIONS. USE CLASS 4 JOINT SEALANT IF CLASS 7 CANNOT BE INSTALLED CORRECTLY. INSTALL ACCORDING TO MANUFACTURER'S RECOMMENDATIONS.

GENERAL NOTES

1. PROVIDE ARMOR JOINTS AT LOCATIONS INDICATED ON THE BRIDGE LAYOUT.
2. THESE JOINT DETAILS ACCOMMODATE A JOINT MOVEMENT RANGE OF 1 3/8" (3/4" OPENING MOVEMENT AND 5/8" CLOSURE MOVEMENT).
3. SHIP ARMOR JOINTS IN CONVENIENT LENGTHS OF 10'-0" MIN AND 24'-0" MAX UNLESS NECESSARY FOR STAGE CONSTRUCTION OR WIDENINGS. ONE SHOP SPLICE IS PERMITTED IN EACH SHIPPING LENGTH PROVIDED NO PIECE IS LESS THAN 2'-0" LONG AND SUFFICIENT STUDS ARE ADDED TO LIMIT THE STUD TO SHOP SPLICE DISTANCE TO 2" MIN AND 4" MAX.
4. USE GROOVE WELDS FOR ALL SHOP AND FIELD BUTT SPLICES. GRIND SMOOTH AREAS IN CONTACT WITH SEAL. MAKE ALL NECESSARY FIELD SPLICE JOINT PREPARATIONS IN THE SHOP.
5. WELD STUDS IN ACCORDANCE WITH AWS D1.1. PUNCH ERECTION HOLES TO LINE UP IN FINAL POSITION OF ARMOR JOINT. MATCH MARK CORRESPONDING PLATE SECTIONS AND BOLT TOGETHER FOR SHIPMENT.
6. PAINT PORTIONS OF PLATE NOT IN CONTACT WITH CONCRETE WITH THE PRIMER SPECIFIED FOR SYSTEM II PAINT.
7. SECURE ARMOR JOINTS IN POSITION AND PLACE TO PROPER GRADE AND ALIGNMENT BY WELDING BRACES TO ADJACENT REINFORCING STEEL. COST OF FURNISHING AND INSTALLING TEMPORARY BRACING IS SUBSIDIARY TO THE PERTINENT BID ITEM.
8. AFTER BRACING AND WELDING ARMOR PLATES, REMOVE THE ERECTION BOLTS AND SPACERS AND SEAL THE ERECTION HOLES BEFORE PLACING SLAB CONCRETE.
9. AN ARMOR JOINT LAYOUT WHICH IDENTIFIES LOCATION OF EACH STEEL SECTION SHALL BE DEVELOPED BY THE FABRICATOR. PERMANENTLY MARK EACH STEEL SECTION IN ACCORDANCE WITH THE ARMOR JOINT LAYOUT. A COPY OF THE ARMOR JOINT LAYOUT IS TO BE PROVIDED TO THE ENGINEER.
10. PAYMENT FOR ARMOR JOINT WITH OR WTHOUT SEAL IS BASED ON LENGTH OF ARMOR PLATE.
11. WEIGHT P.L.F. FOR ONE ARMOR JOINT (2 PLATES) IS 17.80 LB.

STATE OF TEXAS JINGGANG CAO 88343 LICENSED PROFESSIONAL ENGINEER 1-3-08

NO.	DATE	REVISION	APPROV.

PRESIDENT GEORGE BUSH TURNPIKE

NTTA NORTH TEXAS TOLLWAY AUTHORITY

DART RAILROAD UNDERPASS

ARMOR JOINT DETAILS

Parsons Brinckerhoff Quade & Douglas, Inc. 2711 Stemmons Freeway Suite 833 Dallas, TX 75207

SECTION XXX

DRAWN CPS DATE 12-31-07 DESIGNED JGC DATE 12-31-07
CHECKED JE DATE 12-31-07 SCALE

CONTRACT NO. 02011-PGB-06-CN-EN SHEET 886

Plotted 03-JAN-2008 17:10

Plotted By: apr6guer
Plotted 03-JAN-2008 17:10
DGN=G:\JOBS\22474-PGBT\Sheets\Bridge\B30aBD08a.dgn, CN=CO-63

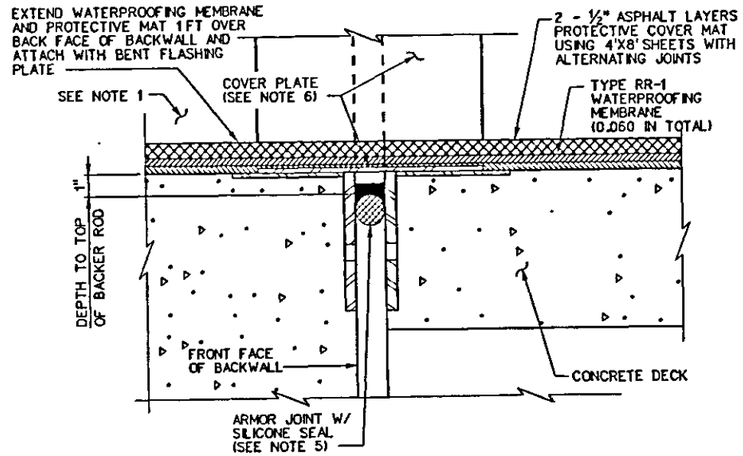

SECTION A-A

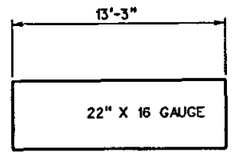

SHEET METAL COVER PLATE

GENERAL NOTES

1. WATERPROOFING DETAILS ON RETAINER CURBS ARE SIMILAR TO DECK.
2. TYPE RR-1 WATERPROOFING MEMBRANE SHALL BE APPLIED IN ACCORDANCE WITH ITEM 458 OF THE STANDARD SPECIFICATIONS.
3. ASPHALT PROTECTIVE COVER MAY SHALL BE APPLIED IN ACCORDANCE WITH ITEM 458 OF THE STANDARD SPECIFICATIONS.
4. JOINT SEAL SHALL BE INSTALLED IN ACCORDANCE WITH ITEM 430, "CLEANING AND/OR SEALING JOINTS AND CRACKS" AND MANUFACTURER'S RECOMMENDATIONS. PAYMENT FOR THIS WORK WILL BE SUBSIDIARY TO OTHER ITEMS OF WORK.
5. FOR SLAB AND WALL COVER PLATE DETAILS, SEE DRAWING "BNSF ARMOR JOINT WITH SILICONE SEAL". PAYMENT FOR THIS WORK WILL BE SUBSIDIARY TO OTHER ITEMS OF WORK.
6. FOR JOINT DETAILS, SEE DRAWING "BNSF ARMOR JOINT WITH SILICONE SEAL".
7. ALL BOLTS, WASHERS, COVER PLATES AND ARMOR PLATES SHALL BE GALVANIZED IN ACCORDANCE WITH ITEM 445, "GALVANIZING".
8. APRON PLATE AND SHEET METAL COVER PLATE WILL BE SUBSIDIARY TO OTHER ITEM OF WORK.

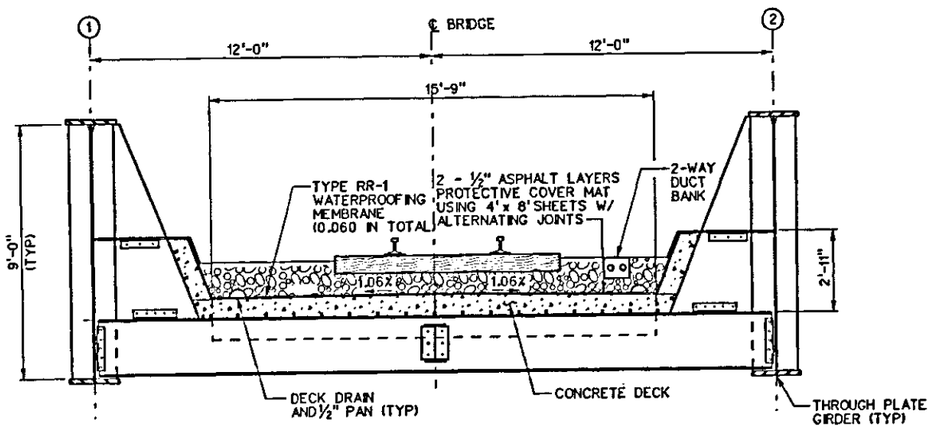

SECTION B-B

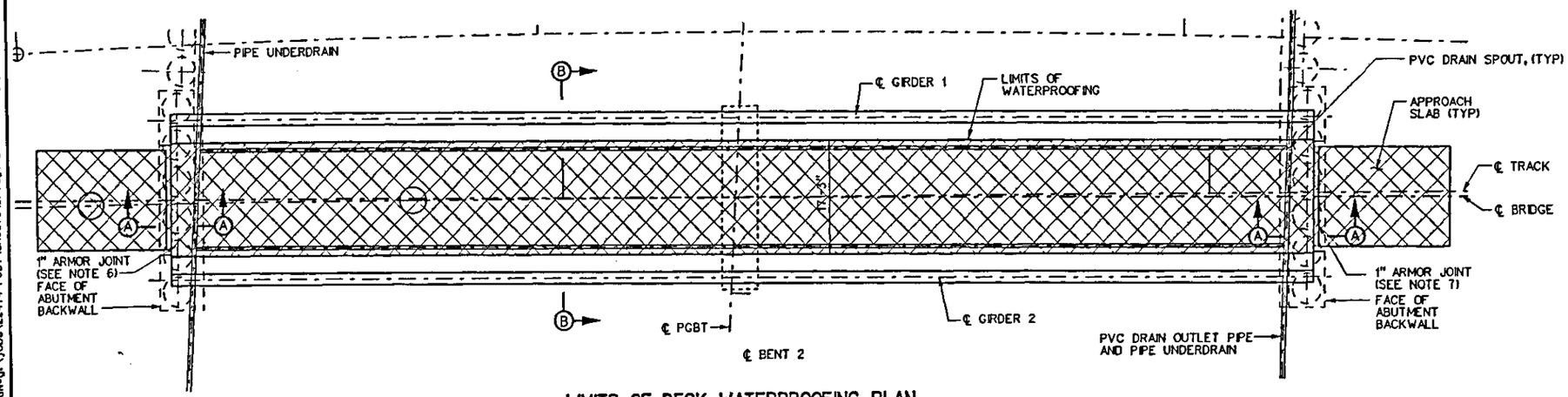

LIMITS OF DECK WATERPROOFING PLAN

STATE OF TEXAS
JINGGANG CAO
88343
LICENSED
PROFESSIONAL ENGINEER
1-3-08

NO.	DATE	REVISION	APPROV.

PRESIDENT GEORGE BUSH TURNPIKE

NTTA
NORTH TEXAS TOLLWAY AUTHORITY

DART RAILROAD UNDERPASS
MP 745.9

DECK WATERPROOFING DETAILS

Parsons Brinckerhoff Quade & Douglas, Inc.
2777 Stemmons Freeway
Suite 833
Dallas, TX 75207

SECTION XXX

DRAWN CPS DATE 12-31-07
CHECKED JE DATE 12-31-07
DESIGNED JGC DATE 12-31-07
SCALE

CONTRACT NO. 02011-PGB-06-CN-EN SHEET 887

Plotted 03-JAN-2008 17:10

Plotted By sprague
Plotted 03-JAN-2008 17:10
DGN=gt\Jobs\22474-PGBT\Sheets\Bridge\B30aB009.dgn, ON=[0-4, 7-10, 20, 29, 31, 46, 50, 57, 59, 602]

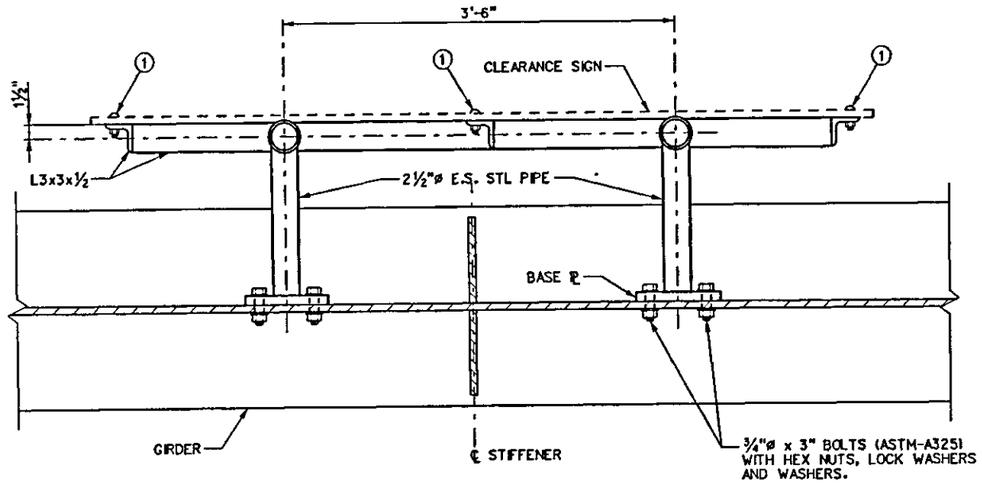

PLAN

SCALE: ¾" = 1'-0"

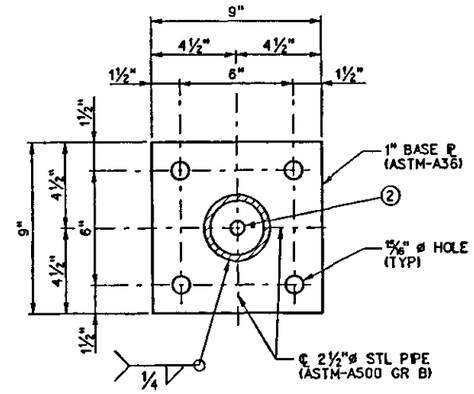

BASE PLATE DETAIL

SCALE: 1½" = 1'-0"

① ℄ ⅝" DIA x 2" HEXAGON SOCKET BUTTON HEAD CAP SCREWS (ASTM A574) W/HEX NUTS. ATTACH HEX NUTS TO L3x3x½ BY TACK WELDING IN TWO PLACES. THREADS SHALL HAVE CLASS 3A FIT TOLERANCE IN ACCORDANCE ASME B1.1. SIX SCREWS REQUIRED.

② HOLE REQUIRED TO DRAIN ZINC FROM BASE PLATE DURING GALVANIZING.

E.S. = EXTRA STRONG

NOTES:

1. THIS DRAWING PROVIDES DETAILS TO MOUNT A VERTICAL CLEARANCE SIGN (W12-2P) (84" x 24") TO RAILROAD BRIDGE.
2. THE VERTICAL FACE OF CLEARANCE SIGN WILL BE PLUMB UNLESS OTHERWISE APPROVED BY ENGINEER.
3. ALL STEEL COMPONENTS SHALL BE GALVANIZED AFTER FABRICATION UNLESS OTHERWISE NOTED.
4. THE ENGINEER WILL FURNISH THE CLEARANCE TO BE SHOWN ON THE SIGN.
5. SEE GIRDER 1 AND 2 FOR SIGN LOCATION.
6. COST OF FURNISHING, INSTALLING, RELOCATING OR REMOVING A CLEARANCE SIGN WILL BE INCLUDED IN UNIT PRICE BID FOR "ALUMINUM SIGNS (TYPE A)". ONE SIGN BLANK (W12-2P)(84" x 24") IS 14 SF.
7. COMPONENTS SHOWN WILL BE PAID FOR AT THE UNIT PRICE BID FOR "STRUCTURAL STEEL (MISC)". AVERAGE STEEL WEIGHT IS 104 LB.
8. ALL WELDS ARE ¼" SIZE UNLESS OTHERWISE NOTED.

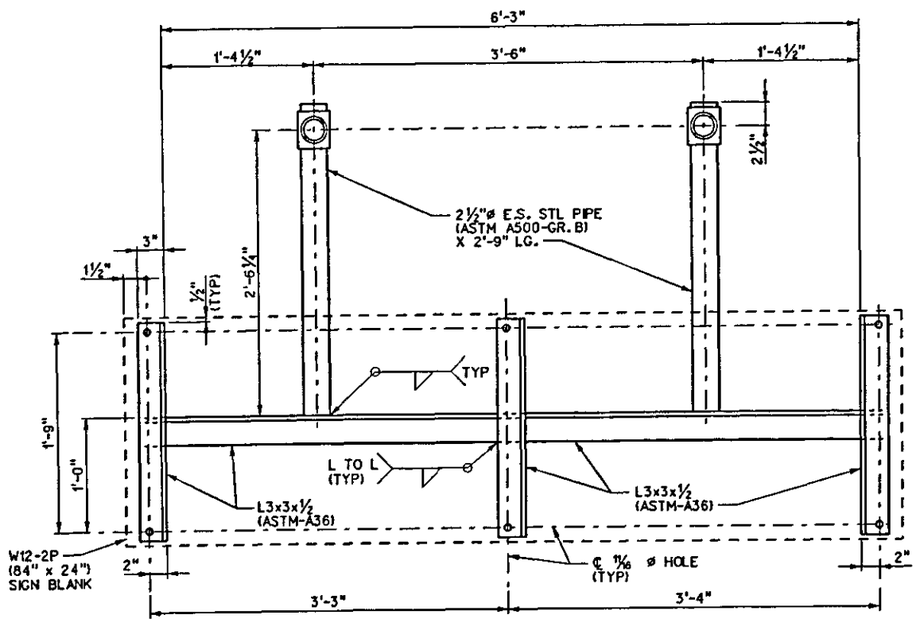

VIEW A-A

SCALE: ¾" = 1'-0"

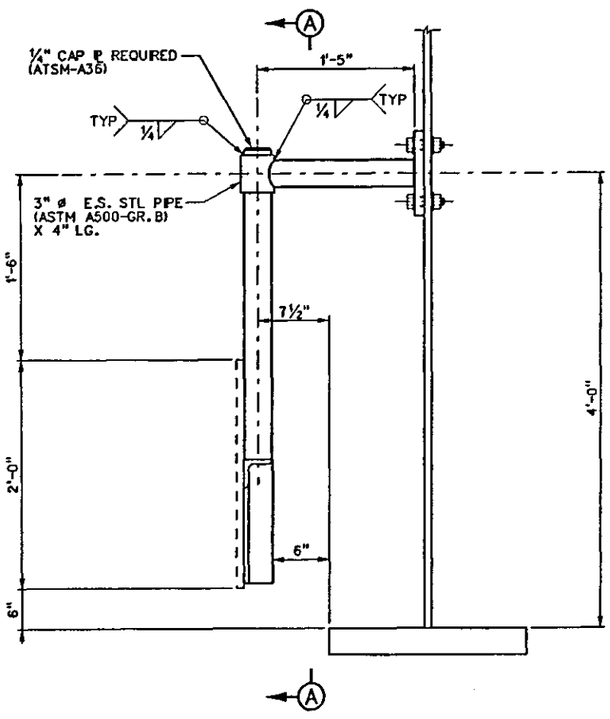

SECTION AT BRIDGE CONNECTION

SCALE: ¾" = 1'-0"

STATE OF TEXAS
OSAMA A. SHAHAWY
88476
LICENSED
PROFESSIONAL ENGINEER

1/3/08

NO.	DATE	REVISION	APPROV.

PRESIDENT GEORGE BUSH TURNPIKE

NTTA
NORTH TEXAS TOLLWAY AUTHORITY

DART RAILROAD UNDERPASS

RAILROAD BRIDGE CLEARANCE SIGN ASSEMBLY

Parsons Brinckerhoff Quade & Douglas, Inc.
2777 Stemmons Freeway
Suite 1633
Dallas, TX 75207

SECTION XXX

DRAWN CPS	DATE 12-31-07	DESIGNED OAS	DATE 12-31-07
CHECKED OAS	DATE 12-31-07	SCALE AS NOTED	

CONTRACT NO. 02011-PGB-06-CN-EN SHEET 888

Plotted 03-JAN-2008 21:29

Plotted By aulintanad
Plotted By aulintanad
Plotted 03-JAN-2008 21:29
DGN=gi:\Jobs\22474-PGBT\Sheets\Bridge\B30aBD10.dgn, ON=(1-64)

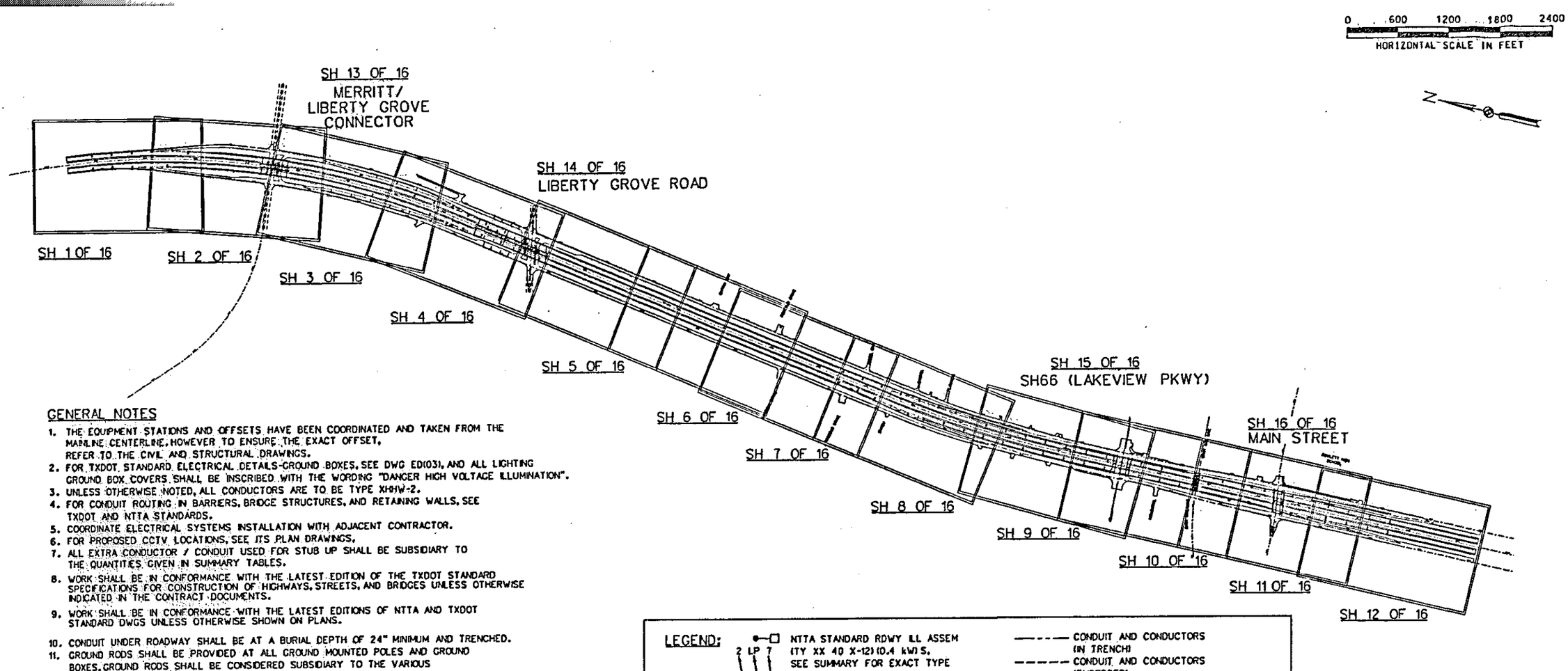

GENERAL NOTES

1. THE EQUIPMENT STATIONS AND OFFSETS HAVE BEEN COORDINATED AND TAKEN FROM THE MAINLINE CENTERLINE. HOWEVER TO ENSURE THE EXACT OFFSET, REFER TO THE CIVIL AND STRUCTURAL DRAWINGS.
2. FOR TXDOT STANDARD ELECTRICAL DETAILS-GROUND BOXES, SEE DWG ED(03), AND ALL LIGHTING GROUND BOX COVERS SHALL BE INSCRIBED WITH THE WORDING "DANGER HIGH VOLTAGE ILLUMINATION".
3. UNLESS OTHERWISE NOTED, ALL CONDUCTORS ARE TO BE TYPE XHHW-2.
4. FOR CONDUIT ROUTING IN BARRIERS, BRIDGE STRUCTURES, AND RETAINING WALLS, SEE TXDOT AND NTTA STANDARDS.
5. COORDINATE ELECTRICAL SYSTEMS INSTALLATION WITH ADJACENT CONTRACTOR.
6. FOR PROPOSED CCTV LOCATIONS, SEE ITS PLAN DRAWINGS.
7. ALL EXTRA CONDUCTOR / CONDUIT USED FOR STUB UP SHALL BE SUBSIDIARY TO THE QUANTITIES GIVEN IN SUMMARY TABLES.
8. WORK SHALL BE IN CONFORMANCE WITH THE LATEST EDITION OF THE TXDOT STANDARD SPECIFICATIONS FOR CONSTRUCTION OF HIGHWAYS, STREETS, AND BRIDGES UNLESS OTHERWISE INDICATED IN THE CONTRACT DOCUMENTS.
9. WORK SHALL BE IN CONFORMANCE WITH THE LATEST EDITIONS OF NTTA AND TXDOT STANDARD DWGS UNLESS OTHERWISE SHOWN ON PLANS.
10. CONDUIT UNDER ROADWAY SHALL BE AT A BURIAL DEPTH OF 24" MINIMUM AND TRENCHED.
11. GROUND RODS SHALL BE PROVIDED AT ALL GROUND MOUNTED POLES AND GROUND BOXES. GROUND RODS SHALL BE CONSIDERED SUBSIDIARY TO THE VARIOUS BID ITEMS OF THE CONTRACT.
12. JUNCTION BOX, ABOVE GRADE, SHALL BE CONSIDERED SUBSIDIARY TO THE VARIOUS BID ITEMS OF THE CONTRACT. REFER TO TXDOT AND NTTA STANDARDS FOR ADDITIONAL MOUNTING REQUIREMENTS.
13. ROADWAY ILLUMINATION ASSEMBLY FOUNDATIONS SHALL BE IN ACCORDANCE WITH NTTA STANDARDS.
14. ALL ELECTRICAL COMPONENTS ARE SHOWN DIAGRAMMATICALLY FOR CLARITY. UNLESS SPECIFICALLY NOTED, ALL COMPONENTS ARE TO BE MOUNTED ADJACENT TO THE ROADWAY. SPECIFICALLY, NO JUNCTION BOXES WILL BE MOUNTED IN OR ON THE FINISHED ROADWAY. CONDUITS WITHIN TRENCH SHALL BE SPACED ACCORDING TO NTTA STANDARDS.
15. CONTRACTOR SHALL INSTALL/CONSTRUCT DRILL SHAFTS FOR ILLUMINATION POLES THAT ARE WITHIN THE MSE STRAP ZONE PRIOR TO INSTALLING THE MSE STRAPS. IT SHALL BE THE RESPONSIBILITY OF THE CONTRACTOR TO DETERMINE THE STRAP ZONE LIMIT.

LEGEND:

- 2 LP 7 — NTTA STANDARD RDWY ILL ASSEM (TY XX 40 X-12) (0.4 kW) S, SEE SUMMARY FOR EXACT TYPE
  - LABELS:
  - ASSEM FROM CABINET
  - ELEC SERVICE CABINET
  - CIRCUIT NUMBER
- 3 MR 8 — NTTA STANDARD RDWY ILL ASSEM (TY XX 40 X-8) (0.25 kW) S, SEE SUMMARY FOR EXACT TYPE
  - LABELS:
  - ASSEM FROM CABINET
  - ELEC SERVICE CABINET
  - CIRCUIT NUMBER
- FUTURE LIGHT POLE LOCATION PROVIDE JUNCTION BOX, POLE MOUNTING ANCHORS AND STUB-UP PER NTTA STANDARD DRAWINGS
- 1 LPL 10 — TXDOT STANDARD RDWY ILL ASSEM (TY XX 40 X-8) (0.25 kW) S, SEE SUMMARY FOR EXACT TYPE
  - LABELS:
  - ASSEM FROM CABINET
  - ELEC SERVICE ENCLOSURE
  - CIRCUIT NUMBER
- △ TXDOT STANDARD RDWY ILL ASSEM (U/P)
- ▲ NTTA STANDARD RDWY ILL ASSEM (U/P)
- CONDUIT AND CONDUCTORS (IN TRENCH)
- CONDUIT AND CONDUCTORS (EMBEDDED)
- CONDUIT AND CONDUCTORS EXPOSED (GALVANIZED RIGID METAL)
- 4" CONDUIT SLEEVE WITH A 2" CONDUIT AND CONDUCTORS (UNDER ROADWAY) (SEE NOTE 10)
- (X-XX) CONDUIT RUN NUMBER
- 30-AMP FUSED DISCONNECT SWITCH, SUBSIDIARY TO VARIOUS ITEMS
- JUNCTION BOX, ABOVE GRADE (SEE NOTE 12)
- GROUND BOX, BELOW GRADE
- ELECTRICAL SERVICE CENTER (ESC) / SERVICE ENTRANCE (S/E)
- PROPOSED ELECTRIC SERVICE

STATE OF TEXAS — PAUL J. LUTKEVICH — 84793 — REGISTERED PROFESSIONAL ENGINEER
1-2-08

NO.	DATE	REVISION	APPROV.

PRESIDENT GEORGE BUSH TURNPIKE

NTTA
NORTH TEXAS TOLLWAY AUTHORITY

ILLUMINATION KEY PLAN

Parsons Brinckerhoff Quade & Douglas, Inc.
2777 Stemmons Freeway
Suite 833
Dallas, TX 75207

SECTION XXX

DRAWN KWM DATE 1-04-08 DESIGNED SGB DATE 1-04-08
CHECKED MAZ DATE 1-04-08 SCALE NTS

CONTRACT NO. 02011-PGB-06-CN-EN SHEET 9 of 5

$USERS
$SYTIME$
DGNSPECELEV$
$sytime$

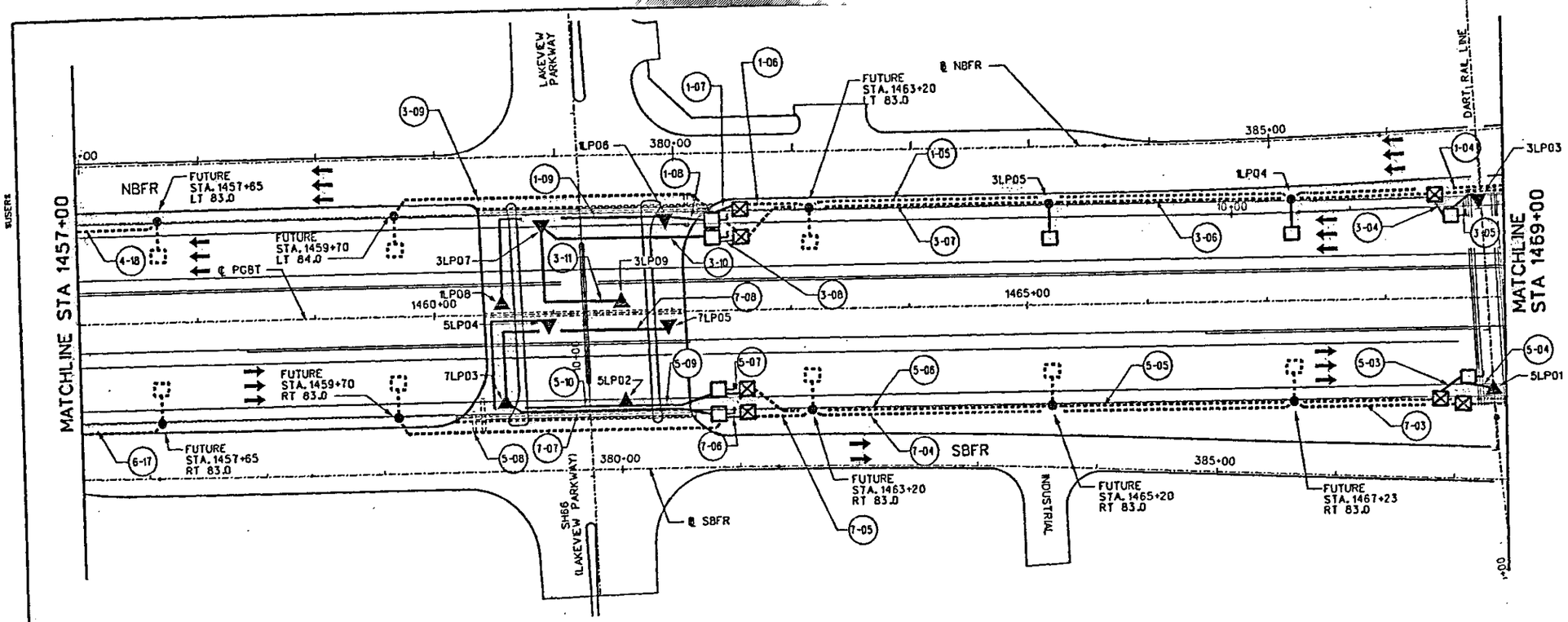

0 50 100 150 200
HORIZONTAL SCALE IN FEET

NOTES:
1. FOR LEGEND AND GENERAL NOTES, SEE ILLUMINATION KEYPLAN.

CONDUIT AND CONDUCTOR PLANS (THIS SHEET ONLY)

PLAN	GROUND LENGTH (FEET) #8 XHHW-2	GROUND LENGTH (FEET) #4 XHHW-2	CONDUCTOR NO. AND LENGTH (FEET) #8 XHHW-2	CONDUCTOR NO. AND LENGTH (FEET) #4 XHHW-2	CONDUIT (FEET) 2" PVC SCHD 40	CONDUIT (FEET) 4" PVC SCHD40	CONDUIT (FEET) 1" RMC	CONDUIT (FEET) 2" RMC
1-04		185		2-185				185
1-05		410		2-410				410
1-06		60		2-60				60
1-07	35		2-35				35	
1-08	35		2-35				35	
1-09	150		2-150				150	
3-04		50		2-50			50	
3-05		20		2-20			20	
3-06		385		2-385				385
3-07		260		2-260				260
3-08	35		2-35				35	
3-09		310		2-310				310
3-10	135		2-35				135	
3-11	110		2-110				110	
4-18		85		2-85				85
5-03		50		2-50			50	
5-04		20		2-20			20	
5-05		395		2-395	60			335
5-06		260		2-260				260
5-07	35		2-35				35	
5-08		310		2-310				310
5-09	85		2-85				85	
5-10	110		2-110				110	
6-17		85		2-85				85
7-03		195		2-195	60			135
7-04		410		2-410				410
7-05		60		2-60				60
7-06	35		2-35				35	
7-07	60		2-60				60	
7-08	210		2-210				210	

ELECTRICAL SERVICE SUMMARY (THIS SHEET ONLY)

SERVICE POLE NO.	SHEET NO.	SERVICE POLE DESCRIPTION (SEE ED(4)-03)	SERVICE CONDUIT SIZE	SERVICE CONDUCTORS NO./SIZE	SAFETY SWITCH AMPS.	MAIN DISCONNECT SWITCH AMP./ FUSE	MAIN DISCONNECT CKT. BKR POLE/AMP.	THREE-POLE CONDUCTOR AMPS.	PANEL BD./ LOADCENTER AND RATING (MIN)	CIRCUIT NO.	BRANCH CKT. BKR POLE/AMP.	kVA LOAD
		NOT USED										

ROADWAY ILLUMINATION ASSEMBLY SUMMARY (THIS SHEET ONLY)

POLE	OFFSET	STA.	TYPE	REMARKS
1LP04	LT 84.0	1467+23	(TY SP) 40S-12 (.4kW) S	RAIL MOUNTED
3LP05	LT 83.0	1465+20	(TY SP) 40S-12 (.4kW) S	RAIL MOUNTED
1LP06	LT 83.0	1461+90	(TY IBM) (.15kW) S	UNDERPASS MOUNTED
3LP07	LT 83.0	1460+90	(TY IBM) (.15kW) S	UNDERPASS MOUNTED
1LP08	LT 2.0	1460+60	(TY BM) (.15kW) S	UNDERPASS MOUNTED
3LP09	LT 2.0	1461+60	(TY BM) (.15kW) S	UNDERPASS MOUNTED
5LP02	RT 82.0	1461+60	(TY IBM) (.15kW) S	UNDERPASS MOUNTED
7LP03	RT 82.0	1460+60	(TY IBM) (.15kW) S	UNDERPASS MOUNTED
5LP04	RT 2.0	1460+60	(TY BM) (.15kW) S	UNDERPASS MOUNTED
7LP05	RT 2.0	1461+60	(TY BM) (.15kW) S	UNDERPASS MOUNTED
3LP03	LT 83.0	1468+75	(TY IBM) (.15kW) S	UNDERPASS MOUNTED
5LP01	RT 84.0	1468+85	(TY IBM) (.15kW) S	UNDERPASS MOUNTED

SHEET SUMMARY (THIS SHEET ONLY)

ITEM	DESC	DESCRIPTION	UNIT	ESTIMATE QUANTITY
610	7007	INS RD IL AM (TY AL) 40T-12 (.4 kW) S	EA	
610	7008	INS RD IL AM (TY SP) 40S-12 (.4 kW) S	EA	2
610	2007	INS RD IL AM (TY AL) 40T-8 (.25 kW) S	EA	
610	7017	INS RD IL AM (TY SP) 40S-8 (.25 kW) S	EA	
610	2060	INS RD IL AM (U/P) (TY BM)(.15 kW) S	EA	4
610	2060	INS RD IL AM (U/P) (TY IBM)(.15 kW) S	EA	6
610	2050	INS RD IL AM (TY ST) 40S-10 (.25 kW) S	EA	
618	2045	CONDT (RM)(1")	LF	1175
618	2052	CONDT (RM)(2")	LF	3290
618	2018	CONDT (PVC)(SCHD 40)(2")	LF	120
618	2025	CONDT (PVC)(SCHD 40)(4")(BORE)	LF	
620	2014	ELEC CONDR (NO.10) INSULATED	LF	
620	2012	ELEC CONDR (NO.8) INSULATED	LF	
620	2010	ELEC CONDR (NO.6) INSULATED	LF	3525
620	2008	ELEC CONDR (NO.4) INSULATED	LF	10785
624	2014	GROUND BOX TY D (162922) W/APRON	EA	
628	7010	ELC SRV TY S (480) 400A (SS) PS (U)	EA	
628	7012	ELC SRV TY S/E (480) 400A (SS) PS (U)	EA	
416	2029	DRILL SHAFT (RDWY ILL POLE) (30 IN)	LF	

STATE OF TEXAS
PAUL A. LUTKEVICH
89793
REGISTERED PROFESSIONAL ENGINEER
1-2-08

NO.	DATE	REVISION	APPROV.

PRESIDENT GEORGE BUSH TURNPIKE

NTTA
NORTH TEXAS TOLLWAY AUTHORITY

ILLUMINATION LAYOUT

STA 1457+00 TO 1469+00

Parsons Brinckerhoff Quade & Douglas, Inc.
2777 Stemmons Freeway
Suite 1033
Dallas, TX 75207

SECTION XXX

DRAWN KWM DATE 1-04-08 DESIGNED SGB DATE 1-04-08
CHECKED MAZ DATE 1-04-08 SCALE 1"=100'

CONTRACT NO. D2011-PGB-06-CN-EN SHEET 98 OF

SHEET 10 OF 16

$SYTIME$
DGNSPECSLEV$

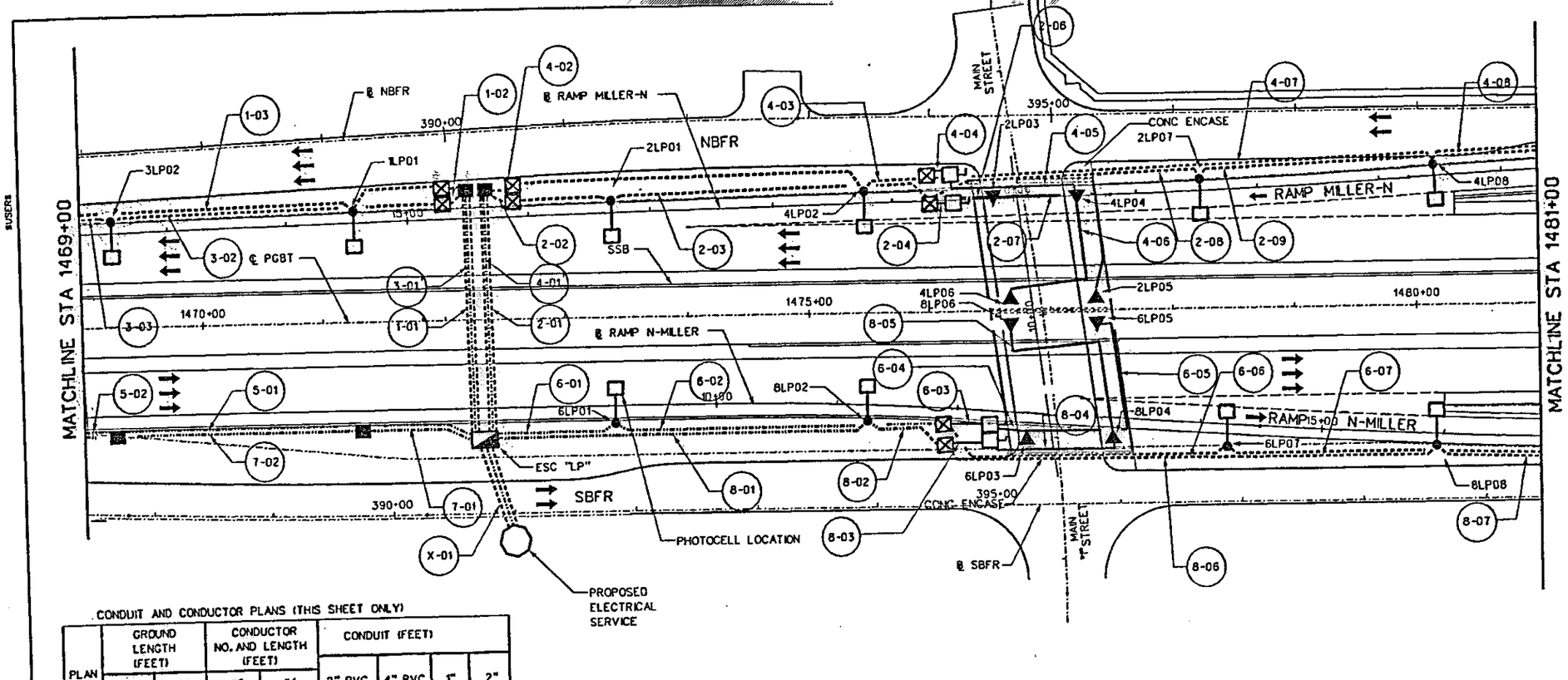

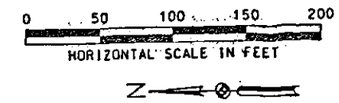

NOTES:

1. FOR LEGEND AND GENERAL NOTES, SEE ILLUMINATION KEYPLAN.
2. SEE NTTA STANDARD DRAWINGS FOR ESC LAYOUT AND DETAILS.

CONDUIT AND CONDUCTOR PLANS (THIS SHEET ONLY)

PLAN	GROUND LENGTH (FEET) #8 XHHW-2	GROUND LENGTH (FEET) #4 XHHW-2	CONDUCTOR NO. AND LENGTH (FEET) #8 XHHW-2	CONDUCTOR NO. AND LENGTH (FEET) #4 XHHW-2	CONDUIT (FEET) 2" PVC SCHD 40	CONDUIT (FEET) 4" PVC SCHD40	CONDUIT (FEET) 1" RMC	CONDUIT (FEET) 2" RMC
1-01		210		2-210	210	210		
1-02		110		2-110				110
1-03		235		2-235				235
2-01		210		2-210	210	210		
2-02		110		2-110				110
2-03		260		2-260				260
2-04	35		2-35				35	
2-06	35		2-35				35	
2-07	110		2-110				110	
2-08		235		2-235				235
2-09		285		2-285				285
3-01		210		2-210	210	210		
3-02		310		2-310				310
3-03		35		2-35				35
4-01		210		2-210	210	210		
4-02		335		2-335				335
4-03		60		2-60				60
4-04	85		2-85				85	
4-05	110		2-110				110	
4-06		110		2-110				110
4-07		410		2-410				410
4-08		410		2-410				410
5-01		310		2-310	310			
5-02		35		2-35	35			
6-01		110		2-110	110			
6-02		310		2-310	310			
6-03	35		2-35				35	
6-04	35		2-35				35	
6-05	110		2-110				110	
6-06		210		2-200	110			110
6-07		260		2-260				260
7-01		110		2-110	110			
7-02		235		2-233	235			
8-01		310		2-310	310			
8-02		110		2-110	110			
8-03	35		2-35				35	
8-04	120		2-120				120	
8-05	210		2-210				210	
8-06		410		2-410	210			210
8-07		85		2-85				85
X-01					2-150			

ELECTRICAL SERVICE SUMMARY (THIS SHEET ONLY)

SERVICE POLE NO.	SHEET NO.	SERVICE POLE DESCRIPTION (SEE ED(4)-03)	SERVICE CONDUIT SIZE	SERVICE CONDUCTORS NO./SIZE	SAFETY SWITCH AMPS.	MAIN DISCONNECT SWITCH AMP/FUSE	MAIN DISCONNECT CKT. BKR POLE/AMP.	THREE-POLE CONDUCTOR AMPS.	PANEL BD/LOADCENTER AND RATING (MIN)	CIRCUIT NO.	BRANCH CKT. BKR POLE/AMP.	kVA LOAD
3	11 OF 16	TY S (480) 400A (SS) PS(U) (SEE NOTE 2)	3"	3#4/0,1#2	N/A	N/A	3/400	400	200A	LTG 1-8	8-2P/20A	9.0

ROADWAY ILLUMINATION ASSEMBLY SUMMARY (THIS SHEET ONLY)

POLE	OFFSET	STA.	TYPE	REMARKS
6LP01	RT 86.0	1473+40	(TY AL) 40T-12 (.4kW)S	GROUND MOUNTED
8LP02	RT 88.0	1475+50	(TY AL) 40T-12 (.4kW)S	GROUND MOUNTED
1LP01	LT 90.0	1471+27	(TY SP) 40S-12 (.4kW)S	RAIL MOUNTED
3LP02	LT 86.0	1469+25	(TY SP) 40S-12 (.4kW)S	RAIL MOUNTED
2LP01	LT 94.0	1473+40	(TY SP) 40S-12 (.4kW)S	RAIL MOUNTED
4LP02	LT 98.0	1475+50	(TY SP) 40S-12 (.4kW)S	RAIL MOUNTED
6LP07	RT 113.0	1478+45	(TY SP) 40S-12 (.4kW)S	RAIL MOUNTED
8LP08	RT 114.0	1480+15	(TY SP) 40S-12 (.4kW)S	RAIL MOUNTED
2LP07	LT 104.0	1478+25	(TY SP) 40S-12 (.4kW)S	RAIL MOUNTED
4LP08	LT 113.0	1480+15	(TY SP) 40S-12 (.4kW)S	RAIL MOUNTED
2LP03	LT 102.0	1476+54	(TY BM) (.15kW)S	UNDERPASS MOUNTED
4LP04	LT 102.0	1477+23	(TY BM) (.15kW)S	UNDERPASS MOUNTED
6LP03	RT 114.0	1476+20	(TY BM) (.15kW)S	UNDERPASS MOUNTED
8LP04	RT 114.0	1477+50	(TY BM) (.15kW)S	UNDERPASS MOUNTED
6LP05	RT 2.0	1477+37	(TY BM) (.15kW)S	UNDERPASS MOUNTED
8LP06	RT 2.0	1476+67	(TY BM) (.15kW)S	UNDERPASS MOUNTED
2LP05	LT 2.0	1477+37	(TY BM) (.15kW)S	UNDERPASS MOUNTED
4LP06	LT 2.0	1476+67	(TY BM) (.15kW)S	UNDERPASS MOUNTED

SHEET SUMMARY (THIS SHEET ONLY)

ITEM	DESC	DESCRIPTION	UNIT	ESTIMATE QUANTITY
610	7007	INS RD L AM (TY AL) 40T-12 (.4 kW) S	EA	2
610	7008	INS RD L AM (TY SP) 40S-12 (.4 kW) S	EA	8
610	2007	INS RD L AM (TY AL) 40T-8 (.25 kW) S	EA	
610	7011	INS RD L AM (TY SP) 40S-8 (.25 kW) S	EA	
610	2060	INS RD L AM (U/P) (TY BM)(.15 kW) S	EA	4
610	2060	INS RD L AM (U/P) (TY IBM)(.15 kW) S	EA	4
610	2050	INS RD L AM (TY ST) 40S-10 (.25 kW) S	EA	
618	2045	CONDT (RM)(1")	LF	735
618	2052	CONDT (RM)(2")	LF	3160
618	2018	CONDT (PVC)(SCHD 40)(2")	LF	2990
618	2025	CONDT (PVC)(SCHD 40)(4")(BORE)	LF	840
620	2012	ELEC CONDR (NO.8) INSULATED	LF	3085
620	2010	ELEC CONDR (NO.6) INSULATED	LF	
620	2008	ELEC CONDR (NO.4) INSULATED	LF	16620
624	2014	GROUND BOX TY D (162922) W/APRON	EA	4
628	7010	ELC SRV TY S (480) 400A (SS) PS (U)	EA	1
628	7012	ELC SRV TY S/E (480) 400A (SS) PS (U)	EA	1
416	2029	DRILL SHAFT (RDWY ILL POLE) (30 IN)	LF	16

SHEET 11 OF 16

STATE OF TEXAS
PAUL J. LUTKEVICH
84793
REGISTERED PROFESSIONAL ENGINEER
1-2-08

NO.	DATE	REVISION	APPROV.

PRESIDENT GEORGE BUSH TURNPIKE

NTTA
NORTH TEXAS TOLLWAY AUTHORITY

ILLUMINATION LAYOUT

STA 1469+00 TO 1481+00

Parsons Brinckerhoff Quade & Douglas, Inc.
2777 Stemmons Freeway
Suite 1333
Dallas, TX 75207

SECTION XXX

DRAWN KWM DATE 1-04-08 DESIGNED SGB DATE 1-04-08
CHECKED MAZ DATE 1-04-08 SCALE 1"=100'

CONTRACT NO. 02011-PGB-06-CN-EN SHEET 985 OF ___

$SYTIME$
$DGNSPECBLEV$
$USER$
$sytime$

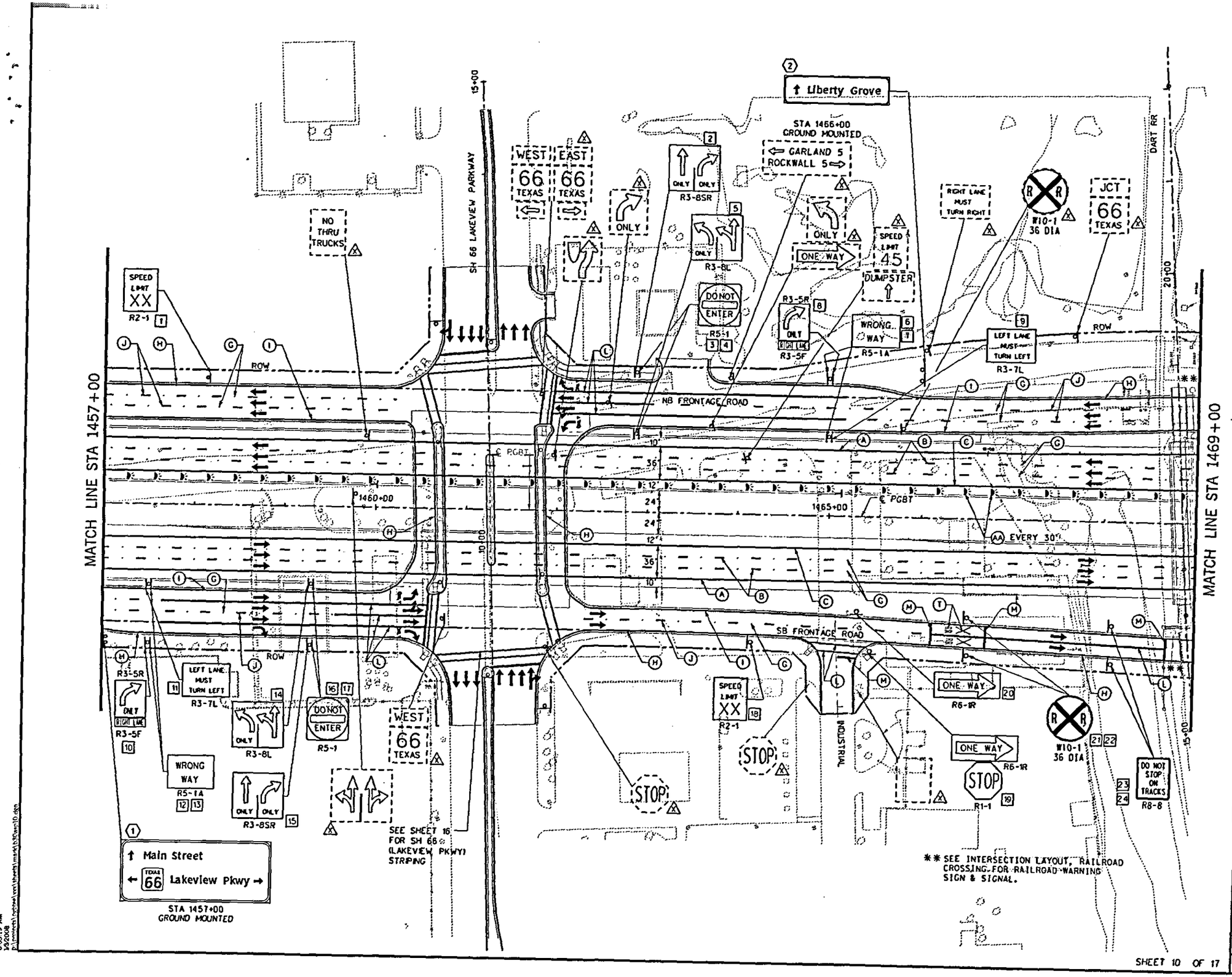

SCALE IN FEET: 0 50 100 150 200

LEGEND

- (A) - PREFAB PAV MRK WNTY (W)(SLD)(6")
- (B) - PREFAB PAV MRK WNTY (W)(BRK)(6")
- (C) - PREFAB PAV MRK WNTY (Y)(SLD)(6")
- (D) - PREFAB PAV MRK WNTY (W)(SLD)(12")
- (E) - PREFAB PAV MRK WNTY (W)(SLD)(24")
- (F) - REFL PAV MRK TY I (Y) 8" (SLD)
- (G) - REFL PAV MRK TY II - C - R
- (H) - REFL PAV MRK TY I (W) 6" (SLD)
- (I) - REFL PAV MRK TY I (Y) 6" (SLD)
- (J) - REFL PAV MRK TY I (W) 6" (BRK)
- (L) - REFL PAV MRK TY I (W) 12" (SLD)
- (M) - REFL PAV MRK TY I (W) 24" (SLD)
- (O) - REFL PAV MRK TY I (W) (TPL ARRW)
- (R) - REFL PAV MRK TY I (W) (TRN ARRW)
- (S) ONLY - REFL PAV MRK TY I (W) (WORD)
- (T) - REFL PAV MARK TY I (W) (RR XING)
- XX - SMALL SIGN NUMBER - PROPOSED
- (XX) - LARGE SIGN NUMBER - PROPOSED
- (AA) - DEL ASSEM (D-SY) SZ (TYC) (CTB)
- (AB) - DEL ASSEM (D-SW) SZ (TYC) (CTB)
- (AC) - DEL ASSEM (D-DW) SZ (FLX) (GND)
- (AD) - DEL ASSEM (D-DY) SZ (FLX) (SRF)
- (AE) - DEL ASSEM (D-SW) SZ (FLX) (GF2)
- (AF) - DEL ASSEM (D-SY) SZ (FLX) (GND)
- (BC) - OBJECT MRK ASSM (OM-2Z) (FLEX) (GND)
- * - EXISTING SIGN TO REMAIN
- (A) - EXISTING SIGN TO BE REMOVED (SUBSIDIARY)
- → - TRAFFIC FLOW ARROW (PROP)
- ⇨ - TRAFFIC FLOW ARROW (EXIST)
- ⊢ - STATION MARKERS

The seal appearing on this document was authorized by Lilah T. Ramey, P.E. 87868

Lilah Ramey
01-03-08

STATE OF TEXAS
LILAH T. RAMEY
87868
LICENSED
PROFESSIONAL ENGINEER

NO	DATE	REVISION	APPROV.

PRESIDENT GEORGE BUSH TURNPIKE

NTTA
NORTH TEXAS TOLLWAY AUTHORITY

SIGNING AND PAVEMENT MARKING PLAN

STA 1457+00 to 1469+00

Parsons Brinckerhoff Quade & Douglas, Inc.

LTRA

SECTION XXX

DRAWN AM DATE JAN 2008 REVIEWED LR DATE JAN 2008
CHECKED MM DATE JAN 2008 SCALE 1"=100'

CONTRACT NO. 02011-PGB-06-CN-EN SHEET 10 OF 17

SHEET 10 OF 17

8:03:19 AM
1/2/2008
p:\projects\pgbtwl\rel1\sheets\mark\b30sn10.dgn

8:03:19 AM

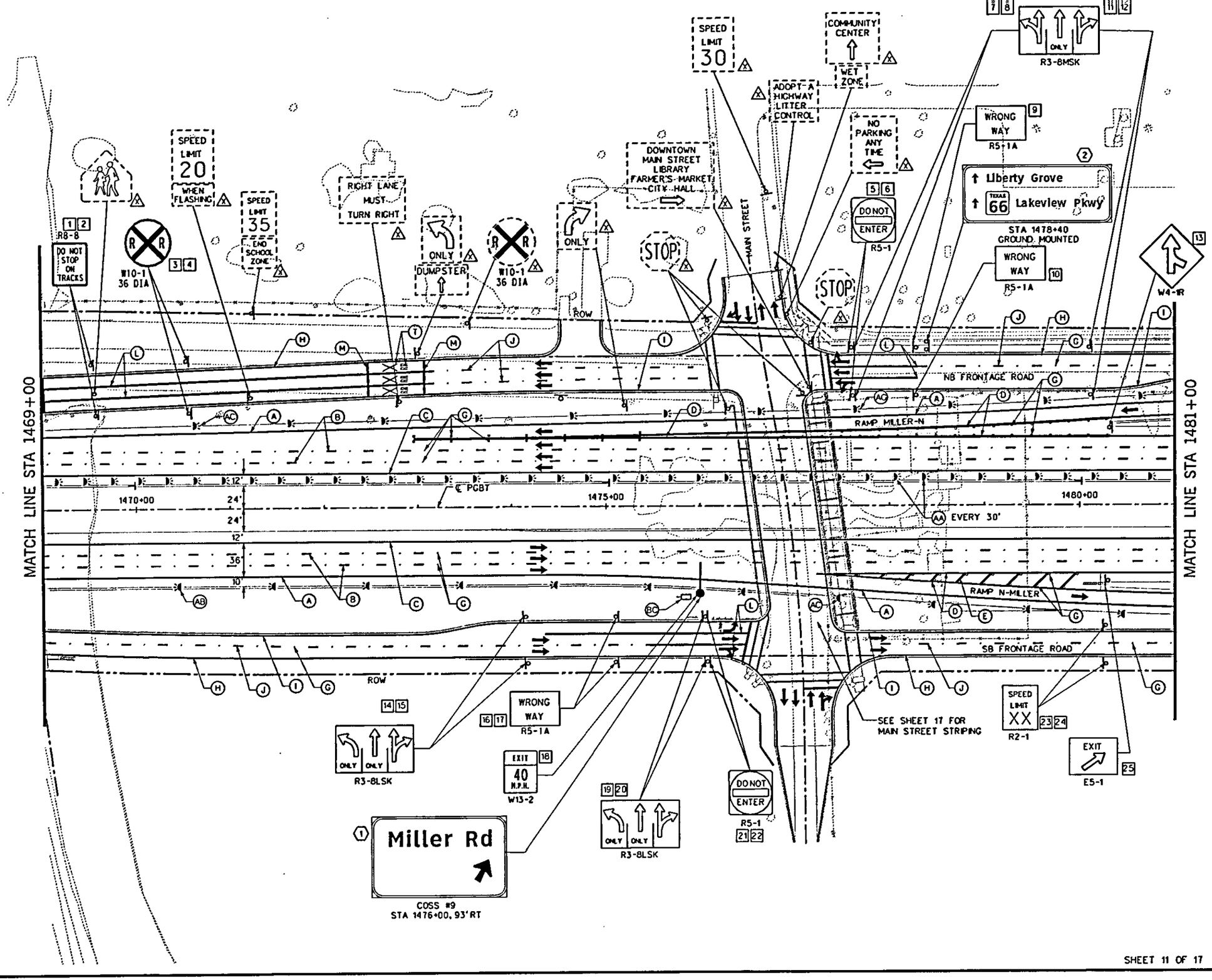

0 50 100 150 200
SCALE IN FEET

LEGEND

- (A) - PREFAB PAV MRK WNTY (W) (SLD)(6")
- (B) - PREFAB PAV MRK WNTY (W) (BRK)(6")
- (C) - PREFAB PAV MRK WNTY (Y) (SLD)(6")
- (D) - PREFAB PAV MRK WNTY (W) (SLD)(12")
- (E) - PREFAB PAV MRK WNTY (W) (SLD)(24")
- (F) - REFL PAV MRK TY I (Y) 8" (SLD)
- (G) - REFL PAV MRK TY II - C - R
- (H) - REFL PAV MRK TY I (W) 6" (SLD)
- (I) - REFL PAV MRK TY I (Y) 6" (SLD)
- (J) - REFL PAV MRK TY I (W) 6" (BRK)
- (L) - REFL PAV MRK TY I (W) 12" (SLD)
- (M) - REFL PAV MRK TY I (W) 24" (SLD)
- (O) - REFL PAV MRK TY I (W) (TPL ARRW)
- (R) - REFL PAV MRK TY I (W) (TRN ARRW)
- (S) ONLY - REFL PAV MRK TY I (W) (WORD)
- (T) - REFL PAV MARK TY 1 (W) (RR XING)
- XX - SMALL SIGN NUMBER - PROPOSED
- (XX) - LARGE SIGN NUMBER - PROPOSED
- (AA) - DEL ASSEM (D-SY) SZ (TYC) (CTB)
- (AB) - DEL ASSEM (D-SW) SZ (TYC) (CTB)
- (AC) - DEL ASSEM (D-DW) SZ (FLX) (GND)
- (AD) - DEL ASSEM (D-DY) SZ (FLX) (SRF)
- (AE) - DEL ASSEM (D-SW) SZ (FLX) (CF2)
- (AF) - DEL ASSEM (D-SY) SZ (FLX) (GND)
- (BC) - OBJECT MRK ASSM (OM-2Z) (FLEX) (GND)
- ✱ - EXISTING SIGN TO REMAIN
- (A) - EXISTING SIGN TO BE REMOVED (SUBSIDIARY)
- → - TRAFFIC FLOW ARROW (PROP)
- ⇨ - TRAFFIC FLOW ARROW (EXIST)
- ⊢ - STATION MARKERS

The seal appearing on this document was authorized by Lilah T. Ramey, P.E. 87868

Lilah Ramey
01-03-08

STATE OF TEXAS
LILAH T. RAMEY
87868
LICENSED
PROFESSIONAL ENGINEER

NO.	DATE	REVISION	APPROV.

PRESIDENT GEORGE BUSH TURNPIKE

NTTA
NORTH TEXAS TOLLWAY AUTHORITY

SIGNING AND PAVEMENT MARKING PLAN

STA 1469+00 to 1481+00

Parsons Brinckerhoff Quade & Douglas, Inc. | LTRA | SECTION XXX

DRAWN AM DATE JAN 2008 | DESIGNED LR DATE JAN 2008
CHECKED MM DATE JAN 2008 | SCALE 1"=100'

CONTRACT NO. 02011-PGB-06-CN-EN SHEET 10/18 OF

SHEET 11 OF 17

8:03:24 AM

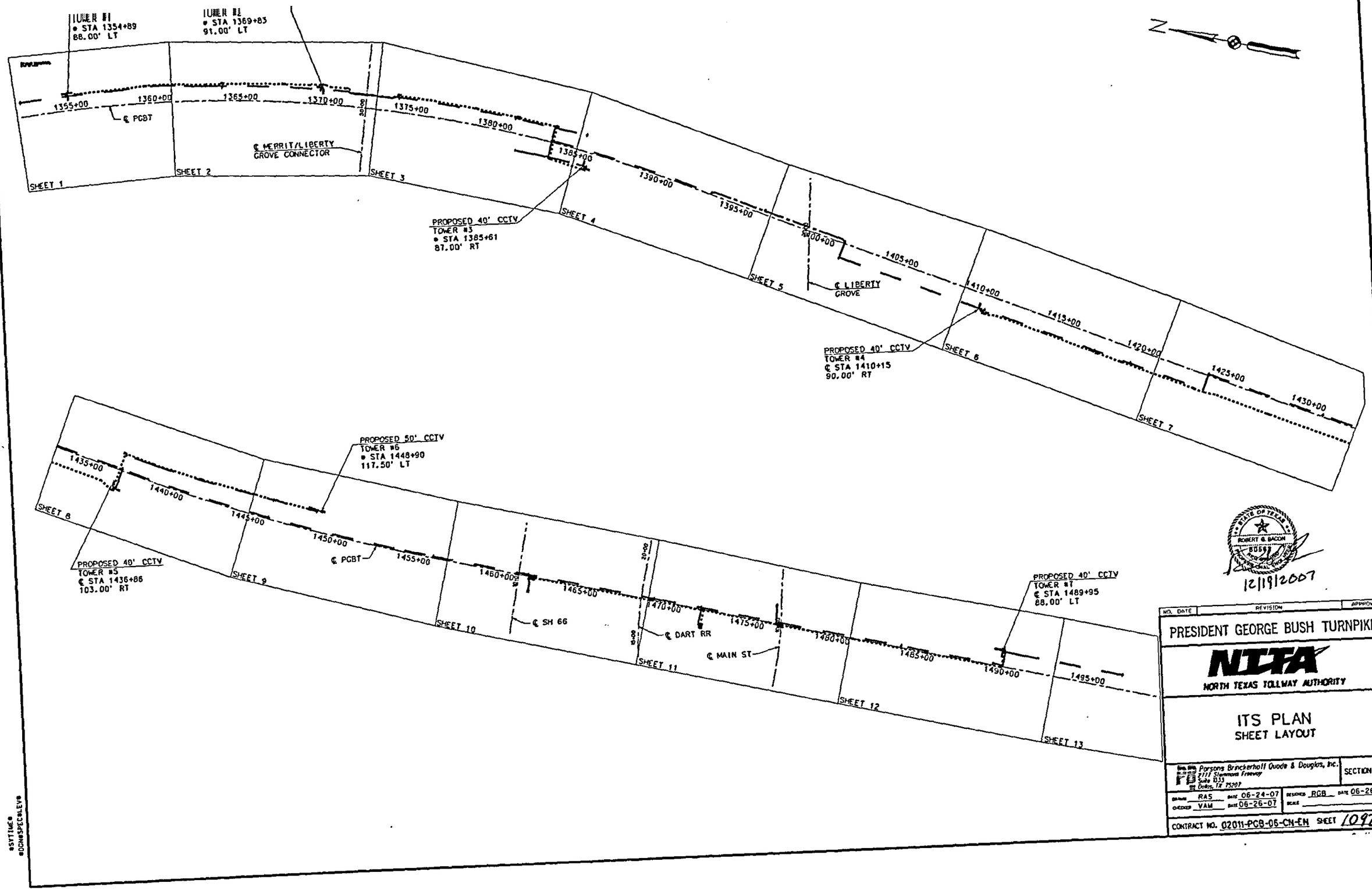

NO.	DATE	REVISION	APPROV.

PRESIDENT GEORGE BUSH TURNPIKE

NTTA
NORTH TEXAS TOLLWAY AUTHORITY

ITS PLAN
SHEET LAYOUT

Parsons Brinckerhoff Quade & Douglas, Inc.
2777 Stemmons Freeway
Suite 1533
Dallas, TX 75207

SECTION XXX

DRAWN RAS DATE 06-24-07
CHECKED VAM DATE 06-26-07
DESIGNED RGB DATE 06-26-07
SCALE

CONTRACT NO. 02011-PGB-06-CN-EN SHEET 1092

#USER#
#SYTIME#
#DGN#SPECBLEV#

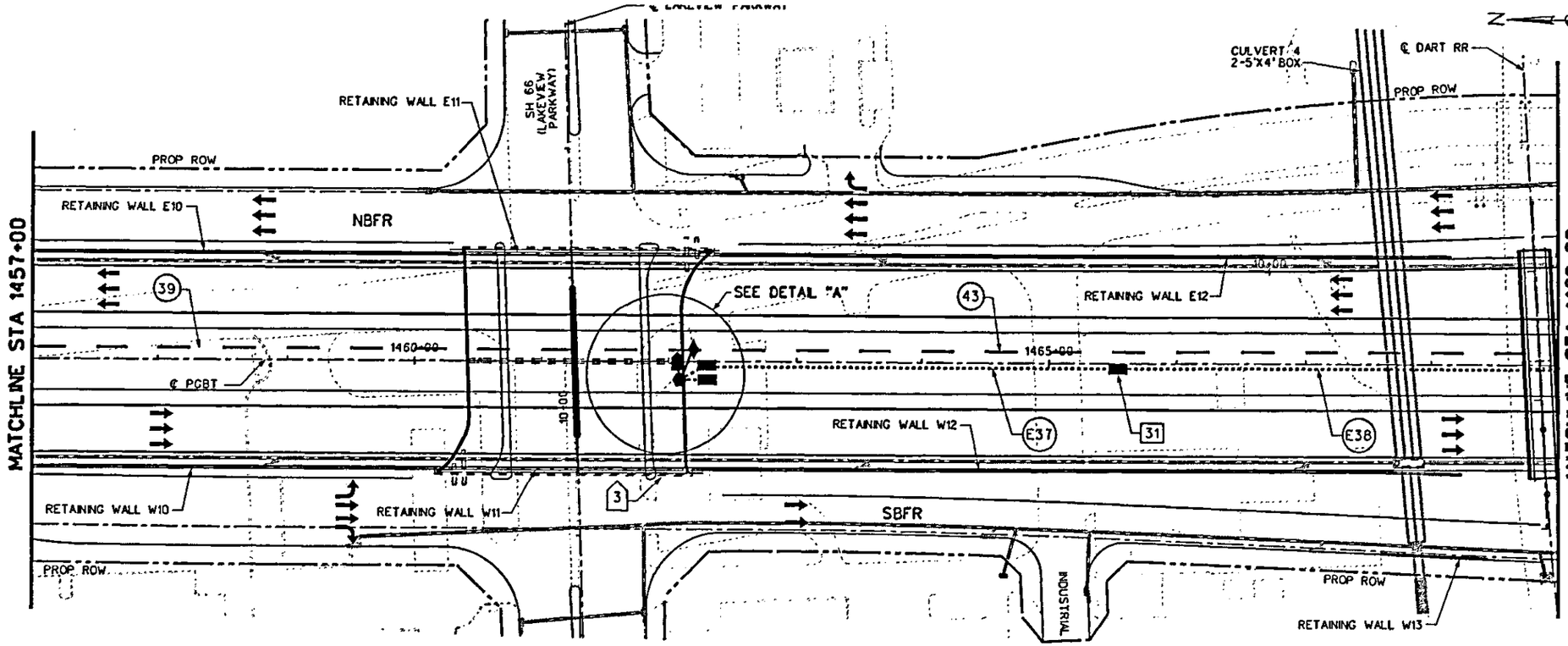

HORIZONTAL SCALE IN FEET

LEGEND

- PROPOSED CLOSED CIRCUIT TELEVISION (CCTV) TOWER
- FIBER OPTIC GROUND BOX W/APRON
- F/O GROUND BOX NUMBER
- GROUND BOX (TY D) (162922) W/APRON
- TYPE D GROUND BOX NUMBER
- JUNCTION BOX (STRUCTURE MOUNTED)
- JUNCTION BOX NUMBER
- PROPOSED PVC CONDUIT FOR FIBER
- PROPOSED RM CONDUIT FOR FIBER
- PROPOSED PVC CONDUIT FOR POWER
- PROPOSED RM CONDUIT FOR POWER
- CONDUIT RUN NUMBER
- ELECTRICAL CONDUIT RUN NUMBER
- GUIDE SIGN
- OVERHEAD SIGN BRIDGE
- PROPOSED ELECTRICAL SERVICE
- PROPOSED MINIPOWER ENCLOSURE

SEE ITS PLAN SHEET SUMMARIES LOCATED AT THE END OF THE ITS PLAN SHEETS FOR SHEET QUANTITIES.

ITEM 624 - TYPE D GROUND BOX SUMMARY (THIS SHEET ONLY)

GROUND BOX NUMBER	STA.	OFFSET (FT)
29	1462+14	9.00 RT
30	1462+14	3.00 RT
31	1465+55	3.00 RT

FIBER OPTIC GROUND BOX SUMMARY (THIS SHEET ONLY)

GROUND BOX NUMBER	STA.	OFFSET (FT)
25	1462+19	9.00 LT

JUNCTION BOX SUMMARY (THIS SHEET ONLY)

JUNCTION BOX NUMBER	STA.	OFFSET (FT)
2	1462+09	0.00

ITS CONDUIT RUNS (FT) AND CONDUCTORS (FT) SUMMARY (THIS SHEET ONLY)

RUN NO.	MULTIDUCT W/ 4-1.25" HDPE SMOOTH WALL INNER DUCTS		MULTIDUCT W/ 3-1.25" HDPE SMOOTH WALL INNER DUCTS		2 INCH		ELEC COND #6 AWG	
	PVC SCH 40	RM	PVC SCH 40	RM	PVC SCH 40	RM	INSULATED XHHW-2	BARE
40	-	-	18	-	-	-	-	-
41	-	-	-	-	-	30	-	-
42	OMITTED							
43	722	-	-	-	-	-	-	-
E35	-	-	-	-	10	-	-	-
E36	-	-	-	-	6	-	3@16	16
E37	-	-	-	-	341	-	3@346	346
E38	-	-	-	-	356	-	3@261	261
TOTAL	722	-	18	-	713	30	1869	623

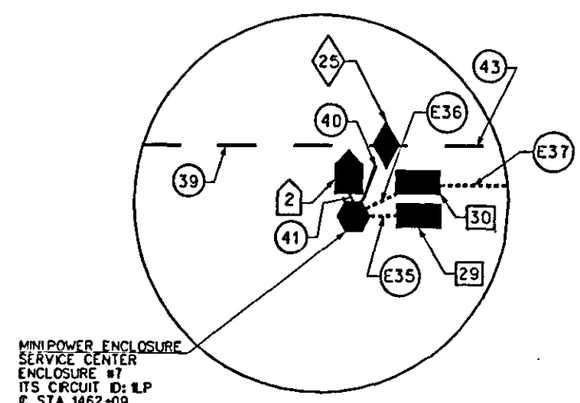

DETAIL "A"
N.T.S.

NOTES:

1. CONDUIT FOR FIBER OPTIC CABLE SHALL NOT ENTER THE TYPE D GROUND BOXES.
2. CONDUIT FOR ELECTRICAL CONDUCTORS SHALL NOT ENTER THE FIBER OPTIC GROUND BOXES.
3. SEE ELECTRICAL SERVICE CENTER TYPE MPE SHEET FOR DETAILS OF THE MINI POWER ENCLOSURE.
4. FIBER OPTIC GROUND BOXES AND TYPE D GROUND BOXES USED FOR THE ITS INSTALLATION CAN BE SHIFTED TO AVOID CONFLICTS.
5. WITH PRIOR APPROVAL FROM THE ENGINEER, CONTRACTOR MAY INSTALL ITS CONDUITS BY BORING METHOD AT NO ADDITIONAL COST TO THE NTTA.
6. CONTRACTOR TO ROUTE 1-2" RM (RUN 41) THROUGH COLUMN E OF BENT #2 AND MOUNT JUNCTION BOX #2 IN BENT CAP FOR CCTV CAMERAS (CAMERAS AND CABLES INSTALLED AT A LATER DATE BY OTHERS). INSTALL 1-2" CONDUIT FROM JUNCTION BOX TO EXTERIOR OF CAP PER THE ENGINEER. INSTALL NIPPLE ON END OF CONDUIT AND CAP FOR FUTURE USE.
7. CONTRACTOR TO INSTALL 5" THICK CONCRETE RIPRAP AROUND MPE PER ELECTRICAL SERVICE CENTER TYPE MPE ENCLOSURE DETAILS.

STATE OF TEXAS ROBERT G. BACON 80582 PROFESSIONAL ENGINEER
1/2/2008

NO.	DATE	REVISION	APPROV.

PRESIDENT GEORGE BUSH TURNPIKE

NTTA NORTH TEXAS TOLLWAY AUTHORITY

ITS PLAN
MAIN LANES
STA 1457+00 TO 1469+00

Parsons Brinckerhoff Quade & Douglas, Inc.
8111 Stemmons Freeway Suite 833
Dallas, TX 75207

SECTION XXX

DRAWN RAS DATE 06-26-07 DESIGNED RGB DATE 06-26-07
CHECKED VAM DATE 06-26-07 SCALE

CONTRACT NO. 02011-PGB-06-CN-EN SHEET 1102

SHEET 10 OF 13

$USER$
$TIME$
$DGNSPECALEV$

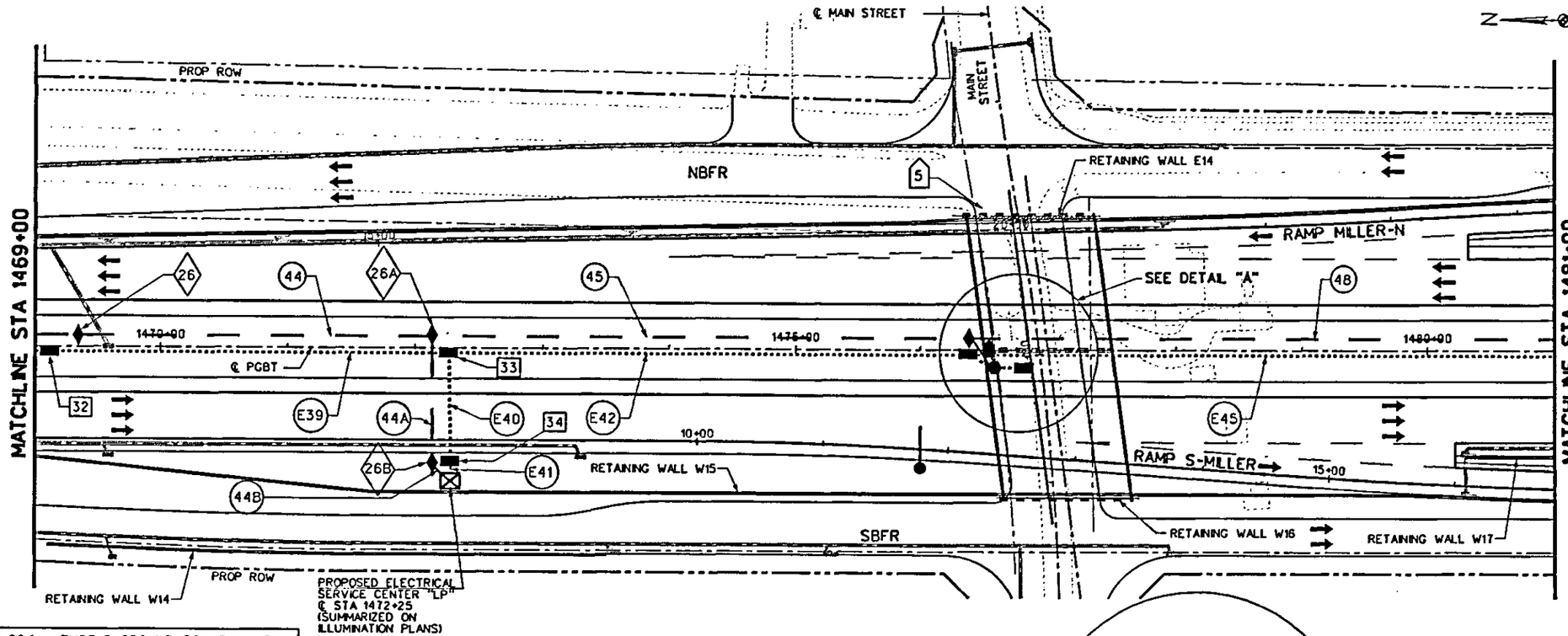

HORIZONTAL SCALE IN FEET

LEGEND

- PROPOSED CLOSED CIRCUIT TELEVISION (CCTV) TOWER
- FIBER OPTIC GROUND BOX W/APRON
- F/O GROUND BOX NUMBER
- GROUND BOX (TY D) (162922) W/APRON
- TYPE D GROUND BOX NUMBER
- JUNCTION BOX (STRUCTURE MOUNTED)
- JUNCTION BOX NUMBER
- PROPOSED PVC CONDUIT FOR FIBER
- PROPOSED RM CONDUIT FOR FIBER
- PROPOSED PVC CONDUIT FOR POWER
- PROPOSED RM CONDUIT FOR POWER
- CONDUIT RUN NUMBER
- ELECTRICAL CONDUIT RUN NUMBER
- GUIDE SIGN
- OVERHEAD SIGN BRIDGE
- PROPOSED ELECTRICAL SERVICE
- PROPOSED MINIPOWER ENCLOSURE

ITEM 624 - TYPE D GROUND BOX SUMMARY (THIS SHEET ONLY)

GROUND BOX NUMBER	STA.	OFFSET (FT)
32	1469+11	3.00 RT
33	1472+25	3.00 RT
34	1472+25	88.00 RT
35	1476+39	3.00 RT
36	1476+68	9.00 RT

FIBER OPTIC GROUND BOX SUMMARY (THIS SHEET ONLY)

GROUND BOX NUMBER	STA.	OFFSET (FT)
26	1469+41	9.00 LT
26A	1472+21	9.00 LT
26B	1472+21	88.00 RT
27	1476+39	9.00 LT

JUNCTION BOX SUMMARY (THIS SHEET ONLY)

JUNCTION BOX NUMBER	STA.	OFFSET (FT)
3	1476+52	0.00 LT

ITS CONDUIT RUNS (FT) AND CONDUCTORS (FT) SUMMARY (THIS SHEET ONLY)

RUN NO.	MULTIDUCT W/ 4-1.25" HDPE SMOOTH WALL INNER DUCTS		MULTIDUCT W/ 3-1.25" HDPE SMOOTH WALL INNER DUCTS		2 INCH		ELEC COND #4 AWG		ELEC COND #6 AWG		ELEC COND #8 AWG	
	PVC SCH 40	RM	PVC SCH 40	RM	PVC SCH 40	RM	INSULATED XHHW-2	BARE	INSULATED XHHW-2	BARE	INSULATED XHHW-2	BARE
44	280	-	-	-	-	-	-	-	-	-	-	-
44A	-	-	97	-	-	-	-	-	-	-	-	-
44B	-	-	17	-	-	-	-	-	-	-	-	-
45	453	-	-	-	-	-	-	-	-	-	-	-
46	-	-	26	-	-	-	-	-	-	-	-	-
47	-	-	-	-	-	35	-	-	-	-	-	-
48	726	-	-	-	-	-	-	-	-	-	-	-
E39	-	-	-	-	314	-	-	-	3@319	319	-	-
E40	-	-	-	-	88	-	3@93	93	3@93	93	3@93	93
E41	-	-	-	-	16	-	3@26	26	3@26	26	3@26	26
E42	-	-	-	-	414	-	3@419	419	-	-	3@419	419
E43	-	-	-	-	10	-	-	-	-	-	3@20	20
E44	-	-	-	-	10	-	-	-	-	-	-	-
E45	-	-	-	-	470	-	3@475	475	-	-	-	-
TOTAL	1459	-	140	-	1322	35	3039	1013	1314	438	1674	558

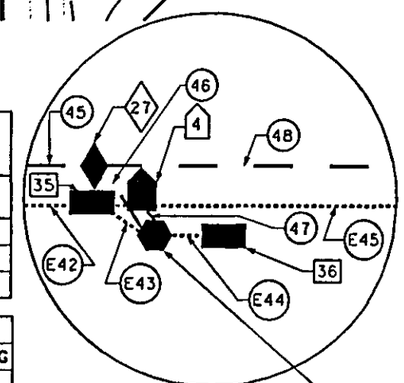

DETAIL "A"
N.T.S.

MINIPOWER ENCLOSURE
SERVICE CENTER
ENCLOSURE #8
ITS CIRCUIT ID: 2LP
℄ STA 1476+58
9.00' RT

SEE ITS PLAN SHEET SUMMARIES LOCATED AT THE END OF THE ITS PLAN SHEETS FOR SHEET QUANTITIES.

NOTES:

1. CONDUIT FOR FIBER OPTIC CABLE SHALL NOT ENTER THE TYPE D GROUND BOXES.
2. CONDUIT FOR ELECTRICAL CONDUCTORS SHALL NOT ENTER THE FIBER OPTIC GROUND BOXES.
3. SEE ELECTRICAL SERVICE CENTER TYPE MPE SHEET FOR DETAILS OF THE MINI POWER ENCLOSURE.
4. FIBER OPTIC GROUND BOXES AND TYPE D GROUND BOXES USED FOR THE ITS INSTALLATION CAN BE SHIFTED TO AVOID CONFLICTS.
5. WITH PRIOR APPROVAL FROM THE ENGINEER, CONTRACTOR MAY INSTALL ITS CONDUITS BY BORING METHOD AT NO ADDITIONAL COST TO THE NTTA.
6. CONTRACTOR TO ROUTE 1-2" RM (RUN 46) THROUGH COLUMN A OF BENT #2 AND MOUNT JUNCTION BOX #3 IN BENT CAP FOR CCTV CAMERAS (CAMERAS AND CABLES INSTALLED AT A LATER DATE BY OTEHRS). INSTALL 1-2" CONDUIT FROM JUNCTION BOX TO EXTERIOR OF CAP PER ENGINEER. INSTALL NIPPLE ON END OF CONDUIT AND CAP FOR FUTURE USE.
7. CONTRACTOR TO INSTALL 5" THICK CONCRETE RIPRAP AROUND MPE PER ELECTRICAL SERVICE CENTER TYPE MPE ENCLOSURE DETAILS.
8. SEE ILLUMINATION PLANS FOR ADDITIONAL INFORMATION ABOUT THE ELECTRICAL SERVICE CENTER.

STATE OF TEXAS
ROBERT G. BACON
80582
12/18/2007

NO.	DATE	REVISION	APPROV.

PRESIDENT GEORGE BUSH TURNPIKE

NTTA
NORTH TEXAS TOLLWAY AUTHORITY

ITS PLAN
MAIN LANES
STA 1469+00 TO 1481+00

Parsons Brinckerhoff Quade & Douglas, Inc.
2711 Stemmons Freeway
Suite D33
Dallas, TX 75207

SECTION XXX

DRAWN RAS DATE 06-26-07 DESIGNED RGB DATE 06-26-07
CHECKED VAM DATE 06-26-07 SCALE

SHEET 11 OF 13

CONTRACT NO. 02011-PGB-06-CN-EN SHEET 1103

$USER$
$STYTIME$
$DGNSPEC$LEV$

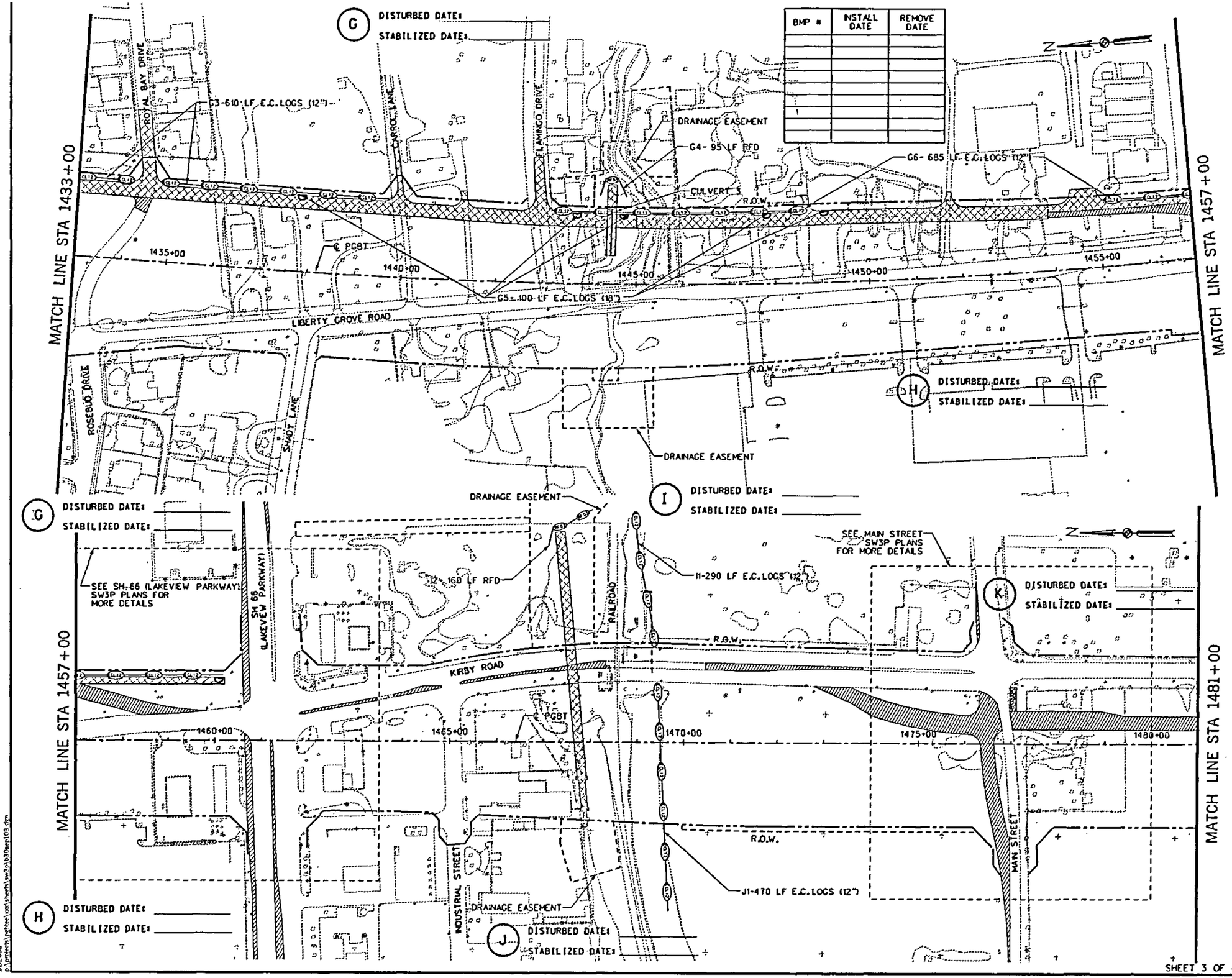

BMP #	INSTALL DATE	REMOVE DATE

0 100 200 300 400
SCALE IN FEET

LEGEND

- SCF — TEMP SEDIMENT CONTROL FENCE
- ECL 12" — 12" DIA BIODEGRADABLE E.C. LOGS
- 18" DIA BIODEGRADABLE E.C. LOGS (INLET PROTECTION)
- RFD3 — ROCK FILTER DAM (TY3)
- CONSTRUCTION EXIT
- CONSTRUCTION THIS PHASE
- CONSTRUCTION PREVIOUS PHASE
- BRIDGE CONSTRUCTION
- TEMPORARY PAVEMENT
- * REMAIN FROM PREVIOUS PHASE

NOTES:

1. LOCATIONS OF EROSION CONTROL DEVICES ARE APPROXIMATIONS. ACTUAL LOCATIONS TO BE DETERMINED IN THE FIELD BY THE ENGINEER.
2. EROSION CONTROL DEVICES SHALL BE INSTALLED PRIOR TO THE START OF ANY CONSTRUCTION ACTIVITY AND SHALL REMAIN IN PLACE UNTIL CONSTRUCTION IS COMPLETE.
3. ALL INLETS AND JUNCTION BOXES WITHIN THE PROJECT LIMITS OR AFFECTED BY CONSTRUCTION DEBRIS SHALL BE PROTECTED AT ALL TIMES.
4. EROSION CONTROL DEVICE INSTALLATION, MAINTENANCE, AND REMOVAL SHALL BE IN ACCORDANCE WITH TxDOT STANDARDS FOR EROSION CONTROL.
5. FOR GRATE INLETS, E.C. LOGS (18") = 25 LF. FOR CURB INLETS, E.C. LOGS (18") = 20 LF.

The seal appearing on this document was authorized by Lilah T. Ramey, P.E. 87868

Lilah Ramey
01-02-08

STATE OF TEXAS
LILAH T. RAMEY
87868
LICENSED
PROFESSIONAL ENGINEER

NO.	DATE	REVISION	APPRV

PRESIDENT GEORGE BUSH TURNPIKE

NTTA
NORTH TEXAS TOLLWAY AUTHORITY

STORM WATER POLLUTION PREVENTION PLAN (SW3P)
PHASE 1
STA 1433+00 TO STA 1481+00

Parsons Brinckerhoff Quade & Douglas, Inc.

LTRA

SECTION XXX

DRAWN AM DATE JAN 2008 DESIGNED LR DATE JAN 2008
CHECKED MM DATE JAN 2008 SCALE 1"=200'

CONTRACT NO. 02011-PGB-06-CN-EN SHEET 128 OF

SHEET 3 OF 4

2:28:23 PM
1/22/2008
p:\projects\pgbtwy\sw3p\h3\Sheets\03.dgn

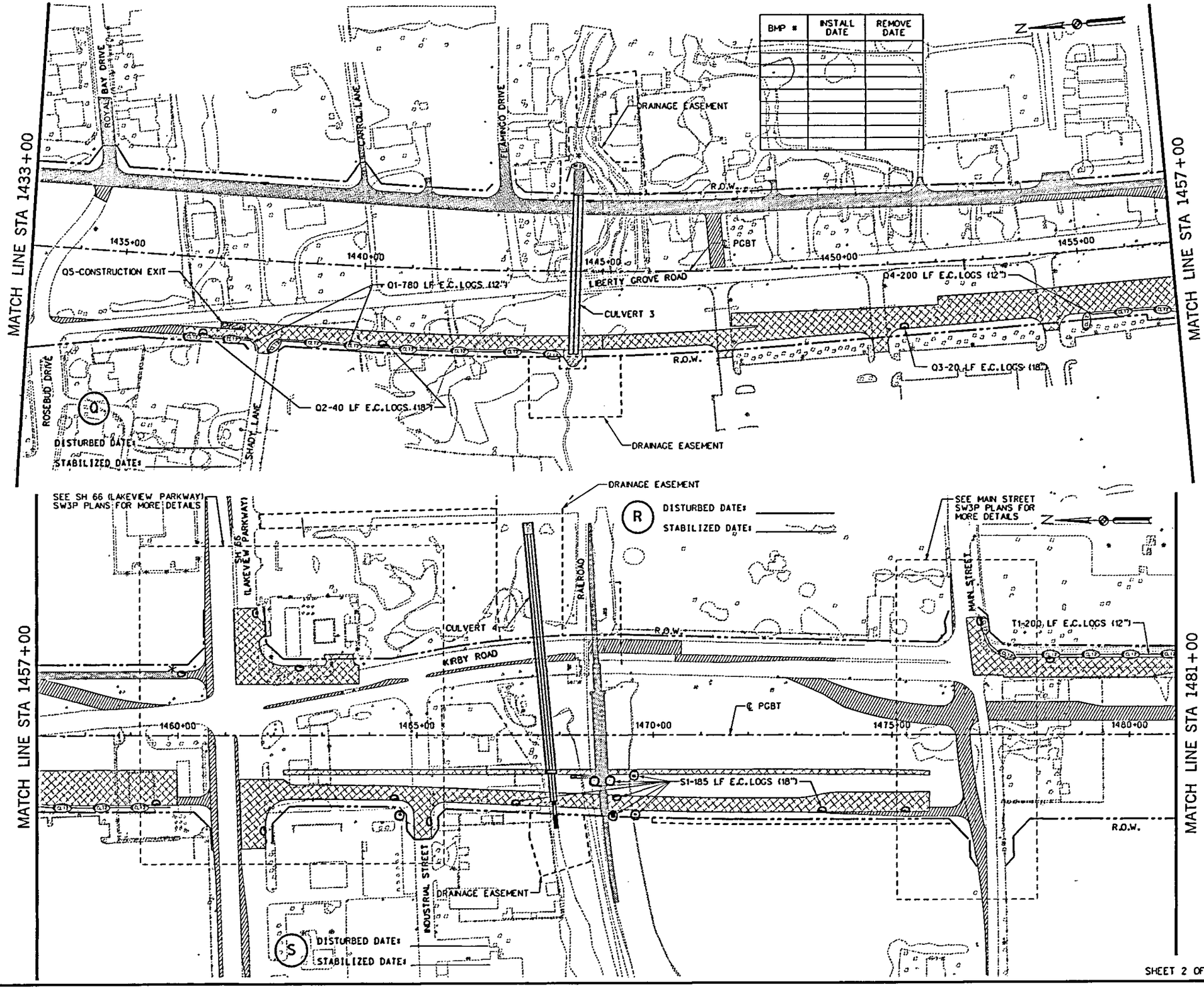

BMP #	INSTALL DATE	REMOVE DATE

0 100 200 300 400
SCALE IN FEET

LEGEND

- SCF — TEMP SEDIMENT CONTROL FENCE
- ECL12" — 12" DIA BIODEGRADABLE E.C.LOGS
- 18" DIA BIODEGRADABLE E.C.LOGS (INLET PROTECTION)
- RFD3 — ROCK FILTER DAM (TY3)
- CONSTRUCTION EXIT
- CONSTRUCTION THIS PHASE
- CONSTRUCTION PREVIOUS PHASE
- BRIDGE CONSTRUCTION
- TEMPORARY PAVEMENT
- * REMAIN FROM PREVIOUS PHASE

NOTES:

1. LOCATIONS OF EROSION CONTROL DEVICES ARE APPROXIMATIONS. ACTUAL LOCATIONS TO BE DETERMINED IN THE FIELD BY THE ENGINEER.
2. EROSION CONTROL DEVICES SHALL BE INSTALLED PRIOR TO THE START OF ANY CONSTRUCTION ACTIVITY AND SHALL REMAIN IN PLACE UNTIL CONSTRUCTION IS COMPLETE.
3. ALL INLETS AND JUNCTION BOXES WITHIN THE PROJECT LIMITS OR AFFECTED BY CONSTRUCTION DEBRIS SHALL BE PROTECTED AT ALL TIMES.
4. EROSION CONTROL DEVICE INSTALLATION, MAINTENANCE, AND REMOVAL SHALL BE IN ACCORDANCE WITH TxDOT STANDARDS FOR EROSION CONTROL.
5. FOR GRATE INLETS, E.C.LOGS (18") = 25 LF. FOR CURB INLETS, E.C.LOGS (18") = 20 LF.

The seal appearing on this document was authorized by Lilah T. Ramey, P.E. 87868

Lilah Ramey
01-02-08

STATE OF TEXAS — LILAH T. RAMEY — 87868 — LICENSED — PROFESSIONAL ENGINEER

NO.	DATE	REVISION	APPROV.

PRESIDENT GEORGE BUSH TURNPIKE

NTTA
NORTH TEXAS TOLLWAY AUTHORITY

STORM WATER POLLUTION PREVENTION PLAN (SW3P) PHASE 2

STA 1433+00 TO STA 1481+00

Parsons Brinckerhoff Quade & Douglas, Inc. | LTRA | SECTION XXX

DRAWN AW DATE JAN 2008 | DESIGNED LR DATE JAN 2008
CHECKED MM DATE JAN 2008 | SCALE 1"=200'

CONTRACT NO. 02011-PGB-06-CN-EN SHEET 113 of

SHEET 2 OF 3

2:29:22 PM
1/2/2008
D:\projects\pgbtwy\sw3p\b3\ben203.dgn

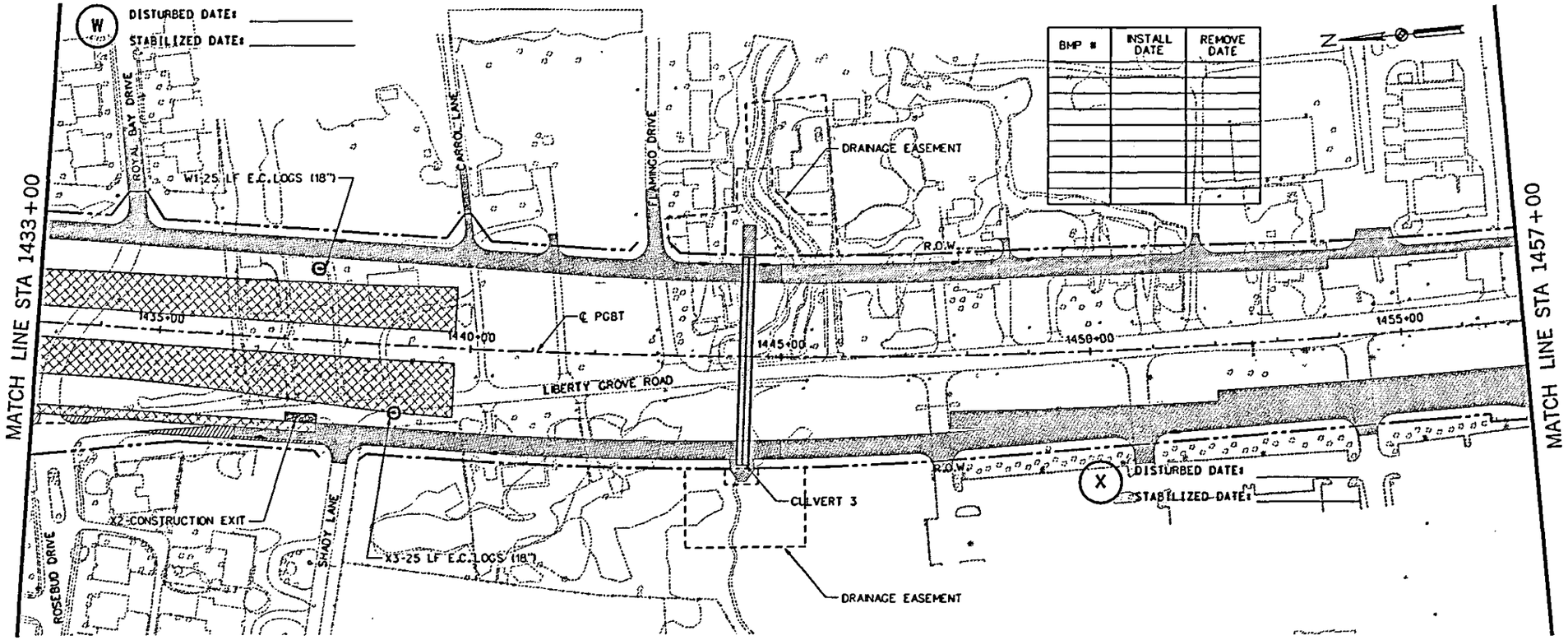

BMP #	INSTALL DATE	REMOVE DATE

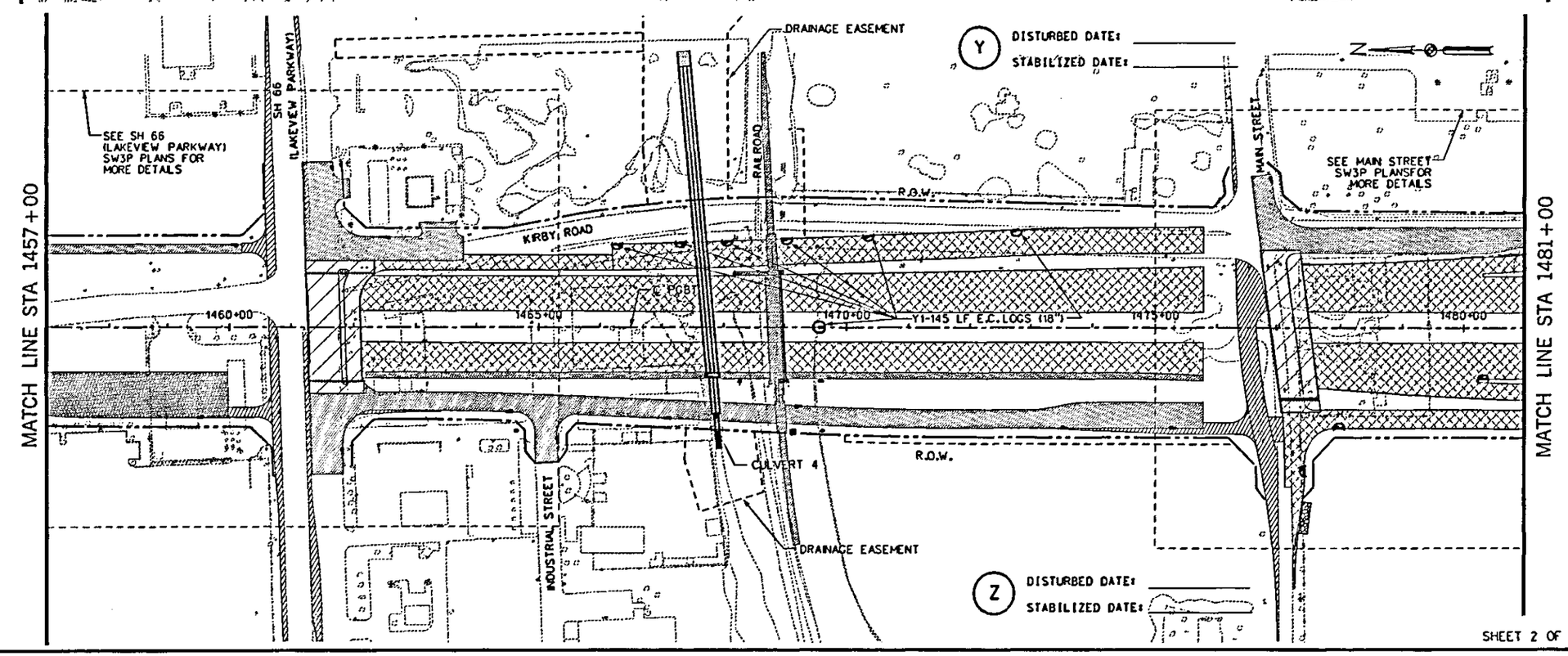

SHEET 2 OF 3

0 100 200 300 400
SCALE IN FEET

LEGEND

- SCF — TEMP SEDIMENT CONTROL FENCE
- ECL12" — 12" DIA BIODEGRADABLE E.C. LOGS
- 18" DIA BIODEGRADABLE E.C. LOGS (INLET PROTECTION)
- RFD3 — ROCK FILTER DAM (TY3)
- CONSTRUCTION EXIT
- CONSTRUCTION THIS PHASE
- CONSTRUCTION PREVIOUS PHASE
- BRIDGE CONSTRUCTION
- TEMPORARY PAVEMENT
- * REMAIN FROM PREVIOUS PHASE

NOTES:

1. LOCATIONS OF EROSION CONTROL DEVICES ARE APPROXIMATIONS. ACTUAL LOCATIONS TO BE DETERMINED IN THE FIELD BY THE ENGINEER.
2. EROSION CONTROL DEVICES SHALL BE INSTALLED PRIOR TO THE START OF ANY CONSTRUCTION ACTIVITY AND SHALL REMAIN IN PLACE UNTIL CONSTRUCTION IS COMPLETE.
3. ALL INLETS AND JUNCTION BOXES WITHIN THE PROJECT LIMITS OR AFFECTED BY CONSTRUCTION DEBRIS SHALL BE PROTECTED AT ALL TIMES.
4. EROSION CONTROL DEVICE INSTALLATION, MAINTENANCE, AND REMOVAL SHALL BE IN ACCORDANCE WITH TxDOT STANDARDS FOR EROSION CONTROL.
5. FOR GRATE INLETS, E.C. LOGS (18") = 25 LF. FOR CURB INLETS, E.C. LOGS (18") = 20 LF.

The seal appearing on this document was authorized by Lilah T. Ramey, P.E. 87868

Lilah Ramey 01-02-08

STATE OF TEXAS — LILAH T. RAMEY 87868 — LICENSED PROFESSIONAL ENGINEER

NO.	DATE	REVISION	APPROV

PRESIDENT GEORGE BUSH TURNPIKE

NTTA
NORTH TEXAS TOLLWAY AUTHORITY

STORM WATER POLLUTION PREVENTION PLAN (SW3P)
PHASE 3
STA 1433+00 TO STA 1481+00

Parsons Brinckerhoff Quade & Douglas, Inc. | LTRA | SECTION XXX

DRAWN AM DATE JAN 2008 | DESIGNED LR DATE JAN 2008
CHECKED MM DATE JAN 2008 | SCALE 1"=200'

CONTRACT NO. 02011-PGB-06-CN-EN SHEET 114 OF

2:30:20 PM
1/2/2008
p:\projects\rpbhea\rpt\sheets\sw3p\b3\hea303.dgn

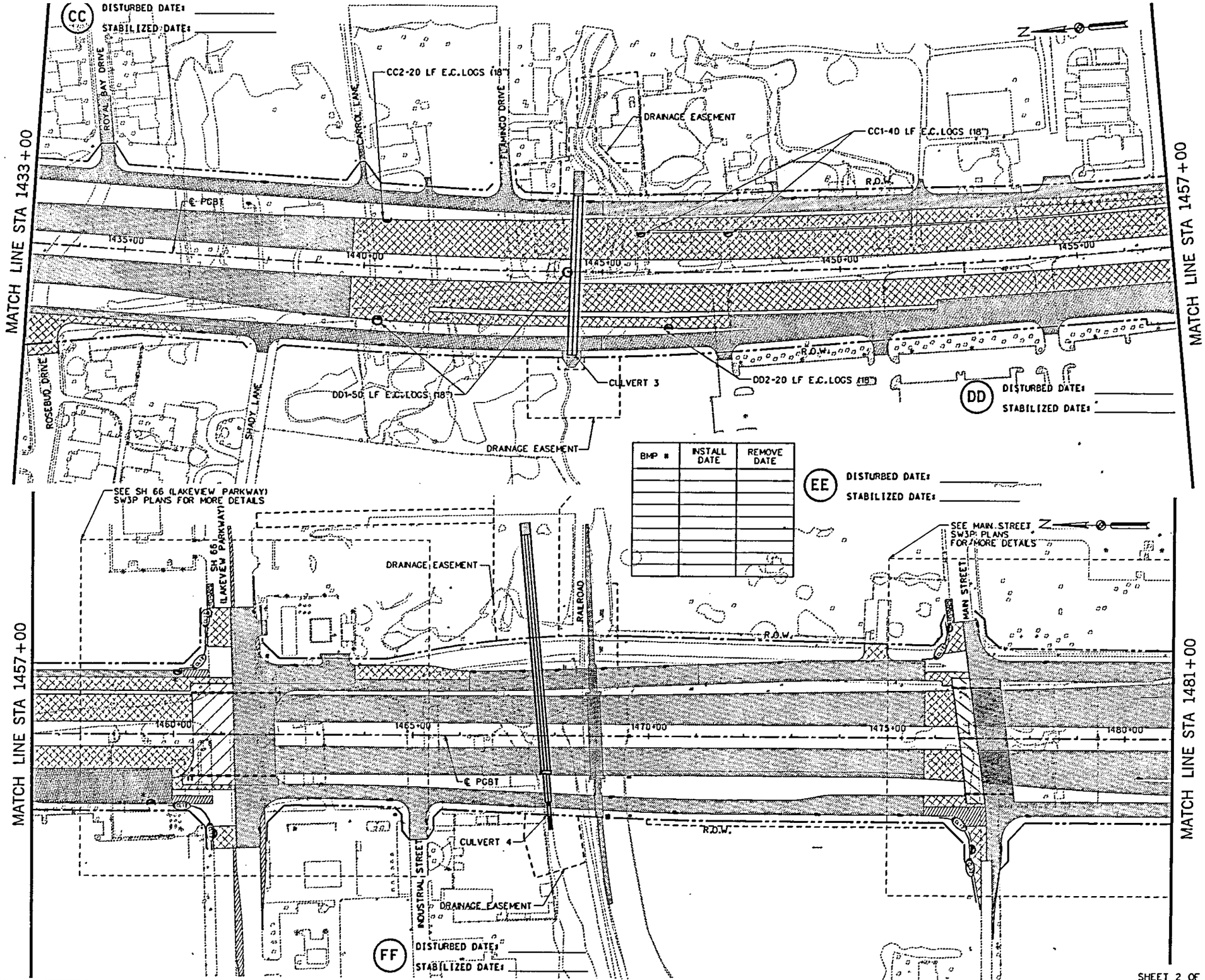

BMP #	INSTALL DATE	REMOVE DATE

0 100 200 300 400
SCALE IN FEET

LEGEND

- SCF — TEMP SEDIMENT CONTROL FENCE
- ECL12" — 12" DIA BIODEGRADABLE E.C.LOGS
- 18" DIA BIODEGRADABLE E.C.LOGS (INLET PROTECTION)
- RFD3 — ROCK FILTER DAM (TY3)
- CONSTRUCTION EXIT
- CONSTRUCTION THIS PHASE
- CONSTRUCTION PREVIOUS PHASE
- BRIDGE CONSTRUCTION
- TEMPORARY PAVEMENT
- * REMAIN FROM PREVIOUS PHASE

NOTES:

1. LOCATIONS OF EROSION CONTROL DEVICES ARE APPROXIMATIONS. ACTUAL LOCATIONS TO BE DETERMINED IN THE FIELD BY THE ENGINEER.
2. EROSION CONTROL DEVICES SHALL BE INSTALLED PRIOR TO THE START OF ANY CONSTRUCTION ACTIVITY AND SHALL REMAIN IN PLACE UNTIL CONSTRUCTION IS COMPLETE.
3. ALL INLETS AND JUNCTION BOXES WITHIN THE PROJECT LIMITS OR AFFECTED BY CONSTRUCTION DEBRIS SHALL BE PROTECTED AT ALL TIMES.
4. EROSION CONTROL DEVICE INSTALLATION, MAINTENANCE, AND REMOVAL SHALL BE IN ACCORDANCE WITH TxDOT STANDARDS FOR EROSION CONTROL.
5. FOR GRATE INLETS, E.C.LOGS (18") = 25 LF. FOR CURB INLETS, E.C.LOGS (18") = 20 LF.

The seal appearing on this document was authorized by Lilah T. Ramey, P.E. 87868

Lilah Ramey
01-02-08

STATE OF TEXAS
LILAH T. RAMEY
87868
LICENSED
PROFESSIONAL ENGINEER

NO.	DATE	REVISION	APPROV.

PRESIDENT GEORGE BUSH TURNPIKE

NTTA
NORTH TEXAS TOLLWAY AUTHORITY

STORM WATER POLLUTION PREVENTION PLAN (SW3P)
PHASE 4
STA 1433+00 TO STA 1481+00

Parsons Brinckerhoff Quade & Douglas, Inc. | LTRA | SECTION XXX

DRAWN AM DATE JAN 2008 | DESIGNED LR DATE JAN 2008
CHECKED MM DATE JAN 2008 | SCALE 1"=200'

CONTRACT NO. 02011-PGB-06-CN-EN SHEET 11 OF 52

SHEET 2 OF 3

2:31:06 PM
1/02/2008
J:\projects\pgbtpk\cad\sheets\sw3p\b30ene403.dgn

During the planning phase of project development the following environmental permits, issues and commitments have been developed during coordination with resource agencies, local governmental entities and the general public. Any change orders and/or deviations from the final design must be reported to the Engineer prior to the commencement of construction activities, as additional environmental clearances may be required.

I. Clean Water Act, Section 402 Texas Pollutant Discharge Elimination System

(Addresses MS4 requirements for project)

☐ No Action Required ☒ Required Action

Action No.	Waters of the US/Station # R/L of Centerline	Commitment
1. File NOI with TCEQ for CGP		Comply with TPDES CGP. Contractor must implement and maintain a SW3P. See SW3P Plan Sheet, BMPs, and detail. Contractor must stabilize project site as stated in SW3P.
Water 11	1395+82	
Water 12	1403+00	
Water 13	1445+00	
Water 14	11467+36	
Water 15	1493+74	
2. File NOT with TCEQ		Contractor must stabilize the project site as stated in the SW3P.

II. Clean Water Act, Section 401 and 404 Compliance

Filling, dredging or excavating in any water bodies, rivers, creeks, streams, wetlands or wet area is prohibited unless specified in the USACE permit and approved by the Engineer.

☐ No Permit Required ☒ 404 Permit and 401 Certification Required

Permit	Required Action	Waters of the US	Applicable Plan Sheet Number
Individual Permit # 200000657	Comply with all conditions of IP 200000657	Water 11	163
		Water 12	164
		Water 13	167/168
		Water 14	169
		Water 15	172

NOTE: Compensatory Mitigation provided by In Lieu Fee to the Trinity River Mitigation Bank.

Best Management Practices for applicable 401 General Conditions:

General Condition 12 - Categories I and II BMPs required

Category I (Erosion Control)

- ☒ Temporary Vegetation
- ☐ Mulch
- ☐ Interceptor Swale
- ☐ Erosion Control Compost
- ☐ Compost Filter Berms and Socks
- ☒ Blankets, Matting
- ☒ Sod
- ☐ Diversion Dike
- ☐ Mulch Filter Berms and Socks
- ☐ Compost Blankets

Category II (Sedimentation Control)

- ☐ Sand Bag Berm
- ☒ Silt Fence
- ☐ Triangular Filter Dike
- ☐ Stone Outlet Sediment Traps
- ☐ Erosion Control Compost
- ☐ Compost Filter Berms and Socks
- ☒ Rock Berm
- ☐ Hay Bale Dike
- ☐ Brush Berms
- ☐ Sediment Basins
- ☐ Mulch Filter Berms and Socks

General Condition 21 - Category III BMPs required

Category III (Post-Construction TSS Control)

- ☐ Retention/Irrigation
- ☐ Extended Detention Basin
- ☒ Vegetative Filter Strips
- ☐ Grassy Swales
- ☐ Erosion Control Compost
- ☐ Compost Filter Berms and Socks
- ☐ Constructed Wetlands
- ☐ Wet Basins
- ☐ Vegetation-Lined Ditches
- ☐ Sand Filter Systems
- ☐ Mulch Filter Berms and Socks
- ☐ Sedimentation Chambers

III. Cultural Resources

Upon discovery of archeological artifacts (bones, burnt rock, flint, pottery, etc.) cease work in the immediate area and contact the Engineer immediately.

☒ No Action Required ☒ Required Action

Action No.	Station # R/L of Centerline	Commitment
		Coyle House issues will need to resolved prior to construction
		Archaeological Survey remains outstanding and results / Commitments will be documented once results are known

IV. Vegetation Resources

☐ No Action Required ☒ Required Action

Action No.	Station # R/L of Centerline	Commitment
1	Entire Project	Permanent soil erosion features would be constructed as soon as feasible during the early stage of construction through proper seeding and/ or sodding techniques. Disturbed areas would be restored and stabilized as soon as contractors schedule permits. Temporary seeding would be considered where large areas of disturbed ground would be left bare for a considerable length of time. Use only native plants for landscaping and in seeding mixtures where practicable.

V. Federal Listed, and Proposed Threatened and Endangered Species, Critical Habitat, State Listed Species, Candidate Species and Migratory Birds

☐ No Action Required ☒ Required Action

Species Potentially within Project Area w/ Description	Habitat Description
Timber/ Canebrake Rattlesnake- Black or dark brown crossbands down the back, broad dark shape present behind the eye. Black tail above the rattle up to 25% of the body length.	Swamps, floodplains, upland woodlands, riparian zones, abandoned farmlands: prefer dense ground cover.

Special Notes

Coordination with USFWS and TPWD would continue throughout the project to endure adequate measures are adopted to reduce or eliminate impacts to species

Action

1. If the listed species is observed in the immediate area, do not disturb the species or habitat and contact Ms. Kelly Malorana at 972-628-3132 immediately.

2. Any areas to be cleared of vegetation between the months of March and August would be surveyed by a qualified biologist for signs of any listed species within the area or nesting activity of species covered under the Migratory Bird Treaty Act.

VI. Hazardous Materials or Contamination Issues

Comply with the Hazardous Communication Act for personnel who will be working with hazardous materials by conducting safety meetings prior to beginning construction and making workers aware of the potential hazards in the workplace. Ensure that all workers are provided with personal protective equipment appropriate for any hazardous materials used.

Obtain and keep on-site Material Safety Data Sheets (MSDS) for all hazardous products used on the project which may include, but are not limited to, the following categories: Paints, acids, solvents, asphalt products, chemical additives, fuels and concrete curing compounds or additives. Provide protected storage, off bare ground and covered, for products which may be hazardous. Maintain product labeling as required by the Act.

Maintain an adequate supply of on-site spill response materials, as indicated in the MSDS. In the event of a spill, take actions to mitigate the spill as indicated in the MSDS, in accordance with safe work practices, and contact the District Spill Coordinator immediately. The Contractor shall be responsible for the proper containment and cleanup of all product spills.

Contact the Engineer if any of the following are detected:

- Dead or distressed vegetation (not identified as normal)
- Trash piles, drums, canisters, barrels, etc.
- Undesirable smells/odors
- Underground storage tanks
- Evidence of leaching or seepage of substances
- Any other evidence indicating possible hazardous materials or contamination discovered on-site

****

Does the project involve any bridge class structure rehabilitation or replacements (bridge class structures do not include box culverts)?

☐ Yes ☒ No

If "No", then no further action required.
If "Yes", then NTTA is responsible for completing an asbestos assessment/inspection.
Are the results of the asbestos inspection positive (is asbestos present)?

☐ Yes ☐ No

If "Yes", then NTTA must retain a Texas Department of State Health Services (DSHS) licensed asbestos consultant to assist with the notification, develop abatement/mitigation procedures, and perform management activities as necessary. The notification form to DSHS must be postmarked at least 10 working days prior to scheduled abatement activities and/or demolition.
If "No", then NTTA is still required to notify DSHS 10 working days prior to any scheduled rehabilitation or demolition.
In either case, the Contractor is responsible for providing the date(s) for abatement activities and/or demolition with careful coordination between the Engineer and asbestos consultant in order to minimize construction delays and subsequent claims.

VII. Other Environmental Issues

☒ No Action Required ☐ Required Action

Action No.	Station # R/L of Centerline	Commitment

List of Abbreviations

- BMP: Best Management Practice
- CGP: Construction General Permit
- FEMA: Federal Emergency Management Agency
- FHWA: Federal Highway Administration
- MOA: Memorandum of Agreement
- MOU: Memorandum of Understanding
- MS4: Municipal Separate Stormwater Sewer System
- NOI: Notice of Intent
- NOT: Notice of Termination
- NWP: Nationwide Permit
- PCN: Pre-Construction Notification
- SW3P: Storm Water Pollution Prevention Plan
- TCEQ: Texas Commission on Environmental Quality
- TPDES: Texas Pollutant Discharge Elimination System
- TPWD: Texas Parks and Wildlife Department
- TxDOT: Texas Department of Transportation
- T&E: Threatened and Endangered Species
- USFWS: U.S. Fish and Wildlife Service

NO.	DATE	REVISION	APPROV.

PRESIDENT GEORGE BUSH TURNPIKE

NTTA
NORTH TEXAS TOLLWAY AUTHORITY

ENVIRONMENTAL PERMITS, ISSUES AND COMMITMENTS (EPIC)

Parsons Brinckerhoff Quade & Douglas, Inc.
2711 Stemmons Freeway
Suite 833
Dallas, TX 75207

SECTION XXX

DRAWN ____ DATE ____ DESIGNED ____ DATE ____
CHECKED ____ DATE ____ SCALE ____

CONTRACT NO. 0201I-PGB-06-CN-EN SHEET 1156

Plotted 07-JAN-2008 09:57

Plotted By Cam Ja

Revised: PMCT
Prepared: RJV

07-JAN-2008 09:57

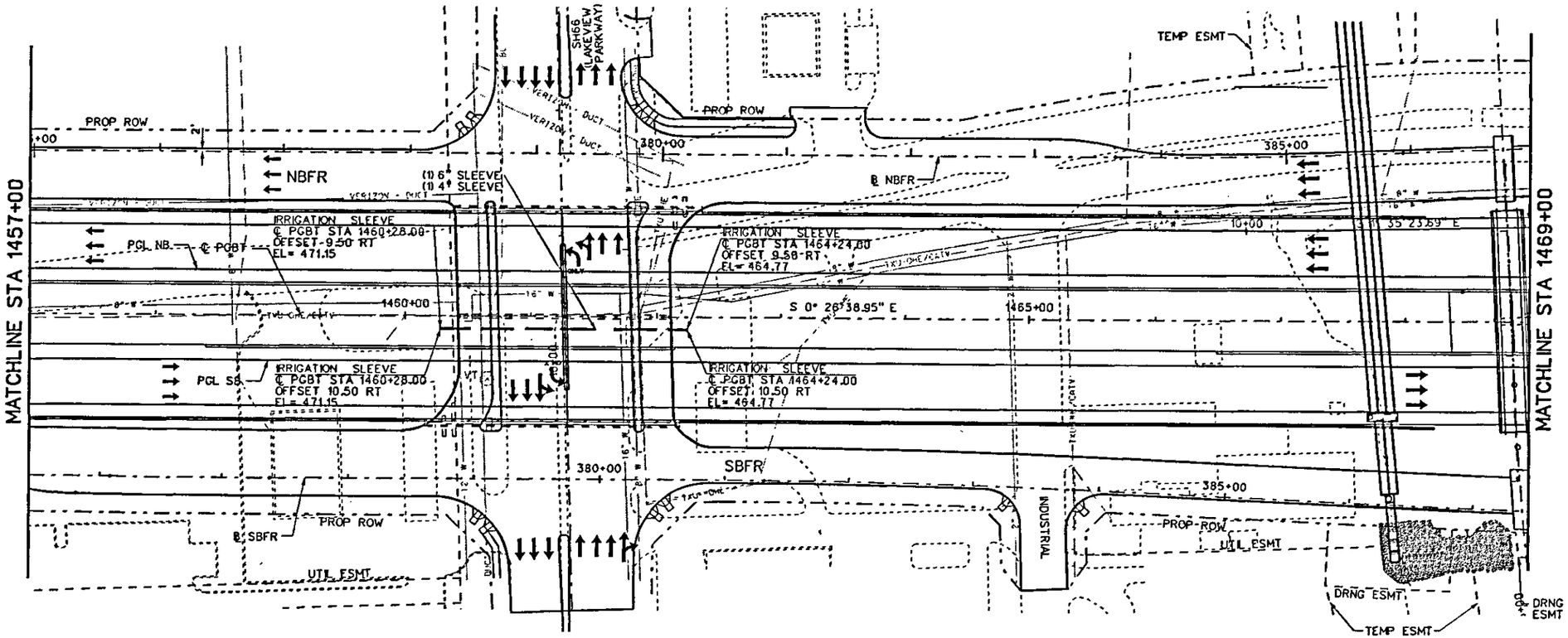

0 50 100 150 200
HORIZONTAL SCALE IN FEET

0 5 10 15 20
VERTICAL SCALE IN FEET

N

LEGEND

- RETAINING WALL
- SOUND WALL
- METAL BEAM GUARD FENCE
- TRAFFIC DIRECTION

NOTE:
SEE PAGE 1 OF 5 FOR ELEVATION DETAIL.

STATE OF TEXAS
JAMES REISER
67287
REGISTERED PROFESSIONAL ENGINEER
1-3-'08

NO.	DATE	REVISION	APPROV.

PRESIDENT GEORGE BUSH TURNPIKE

NTTA
NORTH TEXAS TOLLWAY AUTHORITY

IRRIGATON SLEEVE LAYOUT

Parsons Brinckerhoff Quade & Douglas, Inc.
2777 Stemmons Freeway
Suite 1333
LB Dallas, TX 75207

SECTION XXX

DRAWN CPS DATE 12-31-07 DESIGNED JR DATE 12-31-07
CHECKED JR DATE 12-31-07 SCALE 1"=100'

CONTRACT NO. 02011-PGB-06-CN-EN SHEET 1159

SHEET 3 OF 5

Plotted 03-JAN-2008 20:28

Plotted By mekonnen

Plotted 03-JAN-2008 20:28
DGN=gi:\Jobs\22474-PGBT\Sheets\Paving\B30g1L03.dgn, ON=(1-47, 49-62, 64)

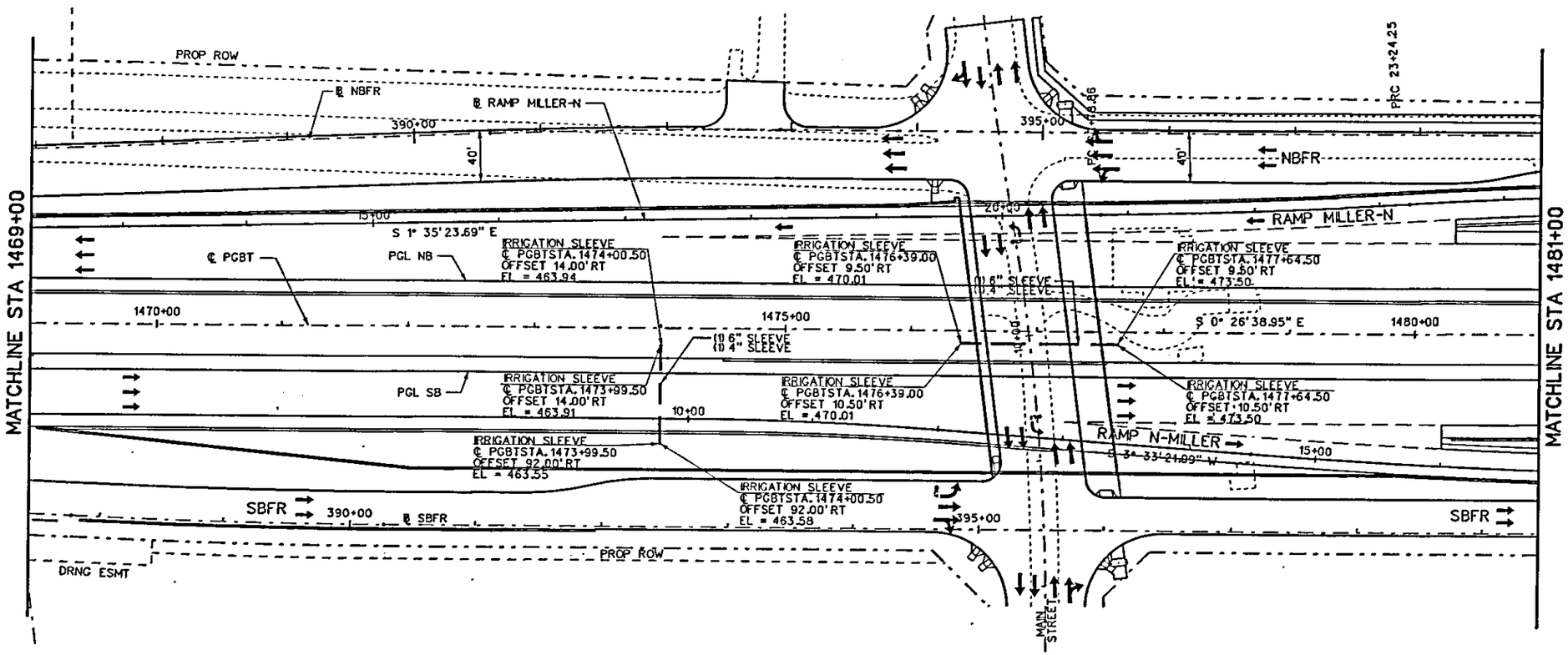

0 50 100 150 200
HORIZONTAL SCALE IN FEET

0 5 10 15 20
VERTICAL SCALE IN FEET

N

LEGEND

- RETAINING WALL
- SOUND WALL
- METAL BEAM GUARD FENCE
- TRAFFIC DIRECTION

NOTE:
SEE PAGE 1 OF 5 FOR ELEVATION DETAIL.

STATE OF TEXAS
JAMES REISER
67287
REGISTERED PROFESSIONAL ENGINEER

1-3-'08

James Reiser

NO.	DATE	REVISION	APPROV.

PRESIDENT GEORGE BUSH TURNPIKE

NTTA
NORTH TEXAS TOLLWAY AUTHORITY

IRRIGATON SLEEVE LAYOUT

Parsons Brinckerhoff Quade & Douglas, Inc.
2777 Stemmons Freeway
Suite 833
Dallas, TX 75207

SECTION XXX

DRAWN CPS DATE 12-31-07
CHECKED JR DATE 12-31-07
DESIGNED JR DATE 12-31-07
SCALE 1"=100'

CONTRACT NO. 02011-PGB-06-CN-EN SHEET 1160

SHEET 4 OF 5

Plotted 03-JAN-2008 20:07

Plotted By casper

Plotted 03-JAN-2008 20:07
DGN=g:\Jobs\22474-PGBT\Sheets\Paving\B30dIL04.dgn, ON=[1-62, 64]

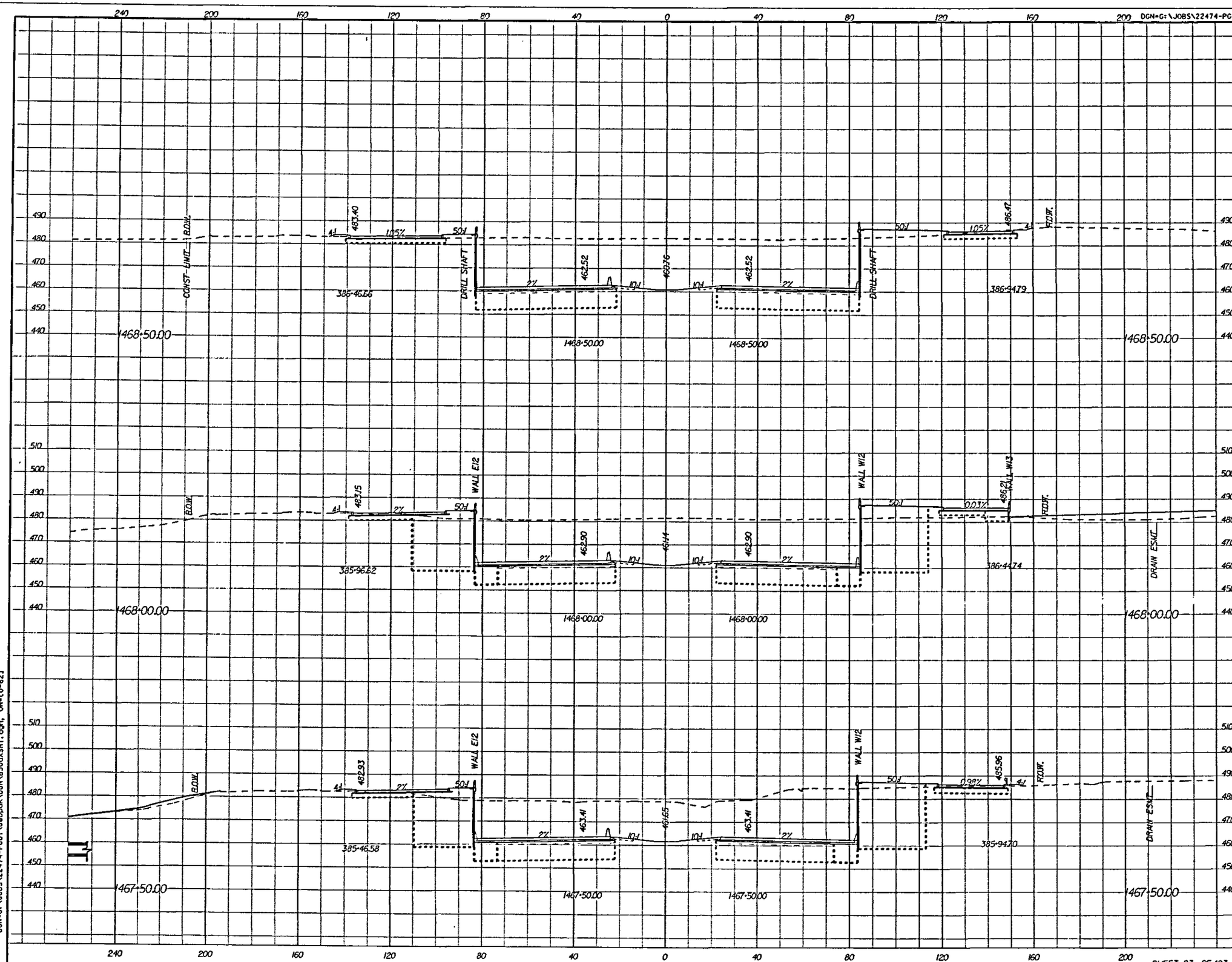

0 20 40 60 80
HORIZONTAL SCALE IN FEET

0 20 40 60 80
VERTICAL SCALE IN FEET

NO.	DATE	REVISION	APPROV.

PRESIDENT GEORGE BUSH TURNPIKE

NTTA
NORTH TEXAS TOLLWAY AUTHORITY

CROSS SECTION

Parsons Brinckerhoff Quade & Douglas, Inc.
2777 Stemmons Freeway
Suite 1533
Dallas, TX 75207

SECTION XXX

DRAWN ____ DATE ____ DESIGNED ____ DATE ____
CHECKED ____ DATE ____ SCALE ____

CONTRACT NO. 02011-PGB-06-CN-EN SHEET 1282

SHEET 83 OF 103

Plotted 04-JAN-2008 04:15
DGN=G:\JOBS\22474-PGBT\Geopak\DGN\B30aXSHT.dgn, ON=[0-62]

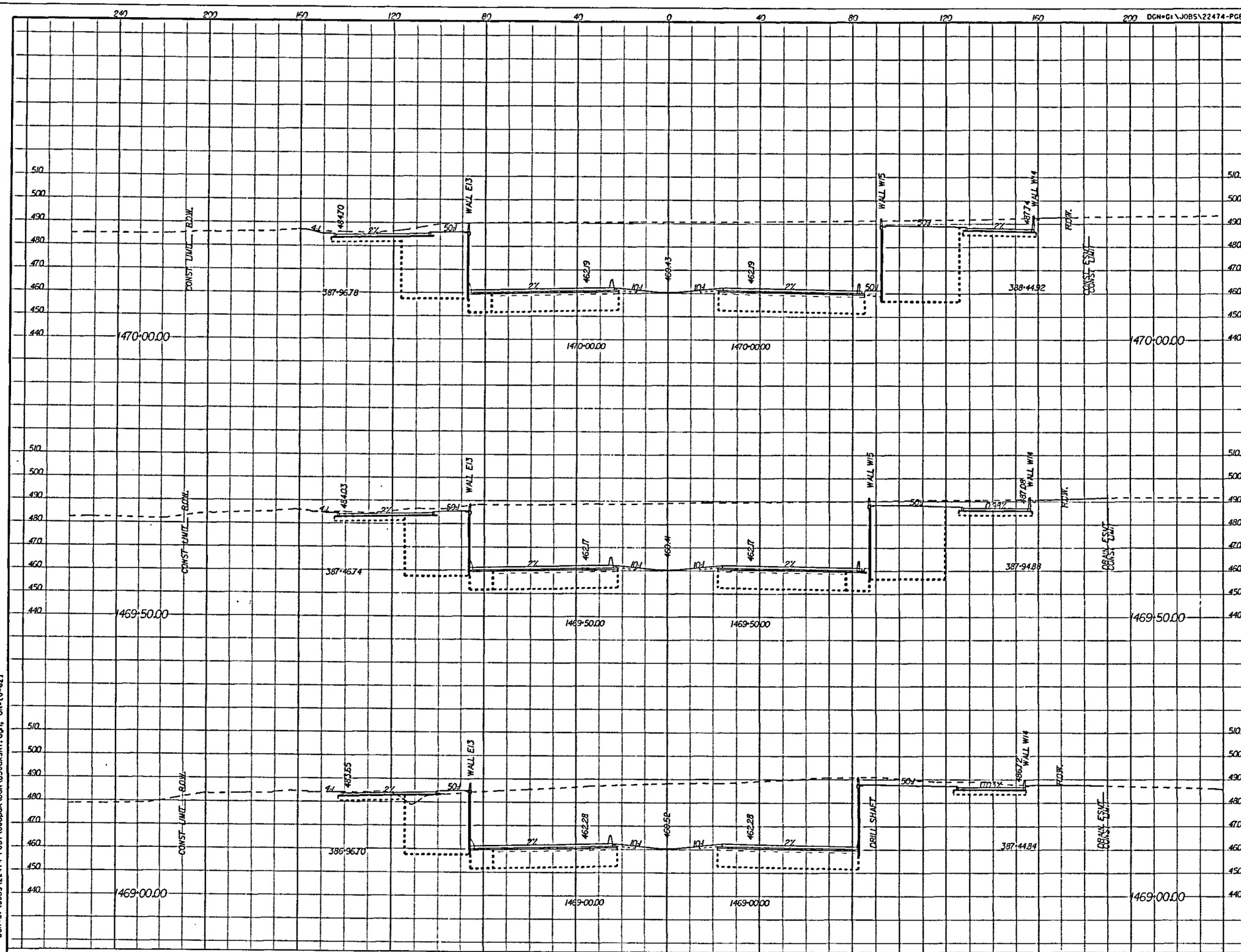

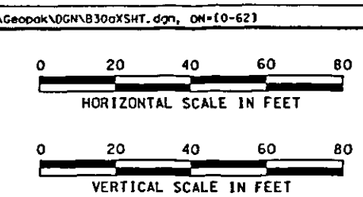

NO.	DATE	REVISION	APPROV.

PRESIDENT GEORGE BUSH TURNPIKE

NTTA
NORTH TEXAS TOLLWAY AUTHORITY

CROSS SECTION

Parsons Brinckerhoff Quade & Douglas, Inc.
5777 Sterrmons Freeway
Suite 833
Dallas, TX 75207

SECTION XXX

DRAWN ____ DATE ____ DESIGNED ____ DATE ____
CHECKED ____ DATE ____ SCALE ____

CONTRACT NO. 02011-PGB-06-CN-EN SHEET 1283

SHEET 84 OF 103

Plotted 04-JAN-2008 04:15
DGN=G:\JOBS\22474-PGBT\Geopak\DGN\B30aXSHT.dgn, ON=(0-62)

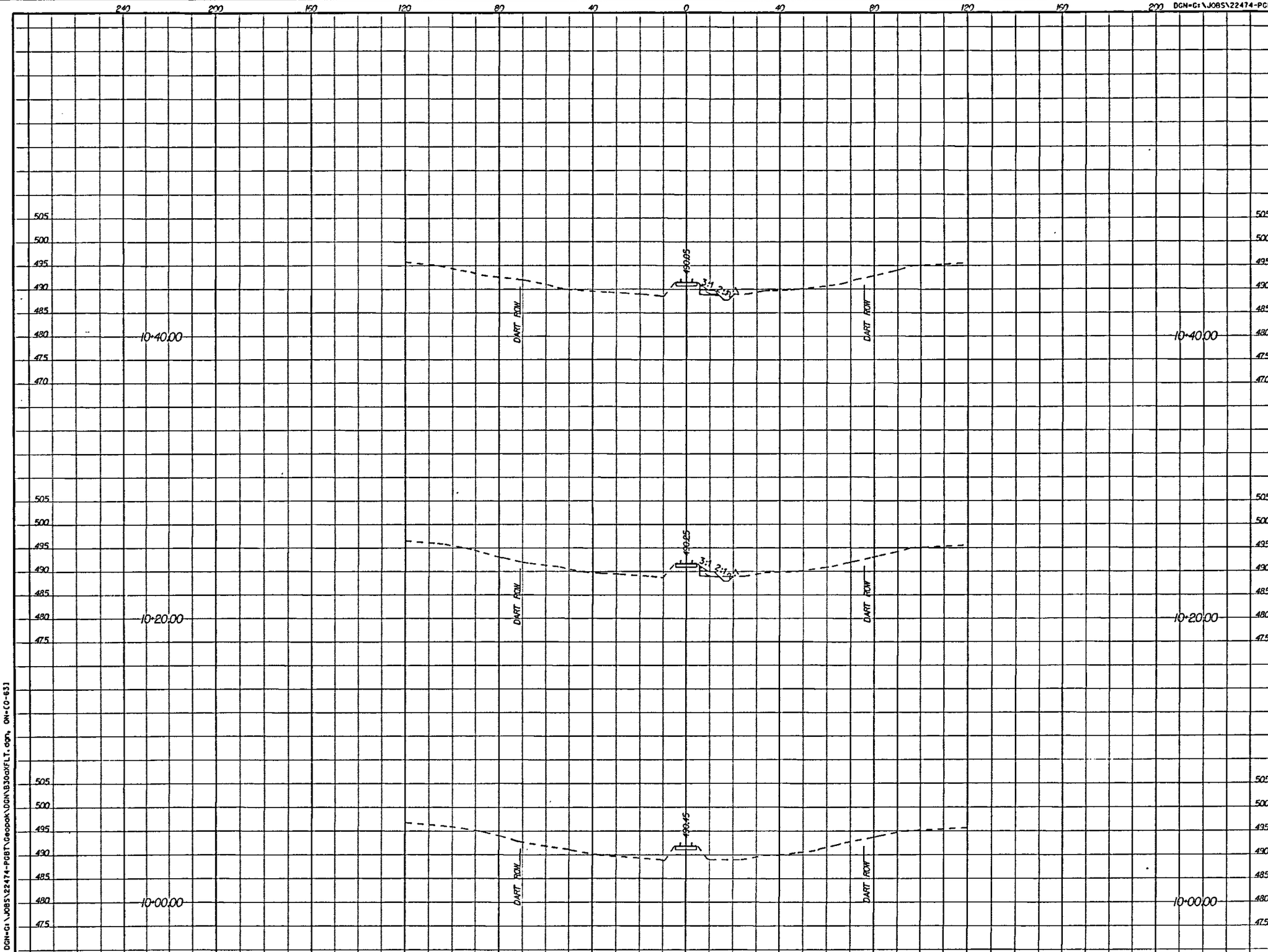

HORIZONTAL SCALE IN FEET: 0 20 40 60 80

VERTICAL SCALE IN FEET: 0 10 20 30 40

NO.	DATE	REVISION	APPROV.

PRESIDENT GEORGE BUSH TURNPIKE

NTTA
NORTH TEXAS TOLLWAY AUTHORITY

CROSS SECTION
RAILROAD

Parsons Brinckerhoff Quade & Douglas, Inc.
2777 Stemmons Freeway
Suite 1133
Dallas, TX 75207

SECTION XXX

DRAWN ____ DATE ____ DESIGNED ____ DATE ____
CHECKED ____ DATE ____ SCALE ____

CONTRACT NO. D2011-PGB-06-CN-EN SHEET 1303

SHEET 1 OF 28

Plotted 09-JAN-2008 19:22
DGN=G:\JOBS\22474-PGBT\Geopak\DGN\B30aXFLT.dgn, ON=(0-63)

DGN=G:\JOBS\22474-PGBT\Geopak\DGN\B30aXFLT.dgn, ON=[0-63]

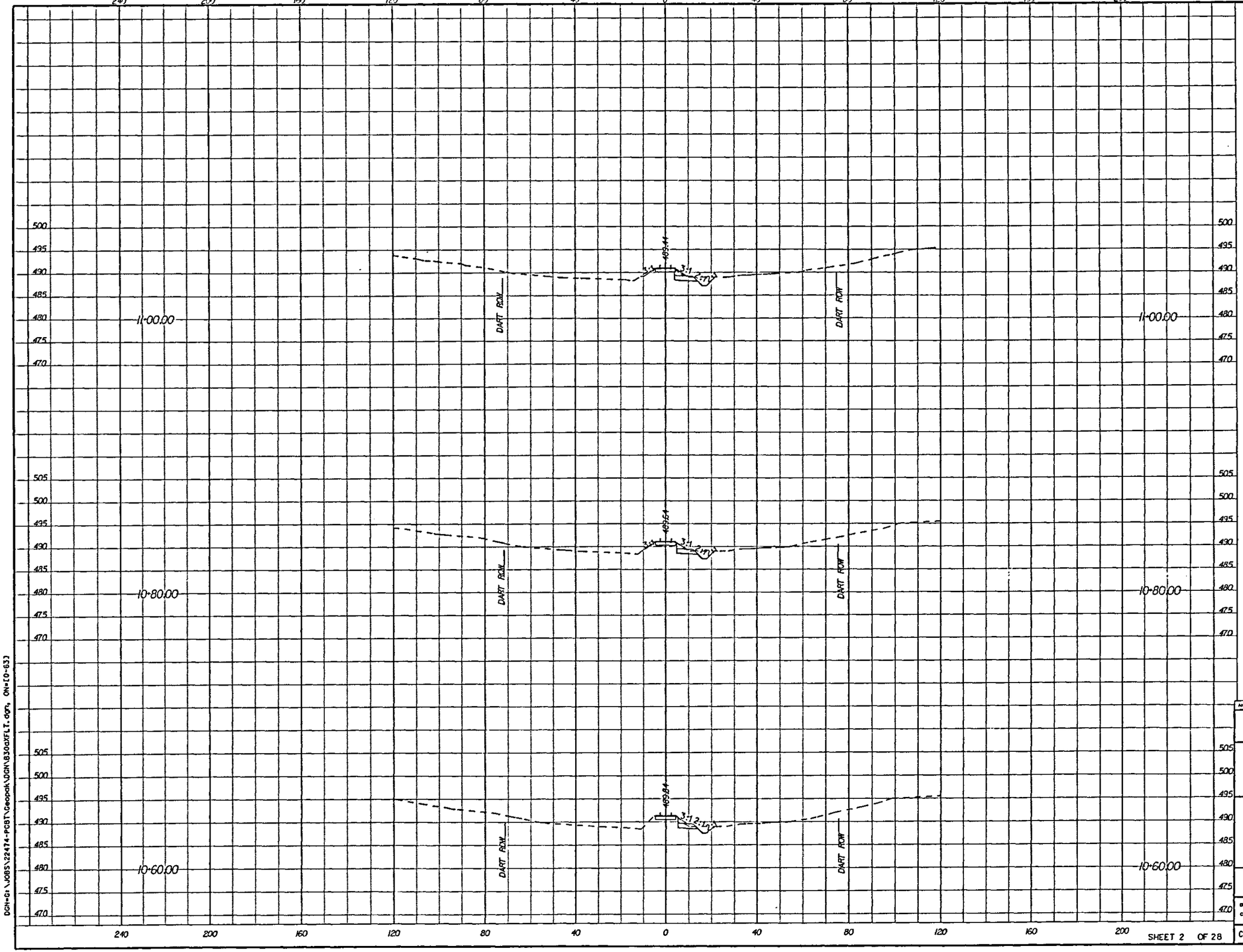

0 20 40 60 80
HORIZONTAL SCALE IN FEET

0 10 20 30 40
VERTICAL SCALE IN FEET

Plotted 09-JAN-2008 19:22
DGN=G:\JOBS\22474-PGBT\Geopak\DGN\B30aXFLT.dgn, ON=[0-63]

NO.	DATE	REVISION	APPROV.

PRESIDENT GEORGE BUSH TURNPIKE

NTTA
NORTH TEXAS TOLLWAY AUTHORITY

CROSS SECTION
RAILROAD

Parsons Brinckerhoff Quade & Douglas, Inc.
2777 Stemmons Freeway
Suite 1533
Dallas, TX 75207

SECTION XXX

DRAWN ____ DATE ____ DESIGNED ____ DATE ____
CHECKED ____ DATE ____ SCALE ____

SHEET 2 OF 28

CONTRACT NO. 02011-PGB-06-CN-EN SHEET 1304

DGN=G:\JOBS\22474-PGBT\Geopak\DGN\B30aXFLT.dgn, ON=[0-633]

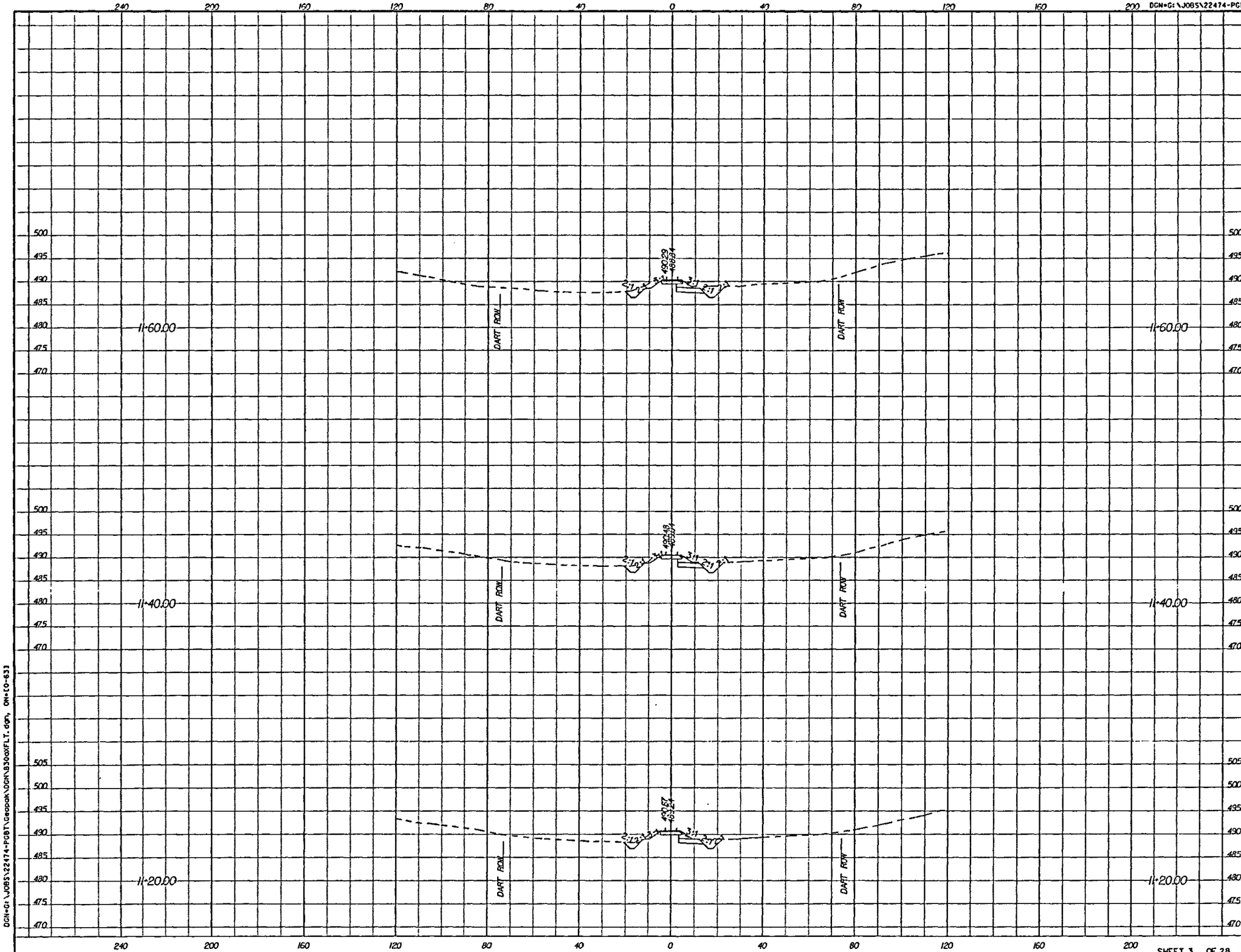

0 20 40 60 80
HORIZONTAL SCALE IN FEET

0 10 20 30 40
VERTICAL SCALE IN FEET

Plotted 09-JAN-2008 19:22
DGN=G:\JOBS\22474-PGBT\Geopak\DGN\B30aXFLT.dgn, ON=[0-633]

NO.	DATE	REVISION	APPROV.

PRESIDENT GEORGE BUSH TURNPIKE

NTTA
NORTH TEXAS TOLLWAY AUTHORITY

CROSS SECTION
RAILROAD

Parsons Brinckerhoff Quade & Douglas, Inc.
2777 Stemmons Freeway
Suite 1033
Dallas, TX 75207

SECTION XXX

DRAWN ____ DATE ____ DESIGNED ____ DATE ____
CHECKED ____ DATE ____ SCALE ____

SHEET 3 OF 28

CONTRACT NO. 02011-PGB-06-CN-EN SHEET 13D5

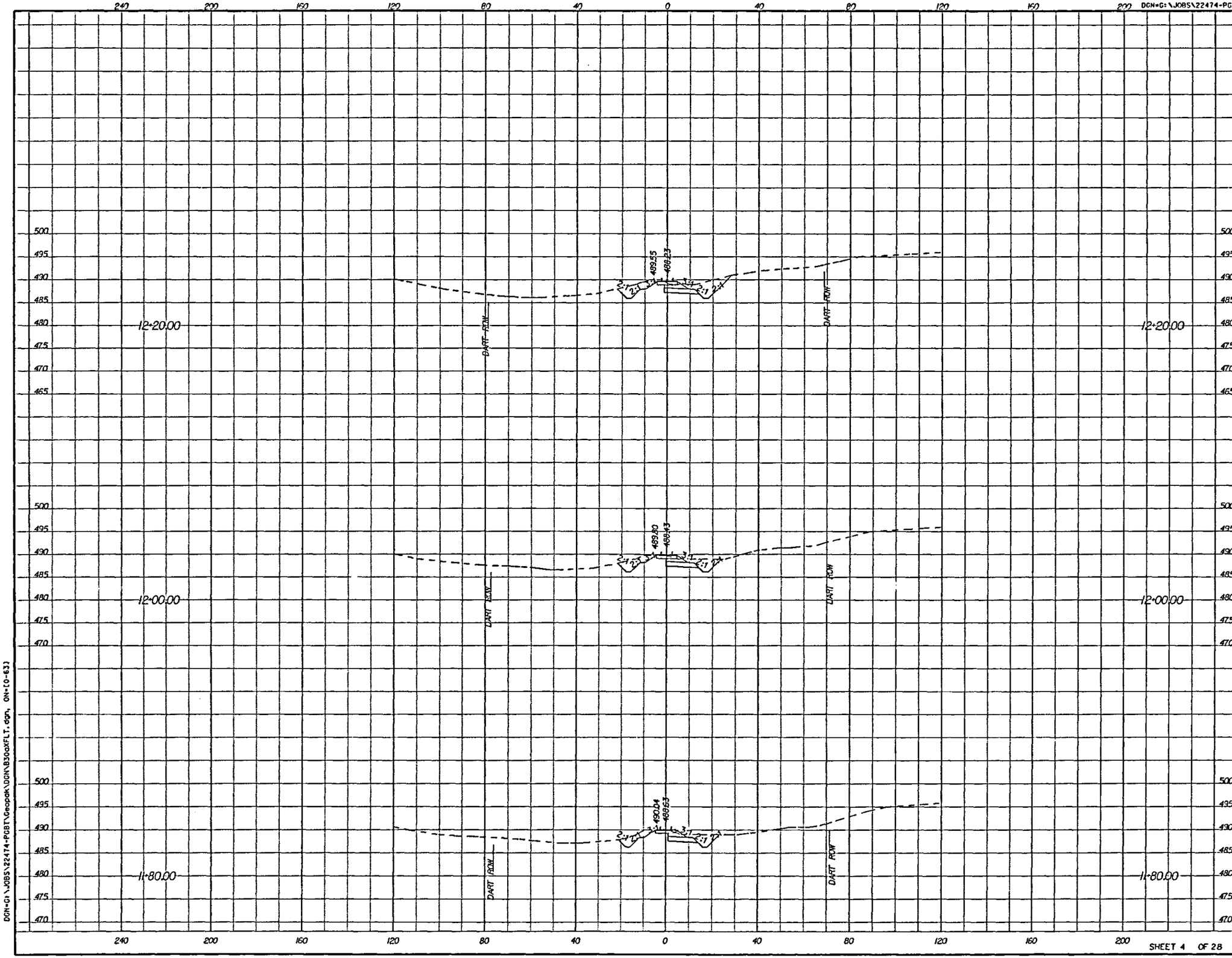

0 20 40 60 80
HORIZONTAL SCALE IN FEET

0 10 20 30 40
VERTICAL SCALE IN FEET

NO.	DATE	REVISION	APPROV.

PRESIDENT GEORGE BUSH TURNPIKE

NTTA
NORTH TEXAS TOLLWAY AUTHORITY

CROSS SECTION
RAILROAD

Parsons Brinckerhoff Quade & Douglas, Inc.
2777 Stemmons Freeway
Suite 1033
Dallas, TX 75207

SECTION XXX

DRAWN ____ DATE ____ DESIGNED ____ DATE ____
CHECKED ____ DATE ____ SCALE ____

CONTRACT NO. 02011-PGB-06-CN-EN SHEET 1306

SHEET 4 OF 28

Plotted 09-JAN-2008 19:22
DGN=G:\JOBS\22474-PGBT\Geopak\DGN\B30aXFLT.dgn, ON=[0-63]

DGN=G:\JOBS\22474-PGBT\Geopak\DGN\B30aXFLT.dgn, ON=[0-63]

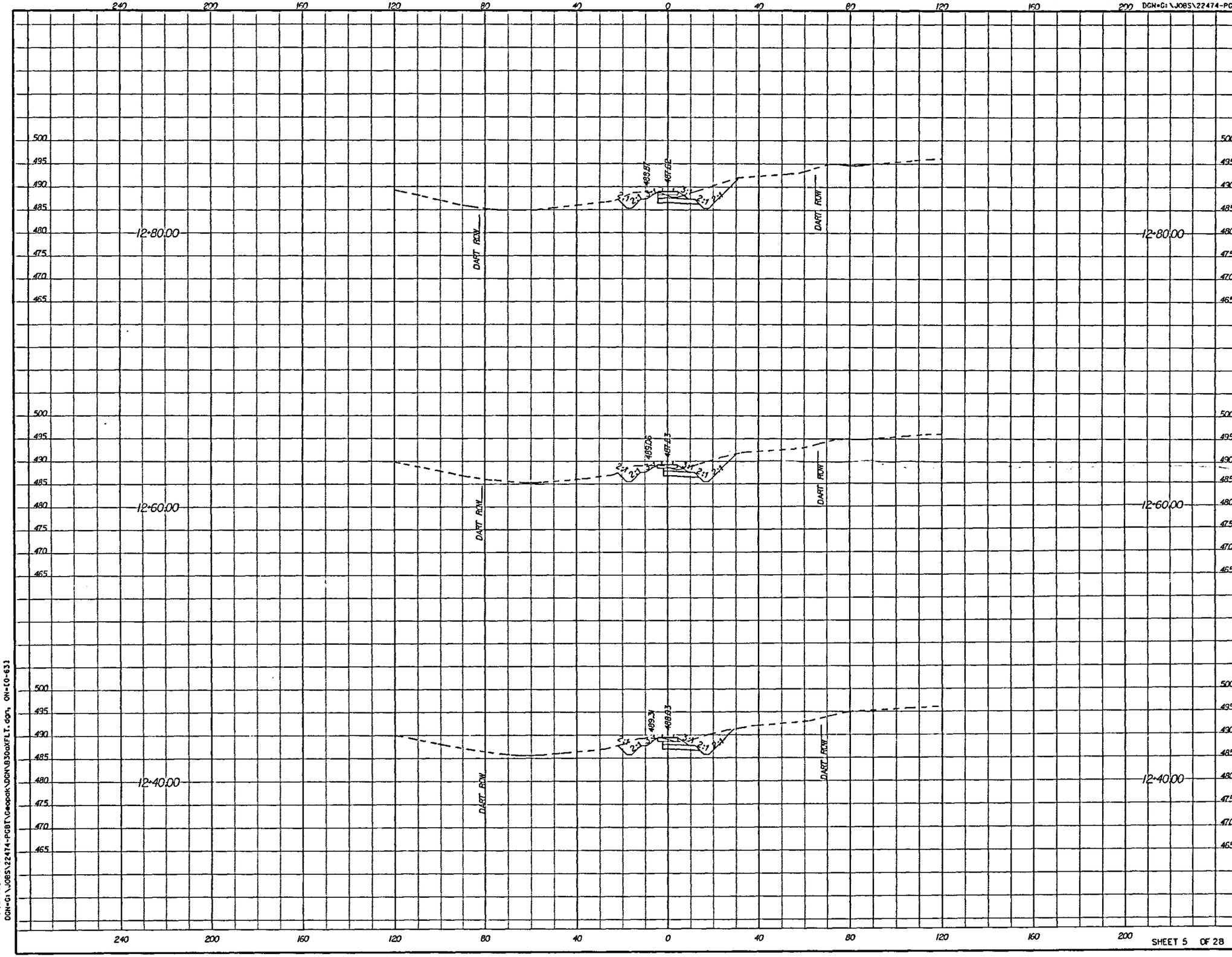

0 20 40 60 80
HORIZONTAL SCALE IN FEET

0 10 20 30 40
VERTICAL SCALE IN FEET

Plotted 09-JAN-2008 19:22
DGN=G:\JOBS\22474-PGBT\Geopak\DGN\B30aXFLT.dgn, ON=[0-63]

NO.	DATE	REVISION	APPROV.

PRESIDENT GEORGE BUSH TURNPIKE

NTTA
NORTH TEXAS TOLLWAY AUTHORITY

CROSS SECTION
RAILROAD

Parsons Brinckerhoff Quade & Douglas, Inc.
2777 Stemmons Freeway
Suite 1333
Dallas, TX 75207

SECTION XXX

DRAWN ____ DATE ____ DESIGNED ____ DATE ____
CHECKED ____ DATE ____ SCALE ____

CONTRACT NO. 02011-PGB-06-CN-EN SHEET 1307

SHEET 5 OF 28

0 20 40 60 80
HORIZONTAL SCALE IN FEET

0 10 20 30 40
VERTICAL SCALE IN FEET

Plotted 09-JAN-2008 19:22
DGN=G:\JOBS\22474-PGBT\Geopak\DGN\B30aXFLT.dgn, ON=(0-63)

NO.	DATE	REVISION	APPROV.

PRESIDENT GEORGE BUSH TURNPIKE

NTTA
NORTH TEXAS TOLLWAY AUTHORITY

CROSS SECTION
RAILROAD

Parsons Brinckerhoff Quade & Douglas, Inc.
2711 Stemmons Freeway
Suite 833
Dallas, TX 75207

SECTION XXX

DRAWN ____ DATE ____ DESIGNED ____ DATE ____
CHECKED ____ DATE ____ SCALE ____

SHEET 6 OF 28

CONTRACT NO. 02011-PGB-06-CN-EN SHEET 1308

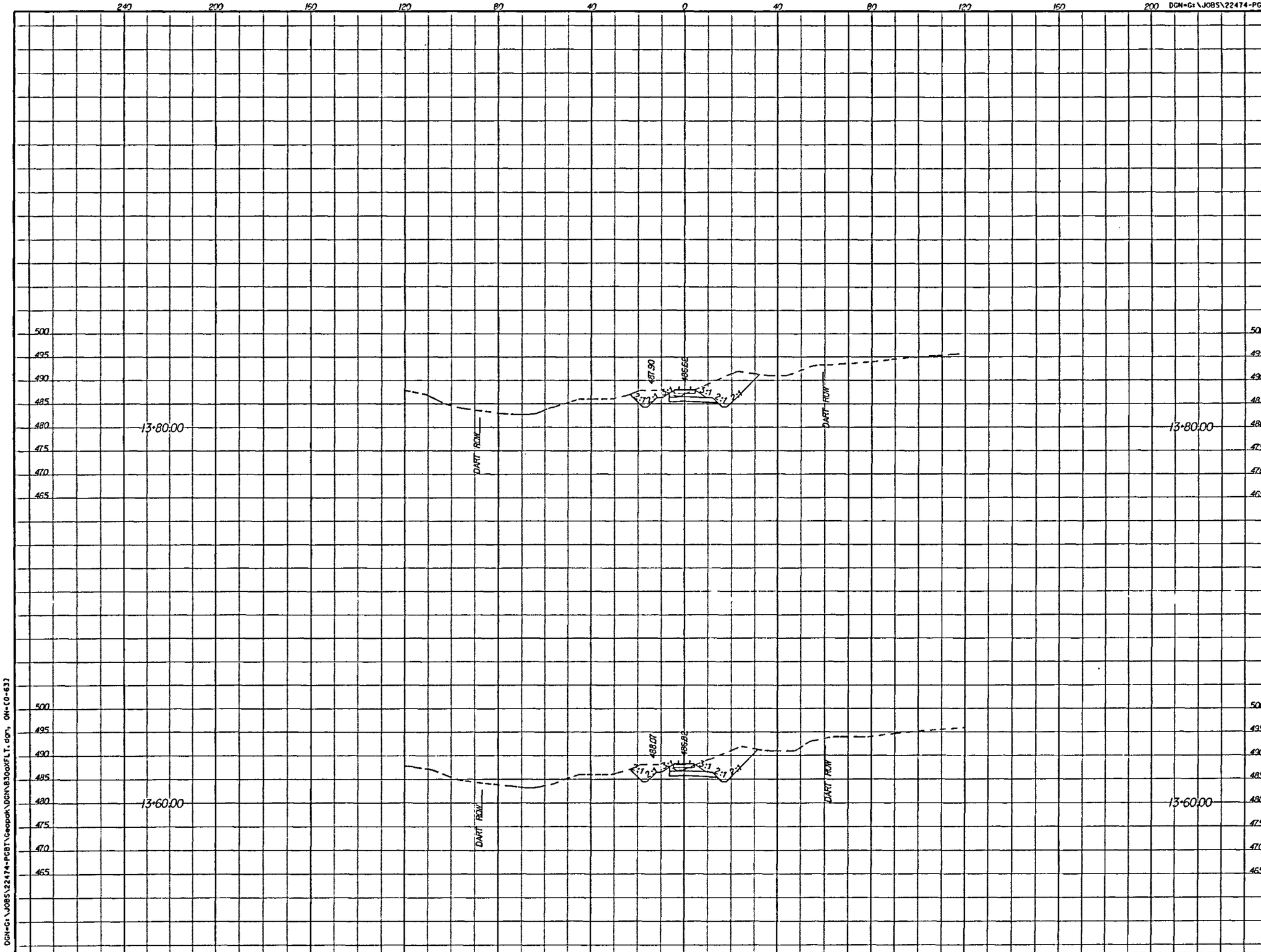

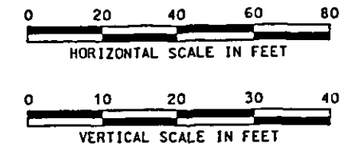

NO.	DATE	REVISION	APPROV.

PRESIDENT GEORGE BUSH TURNPIKE

NTTA
NORTH TEXAS TOLLWAY AUTHORITY

CROSS SECTION
RAILROAD

PB Parsons Brinckerhoff Quade & Douglas, Inc.
2777 Stemmons Freeway
Suite 833
Dallas, TX 75207

SECTION XXX

DRAWN ____ DATE ____ DESIGNED ____ DATE ____
CHECKED ____ DATE ____ SCALE ____

SHEET 7 OF 28

CONTRACT NO. 02011-PGB-06-CN-EN SHEET 1309

Plotted 09-JAN-2008 19:22
DGN=G:\JOBS\22474-PGBT\Geopak\DGN\B30aXFLT.dgn, ON=[0-63]

0 20 40 60 80
HORIZONTAL SCALE IN FEET

0 10 20 30 40
VERTICAL SCALE IN FEET

NO.	DATE	REVISION	APPROV.

PRESIDENT GEORGE BUSH TURNPIKE

NTTA
NORTH TEXAS TOLLWAY AUTHORITY

CROSS SECTION
RAILROAD

Parsons Brinckerhoff Quade & Douglas, Inc.
2777 Stemmons Freeway
Suite 833
Dallas, TX 75207

SECTION XXX

DRAWN ____ DATE ____ DESIGNED ____ DATE ____
CHECKED ____ DATE ____ SCALE ____

CONTRACT NO. 02011-PGB-06-CN-EN SHEET 13A0

SHEET 8 OF 28

Plotted 09-JAN-2008 19:22
DGN=G:\JOBS\22474-PGBT\Geopak\DGN\B30aXFLT.dgn, ON=[0-63]

DGN=G:\JOBS\22474-PGBT\Geopak\DGN\B30aXFLT.dgn, ON=[0-633]

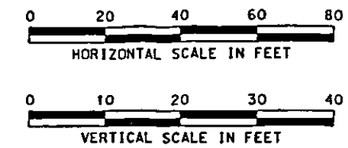

Plotted 09-JAN-2008 19:22
DGN=G:\JOBS\22474-PGBT\Geopak\DGN\B30aXFLT.dgn, ON=[0-633]

NO.	DATE	REVISION	APPROV.

PRESIDENT GEORGE BUSH TURNPIKE

NTTA
NORTH TEXAS TOLLWAY AUTHORITY

CROSS SECTION
RAILROAD

Parsons Brinckerhoff Quade & Douglas, Inc.
2777 Stemmons Freeway
Suite 1033
Dallas, TX 75207

SECTION XXX

DRAWN ____ DATE ____ DESIGNED ____ DATE ____
CHECKED ____ DATE ____ SCALE ____

CONTRACT NO. 02011-PGB-06-CN-EN SHEET 131

SHEET 9 OF 28

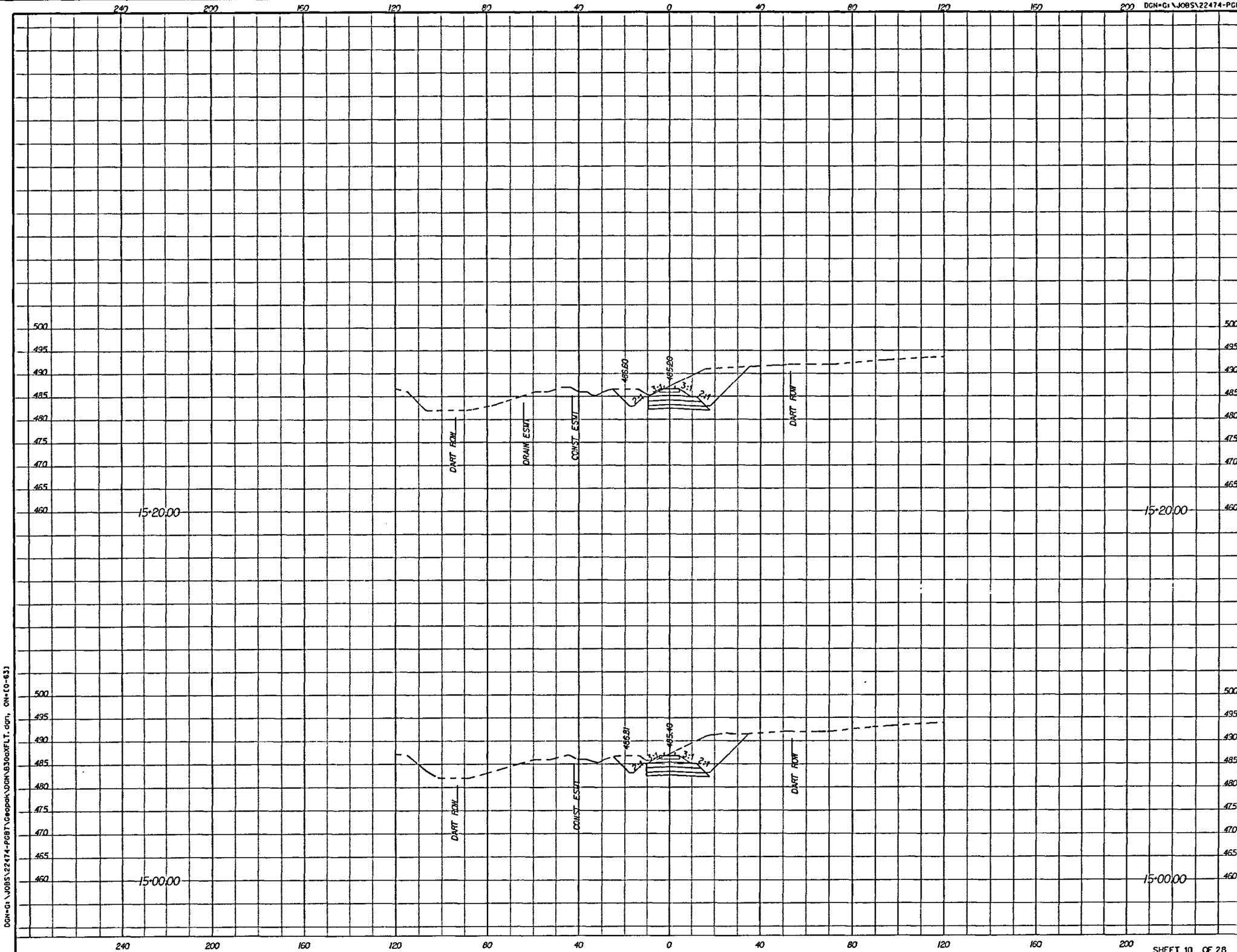

0 20 40 60 80
HORIZONTAL SCALE IN FEET

0 10 20 30 40
VERTICAL SCALE IN FEET

NO.	DATE	REVISION	APPROV.

PRESIDENT GEORGE BUSH TURNPIKE

NTTA
NORTH TEXAS TOLLWAY AUTHORITY

CROSS SECTION
RAILROAD

Parsons Brinckerhoff Quade & Douglas, Inc.
2777 Stemmons Freeway
Suite 1333
Dallas, TX 75207

SECTION XXX

DRAWN ____ DATE ____ DESIGNED ____ DATE ____
CHECKED ____ DATE ____ SCALE ____

CONTRACT NO. 02011-PGB-06-CN-EN SHEET 13 of 2

SHEET 10 OF 28

Plotted 09-JAN-2008 19:22
DGN=G:\JOBS\22474-PGBT\Geopak\DGN\B30aXFLT.dgn, ON=[0-63]

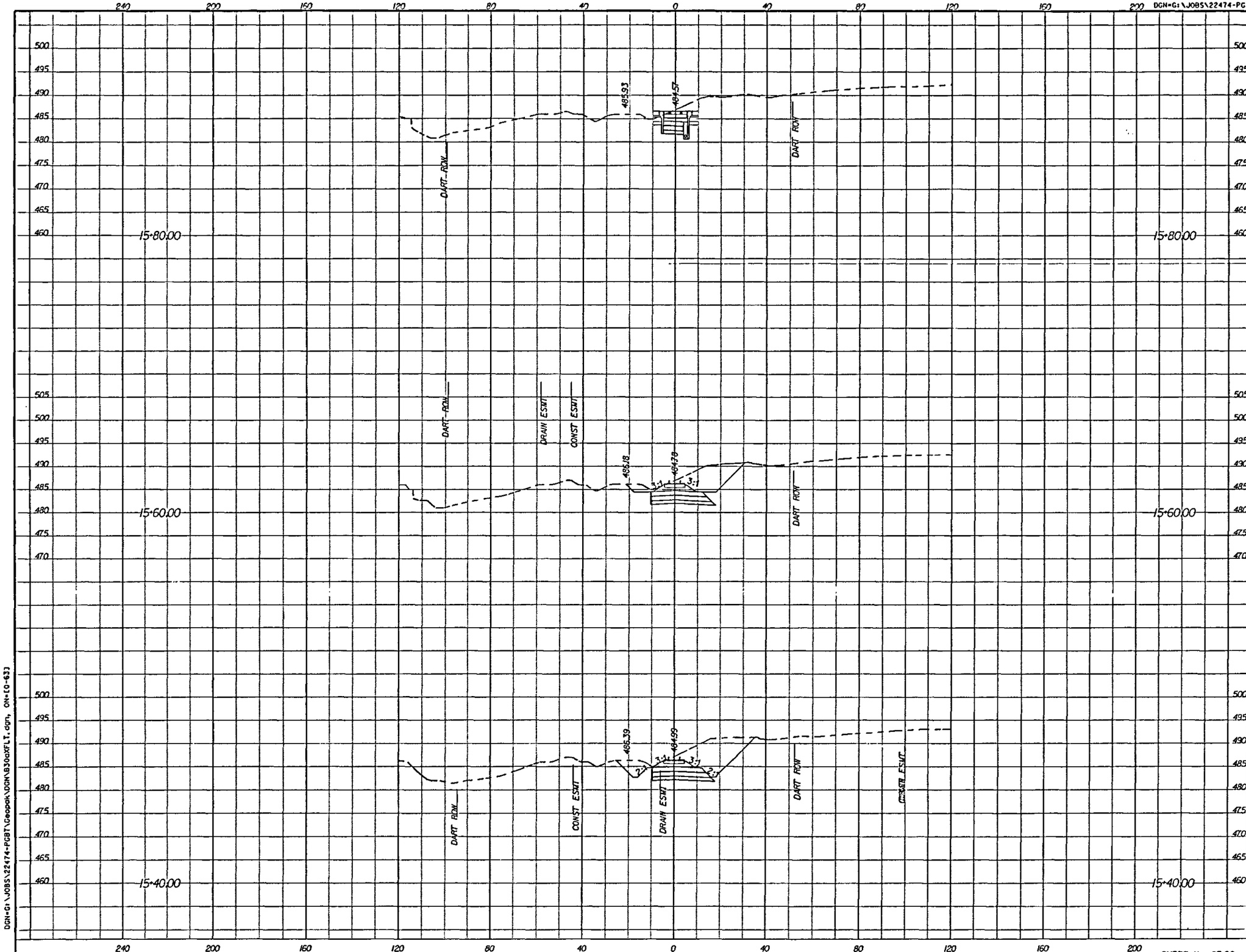

0 20 40 60 80
HORIZONTAL SCALE IN FEET

0 10 20 30 40
VERTICAL SCALE IN FEET

NO.	DATE	REVISION	APPROV.

PRESIDENT GEORGE BUSH TURNPIKE

NTTA
NORTH TEXAS TOLLWAY AUTHORITY

CROSS SECTION
RAILROAD

Parsons Brinckerhoff Quade & Douglas, Inc.
2777 Stemmons Freeway
Suite 833
Dallas, TX 75207

SECTION XXX

DRAWN _____ DATE _____ DESIGNED _____ DATE _____
CHECKED _____ DATE _____ SCALE _____

CONTRACT NO. 02011-PGB-06-CN-EN SHEET 13/13

SHEET 11 OF 28

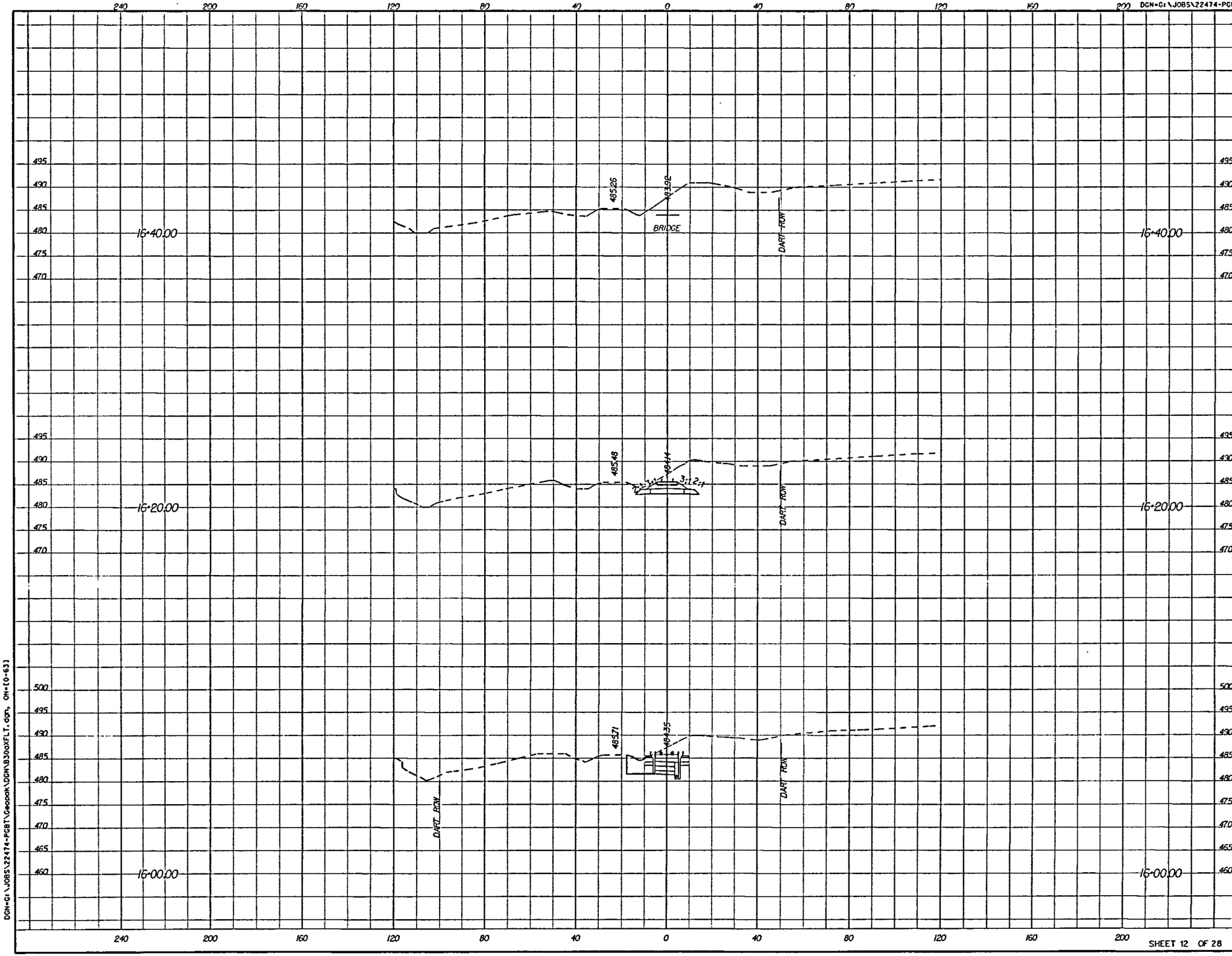

0 20 40 60 80
HORIZONTAL SCALE IN FEET

0 10 20 30 40
VERTICAL SCALE IN FEET

NO.	DATE	REVISION	APPROV.

PRESIDENT GEORGE BUSH TURNPIKE

NTTA
NORTH TEXAS TOLLWAY AUTHORITY

CROSS SECTION
RAILROAD

Parsons Brinckerhoff Quade & Douglas, Inc.
2777 Stemmons Freeway
Suite 1033
Dallas, TX 75207

SECTION XXX

DRAWN ____ DATE ____ DESIGNED ____ DATE ____
CHECKED ____ DATE ____ SCALE ____

CONTRACT NO. 02011-PGB-06-CN-EN SHEET 13/14

SHEET 12 OF 28

Plotted 09-JAN-2008 19:22
DGN=G:\JOBS\22474-PGBT\Geopak\DGN\B30aXFLT.dgn, ON=[0-63]

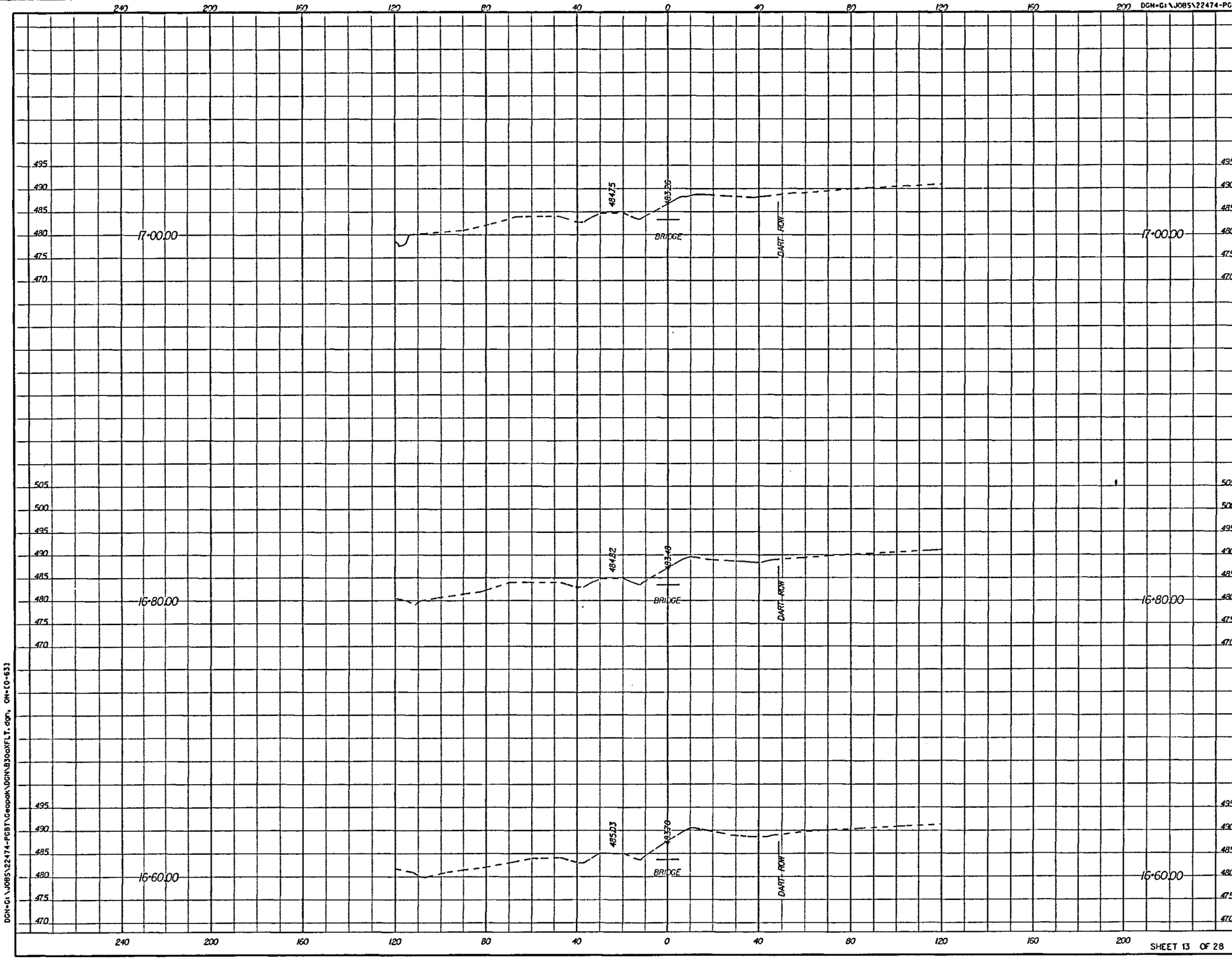

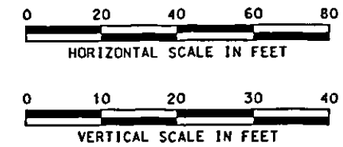

NO.	DATE	REVISION	APPROV.

PRESIDENT GEORGE BUSH TURNPIKE

NTTA
NORTH TEXAS TOLLWAY AUTHORITY

CROSS SECTION
RAILROAD

Parsons Brinckerhoff Quade & Douglas, Inc.
2777 Stemmons Freeway
Suite 1033
Dallas, TX 75207

SECTION XXX

DRAWN ____ DATE ____ DESIGNED ____ DATE ____
CHECKED ____ DATE ____ SCALE ____

CONTRACT NO. 02011-PGB-06-CN-EN SHEET 13 OF 5

SHEET 13 OF 28

Plotted 09-JAN-2008 19:22
DGN=G:\JOBS\22474-PGBT\Geopak\DGN\B30aXFLT.dgn, ON=[0-63]

DGN=G:\JOBS\22474-PGBT\Geopak\DGN\B30aXFLT.dgn, ON=[0-63]

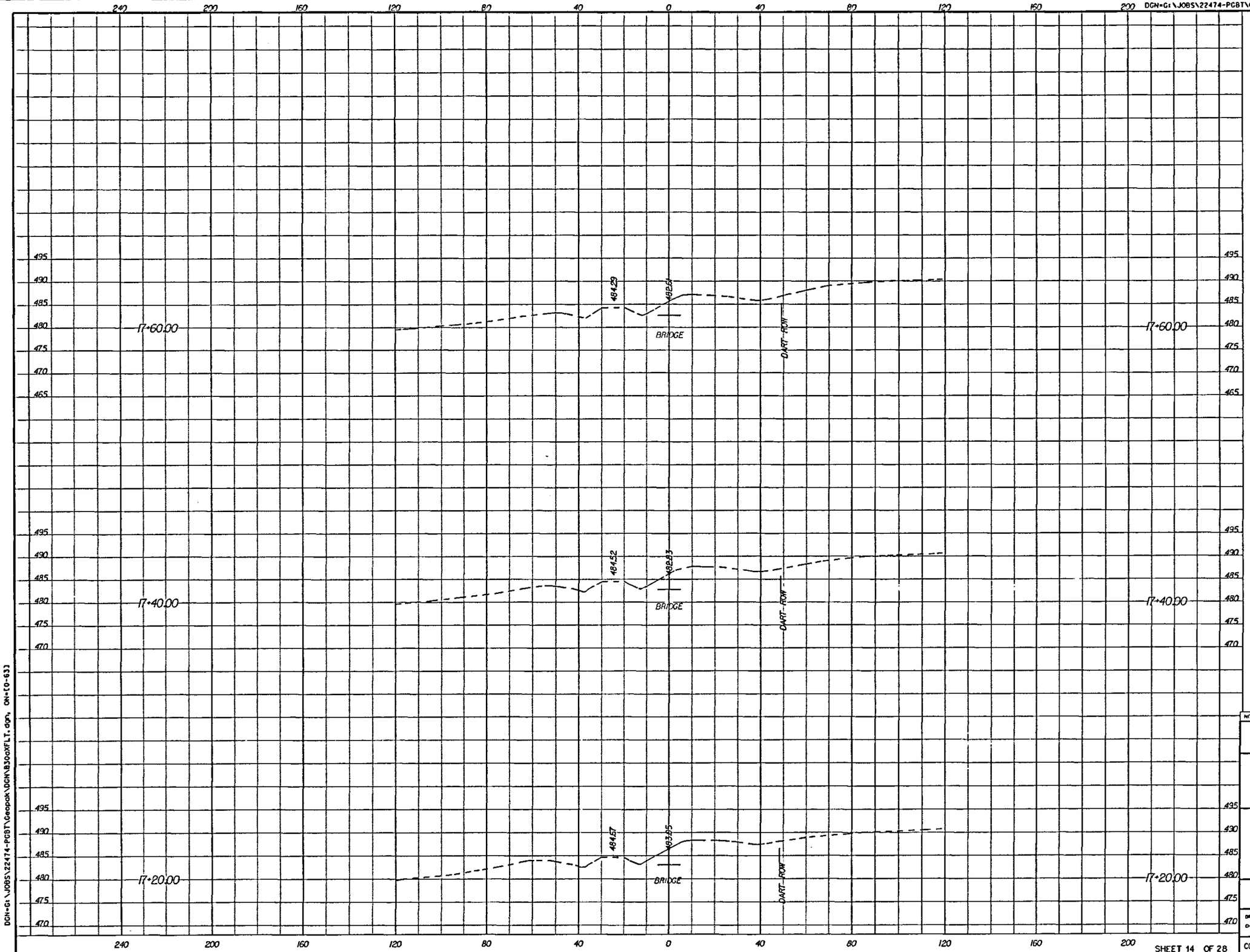

0 20 40 60 80
HORIZONTAL SCALE IN FEET

0 10 20 30 40
VERTICAL SCALE IN FEET

NO.	DATE	REVISION	APPROV.

PRESIDENT GEORGE BUSH TURNPIKE

NTTA
NORTH TEXAS TOLLWAY AUTHORITY

CROSS SECTION
RAILROAD

Parsons Brinckerhoff Quade & Douglas, Inc.
2777 Stemmons Freeway
Suite 613
Dallas, TX 75207

SECTION XXX

DRAWN ____ DATE ____ DESIGNED ____ DATE ____
CHECKED ____ DATE ____ SCALE ____

CONTRACT NO. 02011-PGB-06-CN-EN SHEET 13/16

SHEET 14 OF 28

Plotted 09-JAN-2008 19:22
DGN=G:\JOBS\22474-PGBT\Geopak\DGN\B30aXFLT.dgn, ON=[0-63]

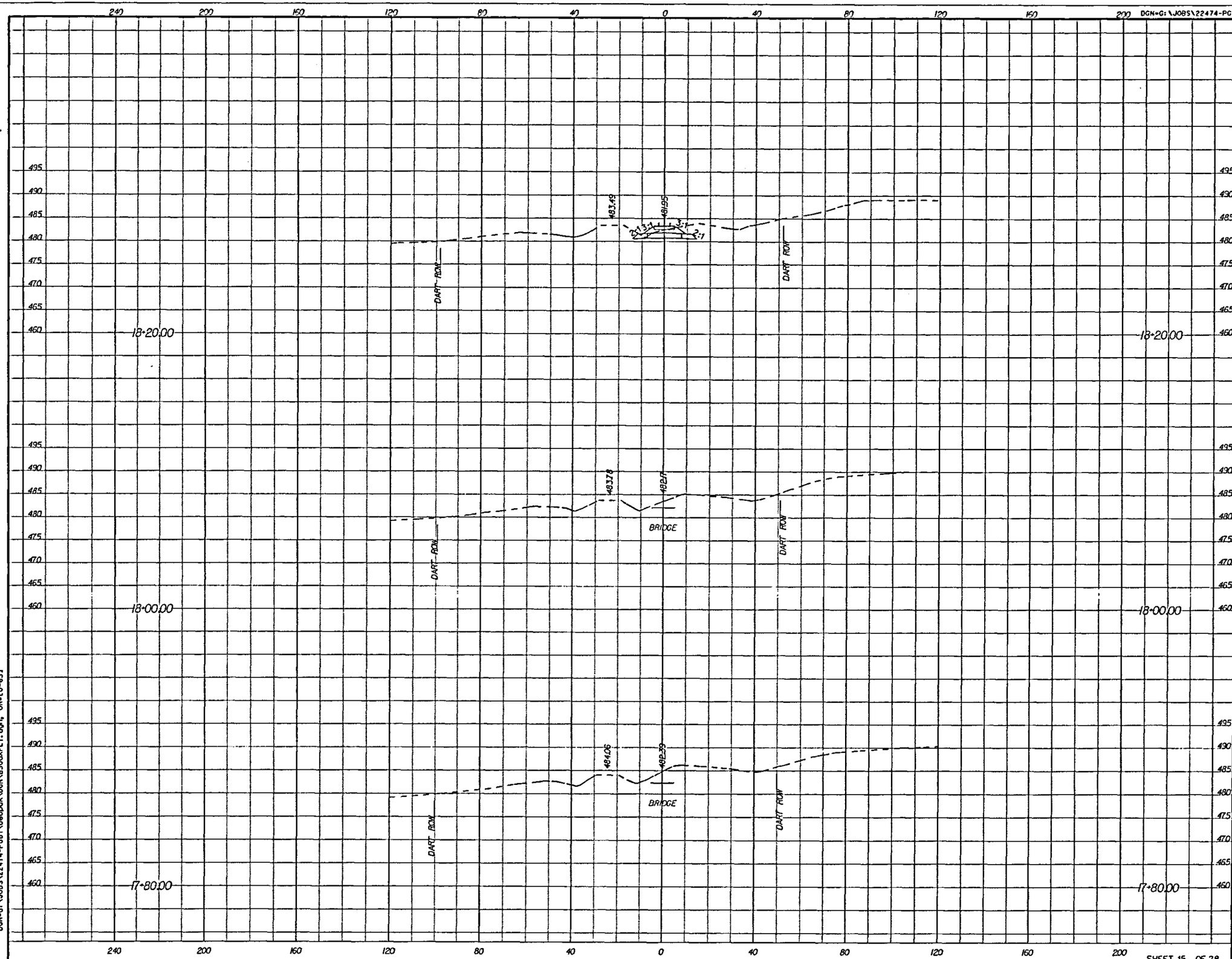

0 20 40 60 80
HORIZONTAL SCALE IN FEET

0 10 20 30 40
VERTICAL SCALE IN FEET

NO.	DATE	REVISION	APPROV.

PRESIDENT GEORGE BUSH TURNPIKE

NTTA
NORTH TEXAS TOLLWAY AUTHORITY

CROSS SECTION
RAILROAD

Parsons Brinckerhoff Quade & Douglas, Inc.
2777 Stemmons Freeway
Suite 1033
Dallas, TX 75207

SECTION XXX

DRAWN ____ DATE ____ DESIGNED ____ DATE ____
CHECKED ____ DATE ____ SCALE ____

CONTRACT NO. 02011-PGB-06-CN-EN SHEET 13/17

SHEET 15 OF 28

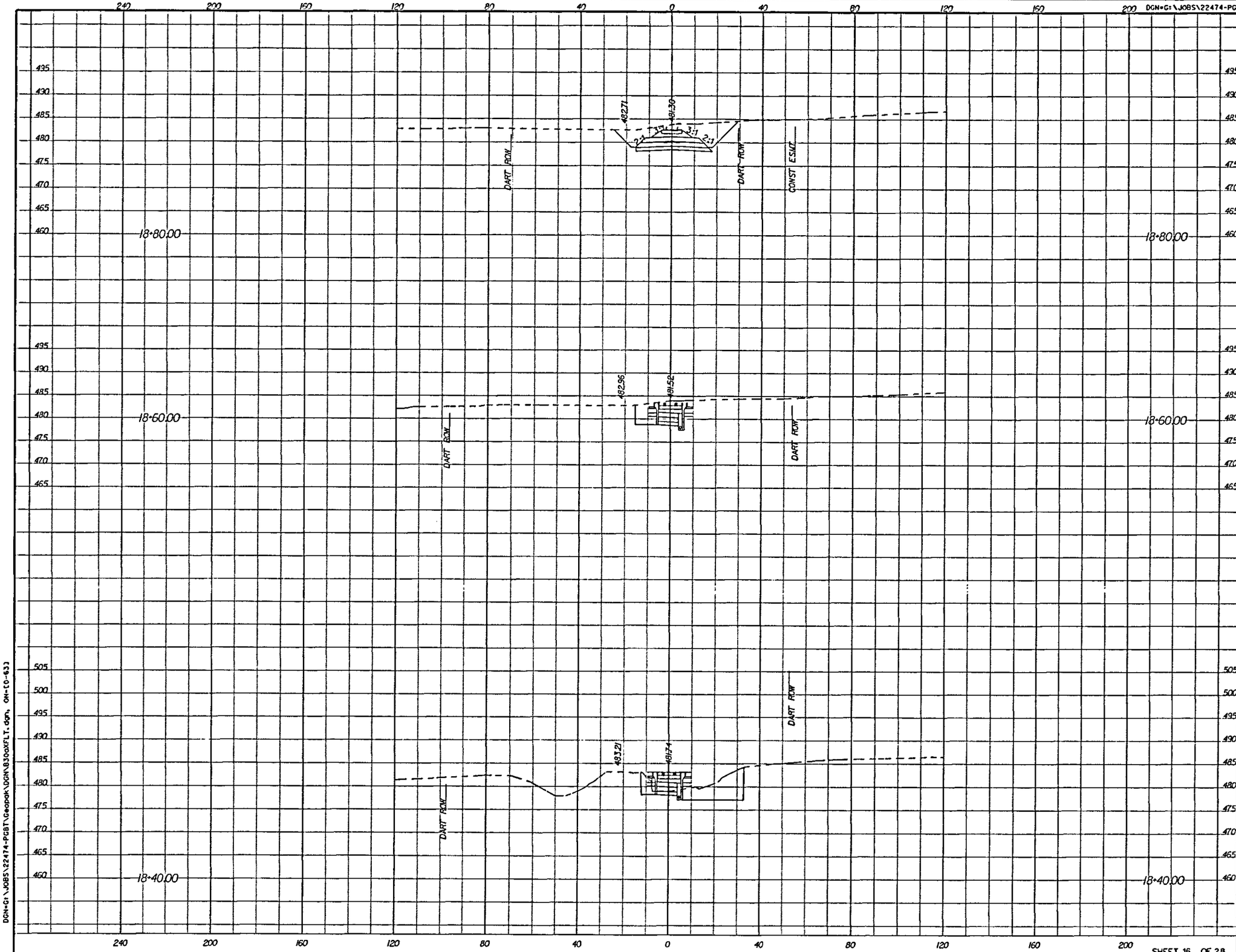

0 20 40 60 80
HORIZONTAL SCALE IN FEET

0 10 20 30 40
VERTICAL SCALE IN FEET

NO.	DATE	REVISION	APPROV.

PRESIDENT GEORGE BUSH TURNPIKE

NTTA
NORTH TEXAS TOLLWAY AUTHORITY

CROSS SECTION
RAILROAD

Parsons Brinckerhoff Quade & Douglas, Inc.
2777 Stemmons Freeway
Suite 1533
Dallas, TX 75207

SECTION XXX

DRAWN ____ DATE ____ DESIGNED ____ DATE ____
CHECKED ____ DATE ____ SCALE ____

CONTRACT NO. 02011-PGB-06-CN-EN SHEET 1318

SHEET 16 OF 28

Plotted 09-JAN-2008 19:23
DGN=G:\JOBS\22474-PGBT\Geopak\DGN\B30aXFLT.dgn, ON=(0-63)

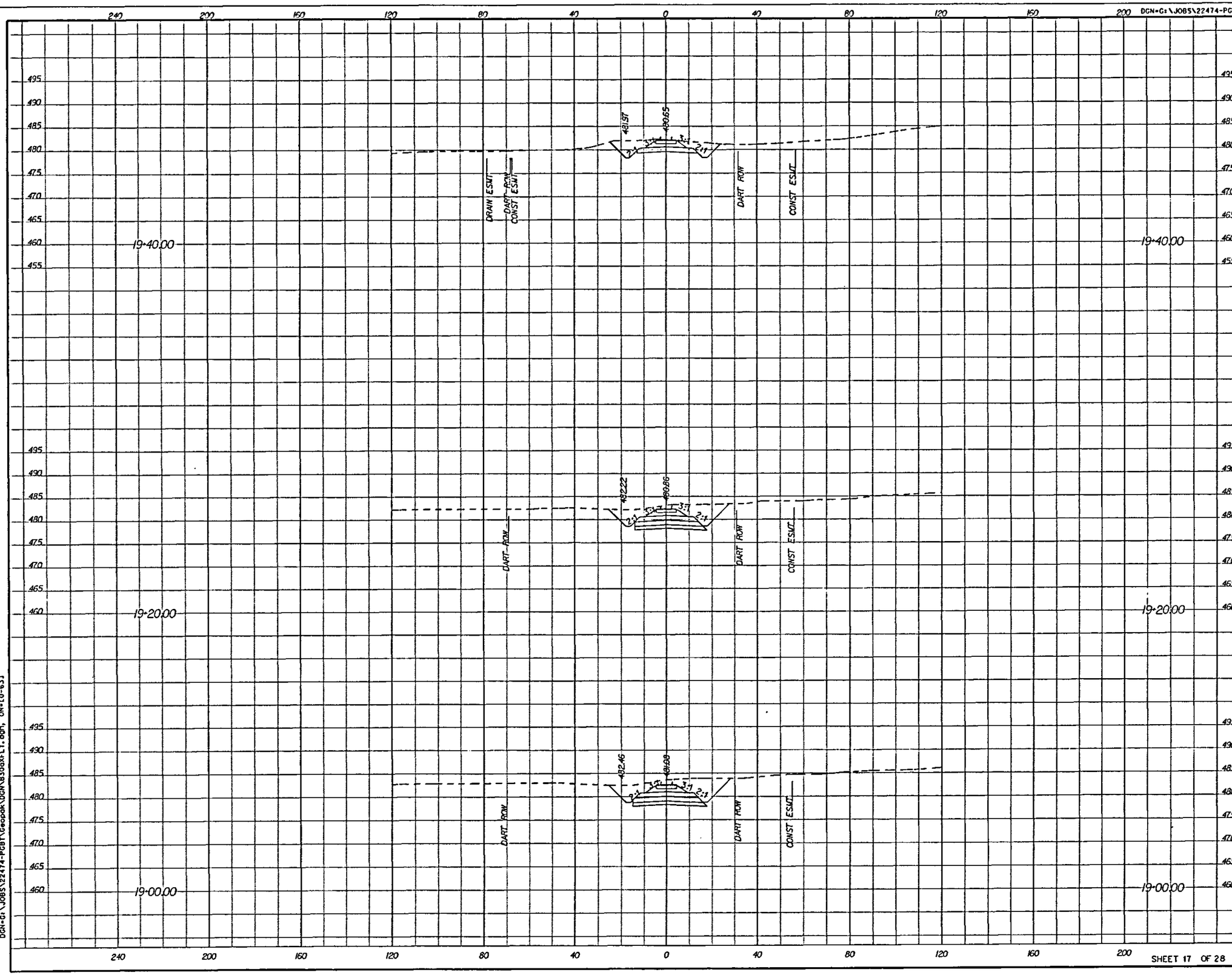

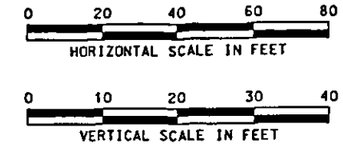

NO.	DATE	REVISION	APPROV.

PRESIDENT GEORGE BUSH TURNPIKE

NTTA
NORTH TEXAS TOLLWAY AUTHORITY

CROSS SECTION
RAILROAD

Parsons Brinckerhoff Quade & Douglas, Inc.
2777 Stemmons Freeway
Suite 833
Dallas, TX 75207

SECTION XXX

DRAWN ____ DATE ____ DESIGNED ____ DATE ____
CHECKED ____ DATE ____ SCALE ____

CONTRACT NO. 02011-PGB-06-CN-EN SHEET 1319

SHEET 17 OF 28

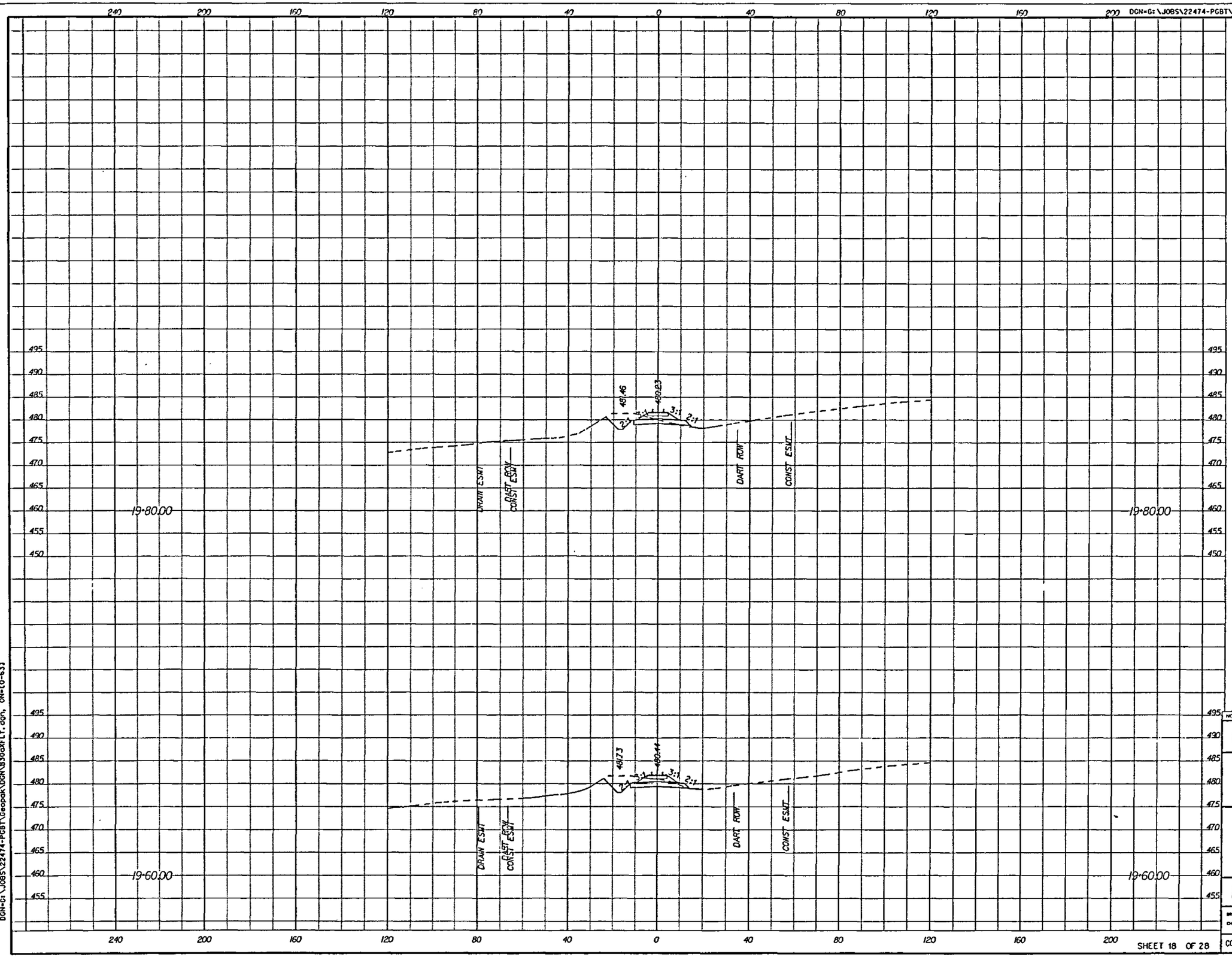

NO.	DATE	REVISION	APPROV.

PRESIDENT GEORGE BUSH TURNPIKE

NTTA
NORTH TEXAS TOLLWAY AUTHORITY

CROSS SECTION
RAILROAD

Parsons Brinckerhoff Quade & Douglas, Inc.
2777 Stemmons Freeway
Suite 1133
Dallas, TX 75207

SECTION XXX

DRAWN ____ DATE ____ DESIGNED ____ DATE ____
CHECKED ____ DATE ____ SCALE ____

CONTRACT NO. 02011-PGB-06-CN-EN SHEET 1320

SHEET 18 OF 28

DGN=G:\JOBS\22474-PGBT\Geopak\DGN\B30aXFLT.dgn, ON=[0-63]

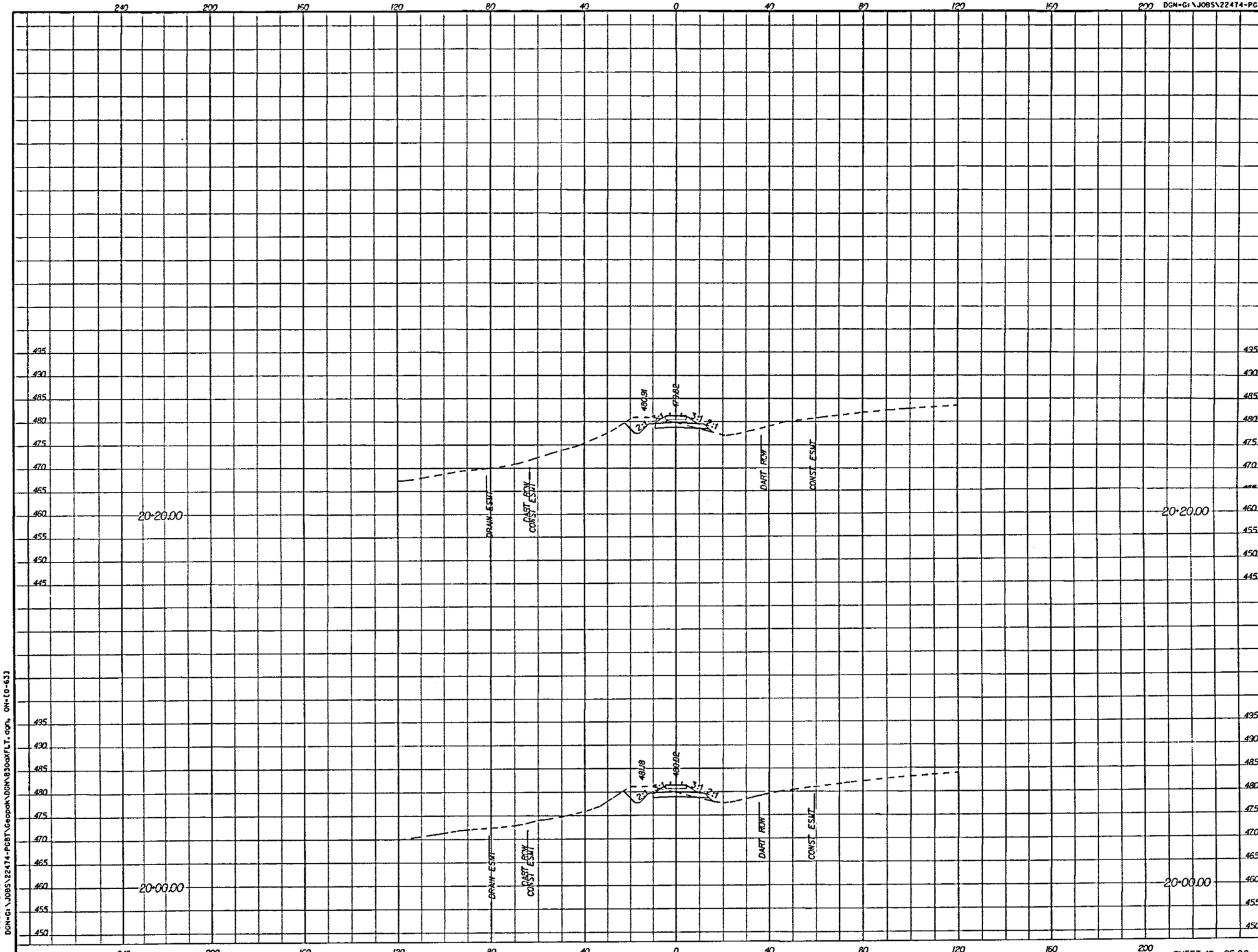

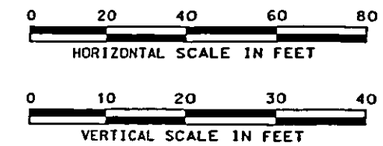

NO.	DATE	REVISION	APPROV.

PRESIDENT GEORGE BUSH TURNPIKE

NTTA
NORTH TEXAS TOLLWAY AUTHORITY

CROSS SECTION
RAILROAD

Parsons Brinckerhoff Quade & Douglas, Inc.
2777 Stemmons Freeway
Suite 1533
Dallas, TX 75207

SECTION XXX

DRAWN ____ DATE ____ DESIGNED ____ DATE ____
CHECKED ____ DATE ____ SCALE ____

CONTRACT NO. 02011-PGB-06-CN-EN SHEET 1321

SHEET 19 OF 28

Plotted 09-JAN-2008 19:23
DGN=G:\JOBS\22474-PGBT\Geopak\DGN\B30aXFLT.dgn, ON=[0-63]

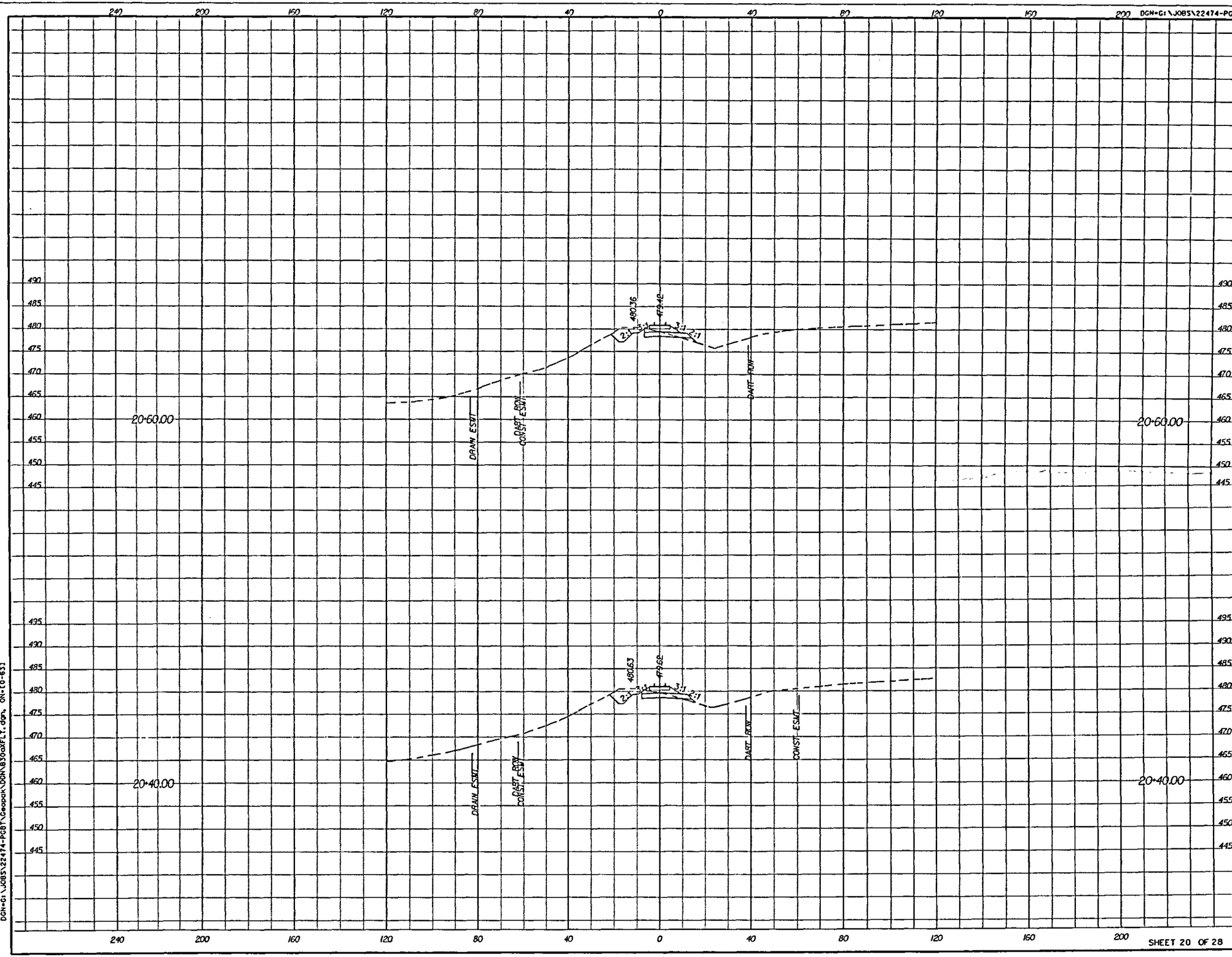

0 20 40 60 80
HORIZONTAL SCALE IN FEET

0 10 20 30 40
VERTICAL SCALE IN FEET

NO.	DATE	REVISION	APPROV.

PRESIDENT GEORGE BUSH TURNPIKE

NTTA
NORTH TEXAS TOLLWAY AUTHORITY

CROSS SECTION
RAILROAD

Parsons Brinckerhoff Quade & Douglas, Inc.
2777 Stemmons Freeway
Suite 1333
Dallas, TX 75207

SECTION XXX

DRAWN _____ DATE _____ DESIGNED _____ DATE _____
CHECKED _____ DATE _____ SCALE _____

CONTRACT NO. 02011-PGB-06-CN-EN SHEET 1322

SHEET 20 OF 28

Plotted 03-JAN-2008 19:23
DGN=G:\JOBS\22474-PGBT\Geopak\DGN\B30aXFLT.dgn, ON=[0-63]

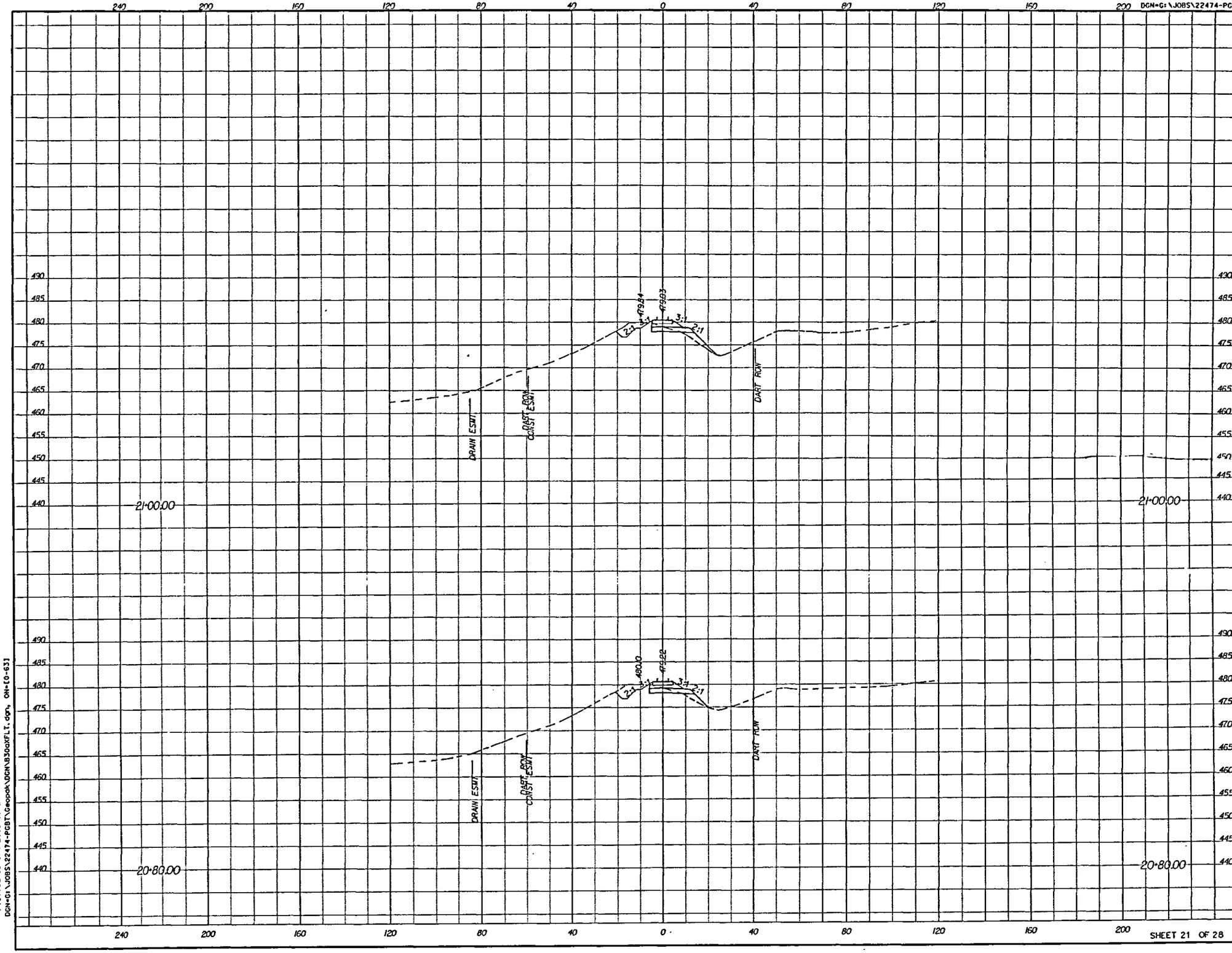

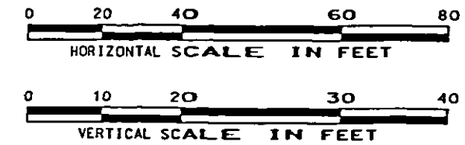

NO.	DATE	REVISIONS	APPROV.

PRESIDENT GEORGE BUSH TURNPIKE

NTTA
NORTH TEXAS TOLLWAY AUTHORITY

CROSS SECTION RAILROAD

Parsons Brinckerhoff Quade & Douglas, Inc.
2777 Stemmons Freeway
Suite 833
Dallas, TX 75207

SECTION XXX

DRAWN ____ DATE ____ DESIGNED ____ DATE ____
CHECKED ____ DATE ____ SCALE ____

CONTRACT NO. 02011-PGB-06-CN-EN SHEET 1323

SHEET 21 OF 28

DGN=G:\JOBS\22474-PGBT\Geopak\DGN\B30aXFLT.dgn, ON=[0-63]

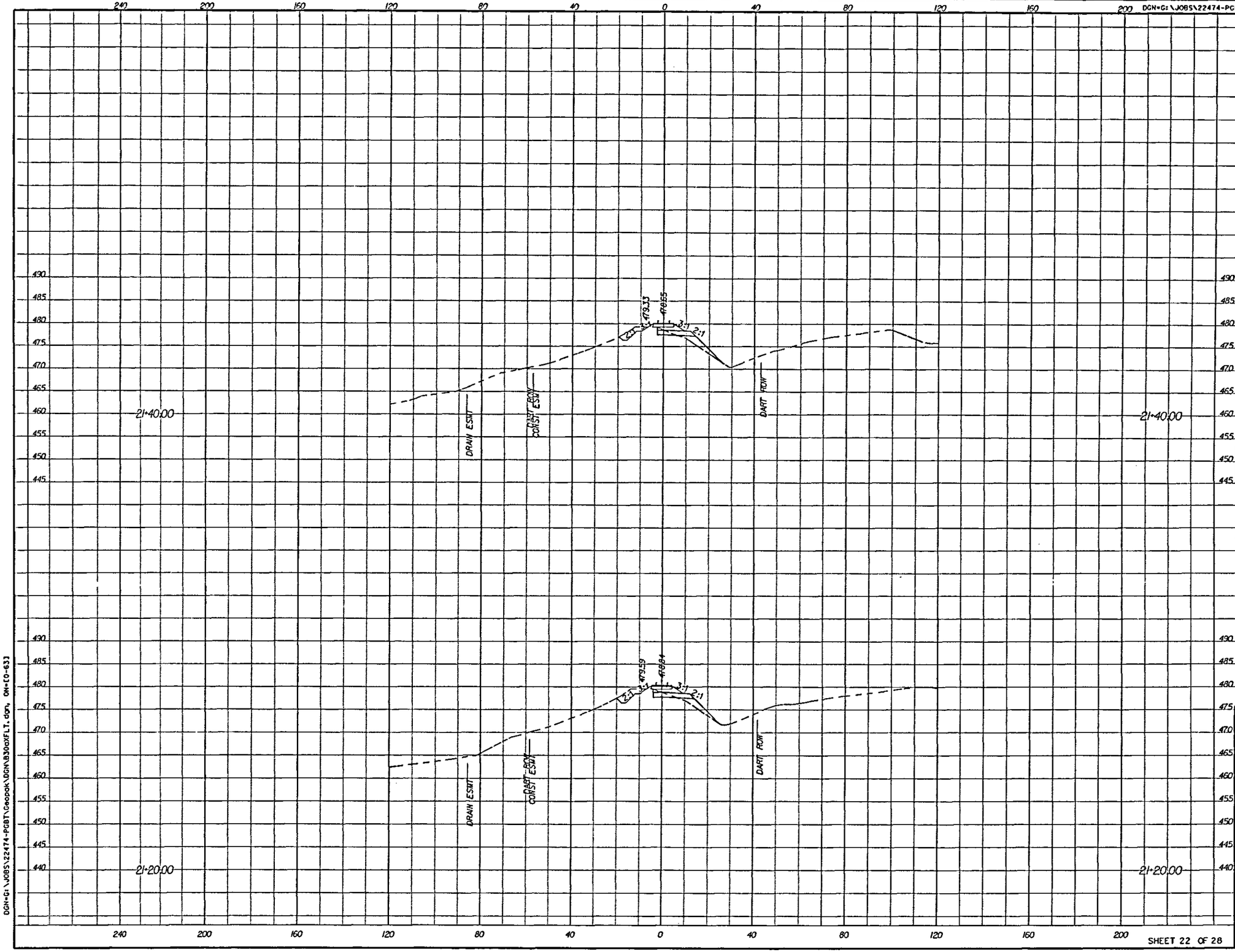

0 20 40 60 80
HORIZONTAL SCALE IN FEET

0 10 20 30 40
VERTICAL SCALE IN FEET

NO.	DATE	REVISION	APPROV.

PRESIDENT GEORGE BUSH TURNPIKE

NTTA
NORTH TEXAS TOLLWAY AUTHORITY

CROSS SECTION
RAILROAD

Parsons Brinckerhoff Quade & Douglas, Inc.
2777 Stemmons Freeway
Suite 1313
Dallas, TX 75207

SECTION XXX

DRAWN ____ DATE ____ DESIGNED ____ DATE ____
CHECKED ____ DATE ____ SCALE ____

CONTRACT NO. 02011-PGB-06-CN-EN SHEET 1324

SHEET 22 OF 28

Plotted 09-JAN-2008 19:23
DGN=G:\JOBS\22474-PGBT\Geopak\DGN\B30aXFLT.dgn, ON=[0-63]

DGN=G:\JOBS\22474-PGBT\Geopak\DGN\B30aXFLT.dgn, ON=[0-63]

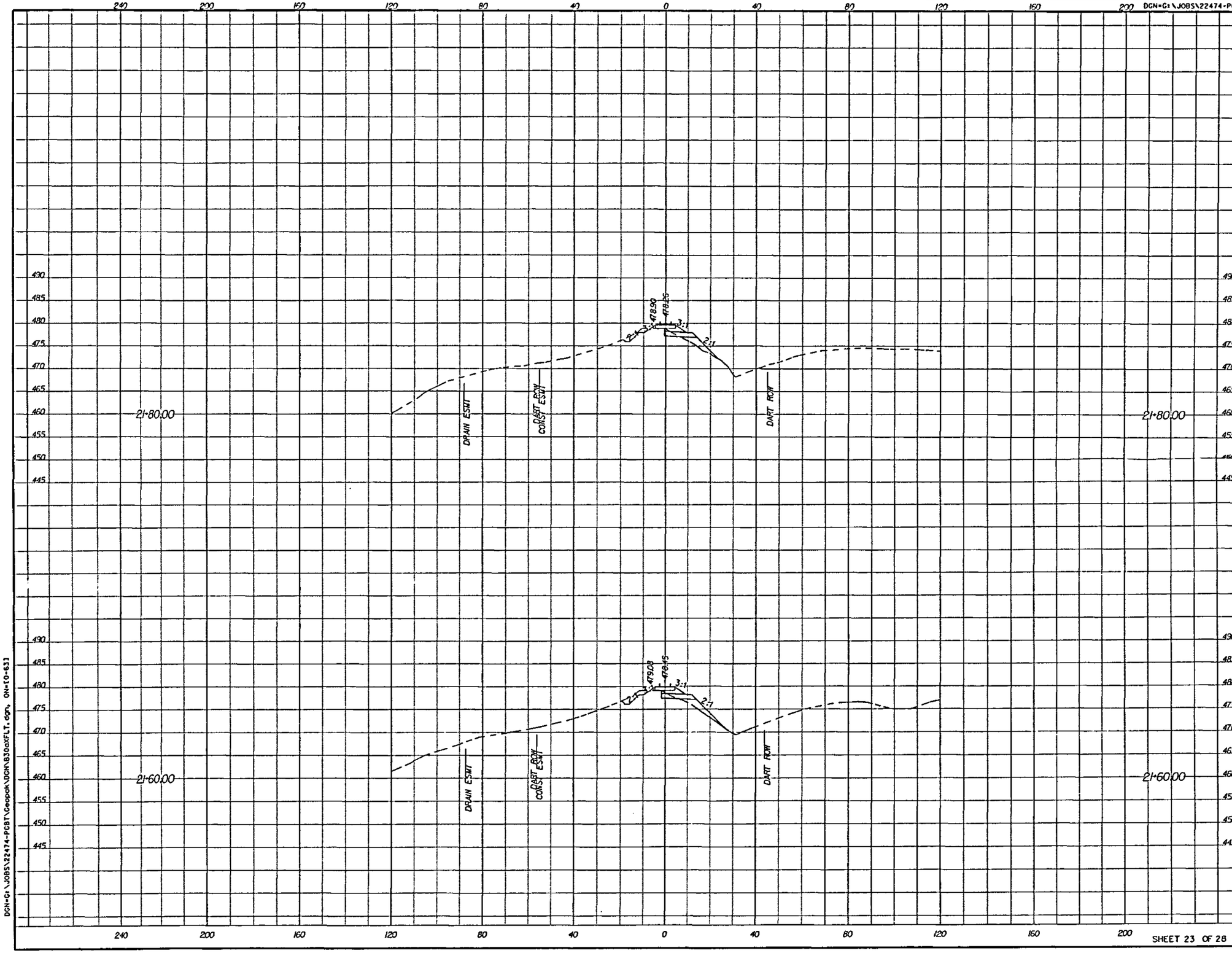

0 20 40 60 80
HORIZONTAL SCALE IN FEET

0 10 20 30 40
VERTICAL SCALE IN FEET

NO.	DATE	REVISION	APPROV.

PRESIDENT GEORGE BUSH TURNPIKE

NTTA
NORTH TEXAS TOLLWAY AUTHORITY

CROSS SECTION
RAILROAD

Parsons Brinckerhoff Quade & Douglas, Inc.
2777 Stemmons Freeway
Suite 1033
Dallas, TX 75207

SECTION XXX

DRAWN ____ DATE ____ DESIGNED ____ DATE ____
CHECKED ____ DATE ____ SCALE ____

CONTRACT NO. 02011-PGB-06-CN-EN SHEET 1325

SHEET 23 OF 28

Plotted 09-JAN-2008 19:23
DGN=G:\JOBS\22474-PGBT\Geopak\DGN\B30aXFLT.dgn, ON=[0-63]

DGN=G:\JOBS\22474-PGBT\Geopak\DGN\B30aXFLT.dgn, ON=[0-63]

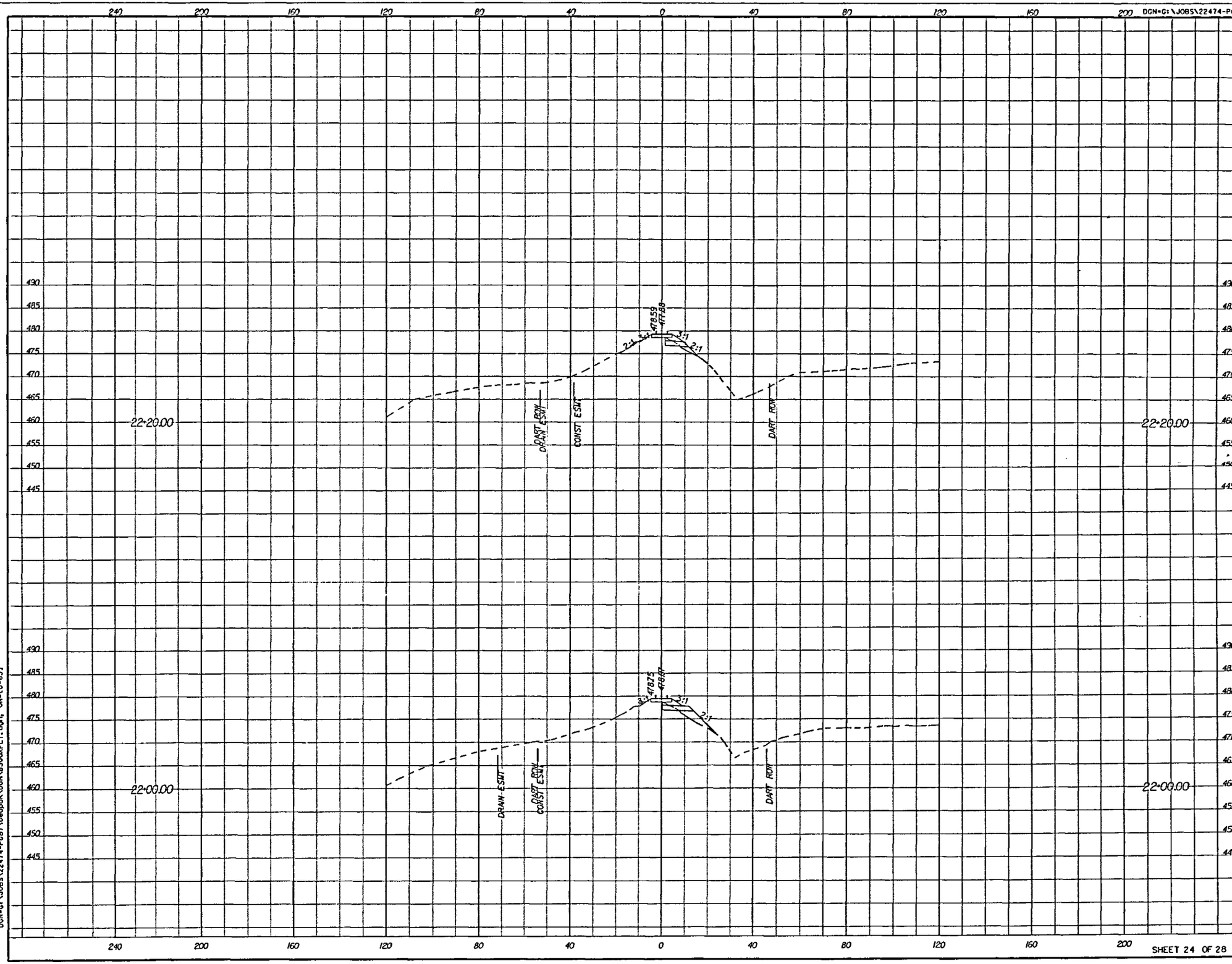

0 20 40 60 80
HORIZONTAL SCALE IN FEET

0 10 20 30 40
VERTICAL SCALE IN FEET

NO.	DATE	REVISION	APPROV.

PRESIDENT GEORGE BUSH TURNPIKE

NTTA
NORTH TEXAS TOLLWAY AUTHORITY

CROSS SECTION
RAILROAD

Parsons Brinckerhoff Quade & Douglas, Inc.
2777 Stemmons Freeway
Suite 833
Dallas, TX 75207

SECTION XXX

DRAWN ____ DATE ____ DESIGNED ____ DATE ____
CHECKED ____ DATE ____ SCALE ____

CONTRACT NO. 02011-PGB-06-CN-EN SHEET 1326

SHEET 24 OF 28

Plotted 09-JAN-2008 19:23
DGN=G:\JOBS\22474-PGBT\Geopak\DGN\B30aXFLT.dgn, ON=[0-63]

DGN=G:\JOBS\22474-PGBT\Geopak\DGN\B30aXFLT.dgn, ON=[0-63]

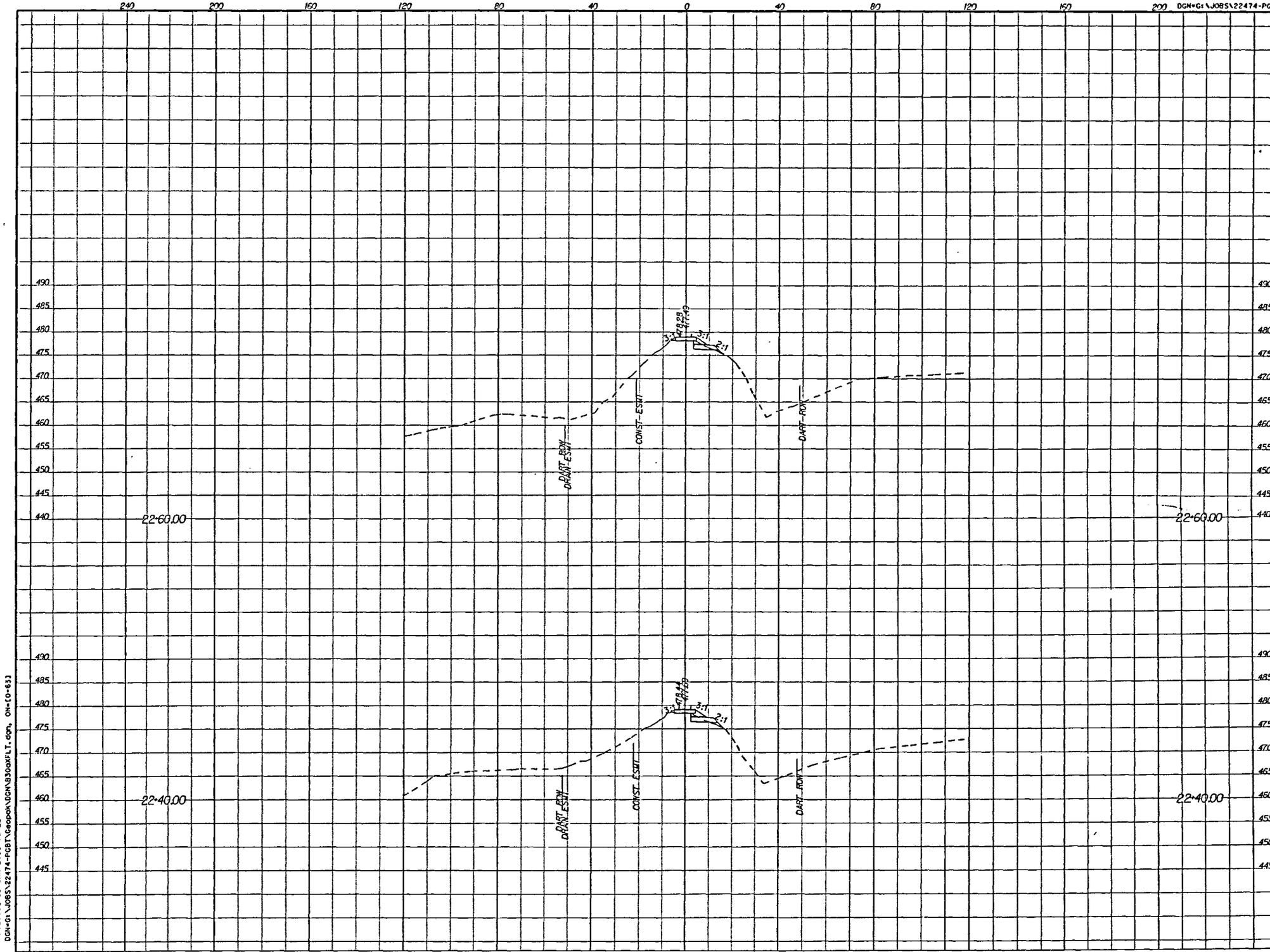

0 20 40 60 80
HORIZONTAL SCALE IN FEET

0 10 20 30 40
VERTICAL SCALE IN FEET

NO.	DATE	REVISION	APPROV.

PRESIDENT GEORGE BUSH TURNPIKE

NTTA
NORTH TEXAS TOLLWAY AUTHORITY

CROSS SECTION
RAILROAD

PB Parsons Brinckerhoff Quade & Douglas, Inc.
2777 Stemmons Freeway
Suite 1333
Dallas, TX 75207

SECTION XXX

DRAWN _____ DATE _____ DESIGNED _____ DATE _____
CHECKED _____ DATE _____ SCALE _____

CONTRACT NO. 02011-PGB-06-CN-EN SHEET 1327

SHEET 25 OF 28

Plotted 09-JAN-2008 19:23
DGN=G:\JOBS\22474-PGBT\Geopak\DGN\B30aXFLT.dgn, ON=[0-63]

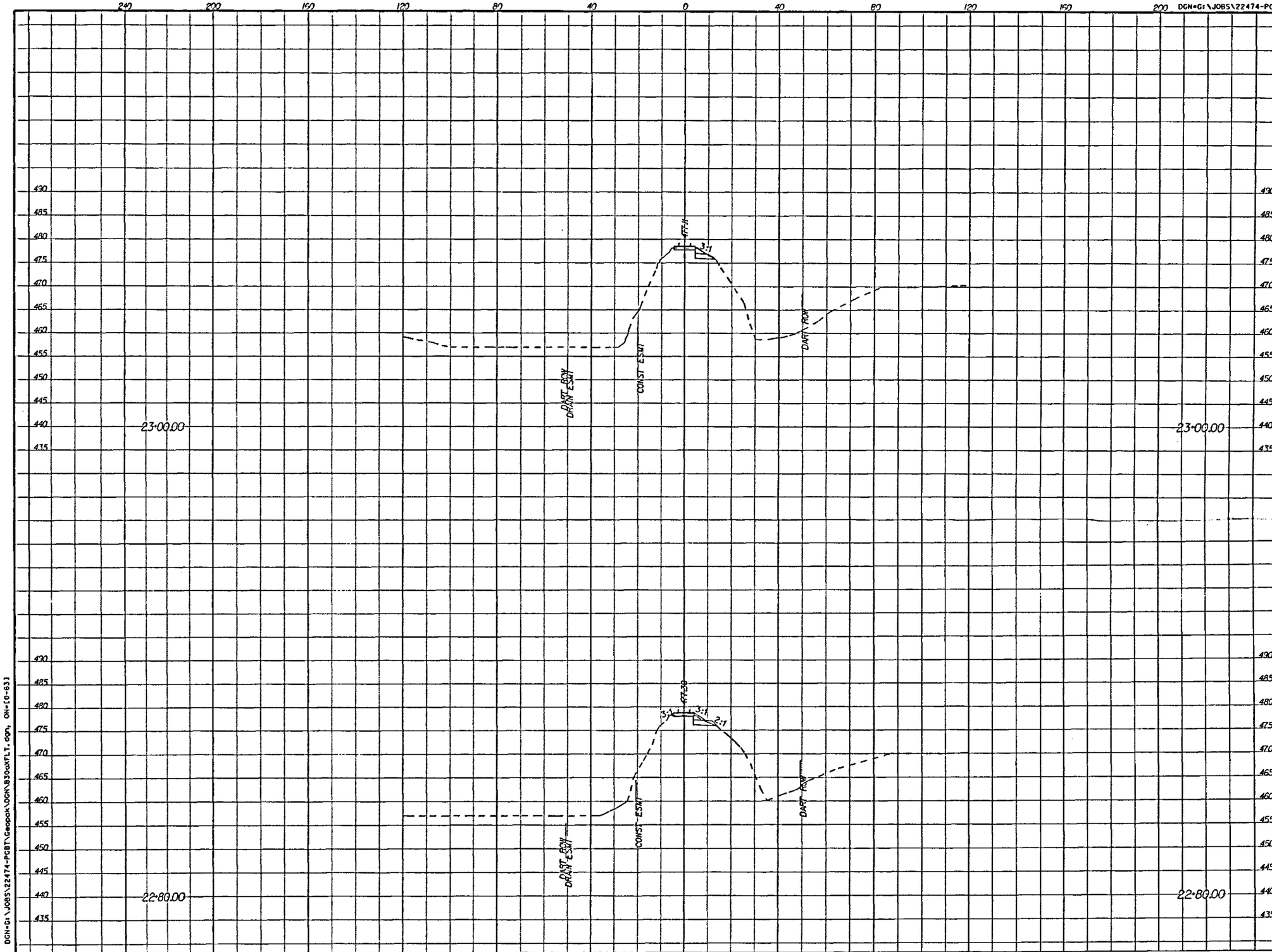

0 20 40 60 80
HORIZONTAL SCALE IN FEET

0 10 20 30 40
VERTICAL SCALE IN FEET

NO.	DATE	REVISION	APPROV.

PRESIDENT GEORGE BUSH TURNPIKE

NTTA
NORTH TEXAS TOLLWAY AUTHORITY

CROSS SECTION
RAILROAD

PB Parsons Brinckerhoff Quade & Douglas, Inc.
2777 Stemmons Freeway
Suite 833
Dallas, TX 75207

SECTION XXX

DRAWN ____ DATE ____ ENG SIGNED ____ DATE ____
CHECKED ____ DATE ____ SCALE ____

CONTRACT NO. 02011-PGB-06-CN-EN SHEET 1328

SHEET 26 OF 28

Plotted 09-JAN-2008 19:23
DGN=G:\JOBS\22474-PGBT\Geopak\DGN\B30oXFLT.dgn, ON=[0-63]

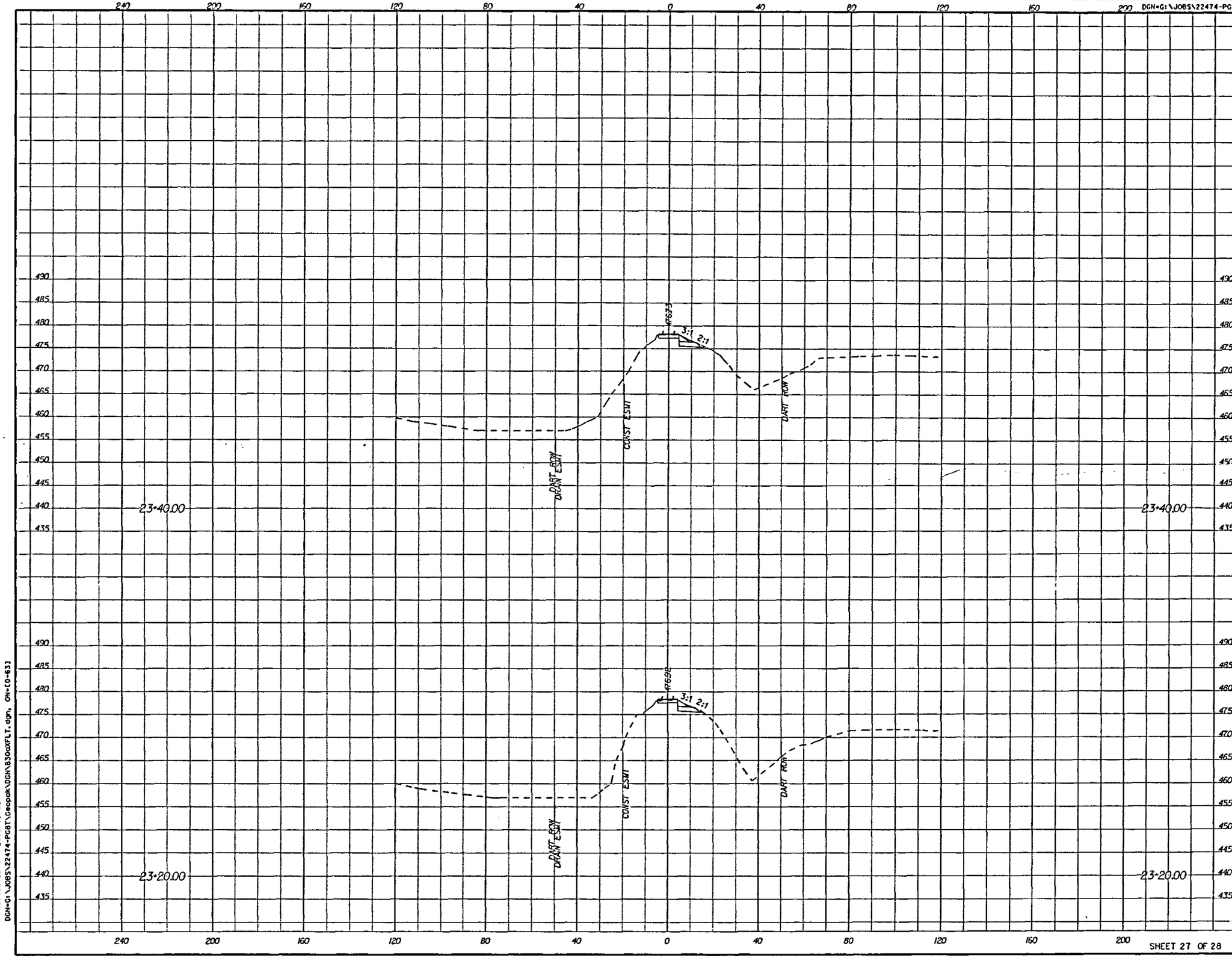

0 20 40 60 80
HORIZONTAL SCALE IN FEET

0 10 20 30 40
VERTICAL SCALE IN FEET

NO.	DATE	REVISION	APPROV.

PRESIDENT GEORGE BUSH TURNPIKE

NTTA
NORTH TEXAS TOLLWAY AUTHORITY

CROSS SECTION
RAILROAD

Parsons Brinckerhoff Quade & Douglas, Inc.
2777 Stemmons Freeway
Suite 1313
Dallas, TX 75207

SECTION XXX

DRAWN ____ DATE ____ DESIGNED ____ DATE ____
CHECKED ____ DATE ____ SCALE ____

CONTRACT NO. 02011-PGB-06-CN-EN SHEET 1329

SHEET 27 OF 28

Plotted 09-JAN-2008 19:23
DGN=G:\JOBS\22474-PGBT\Geopak\DGN\B30aXFLT.dgn, ON=(0-63)

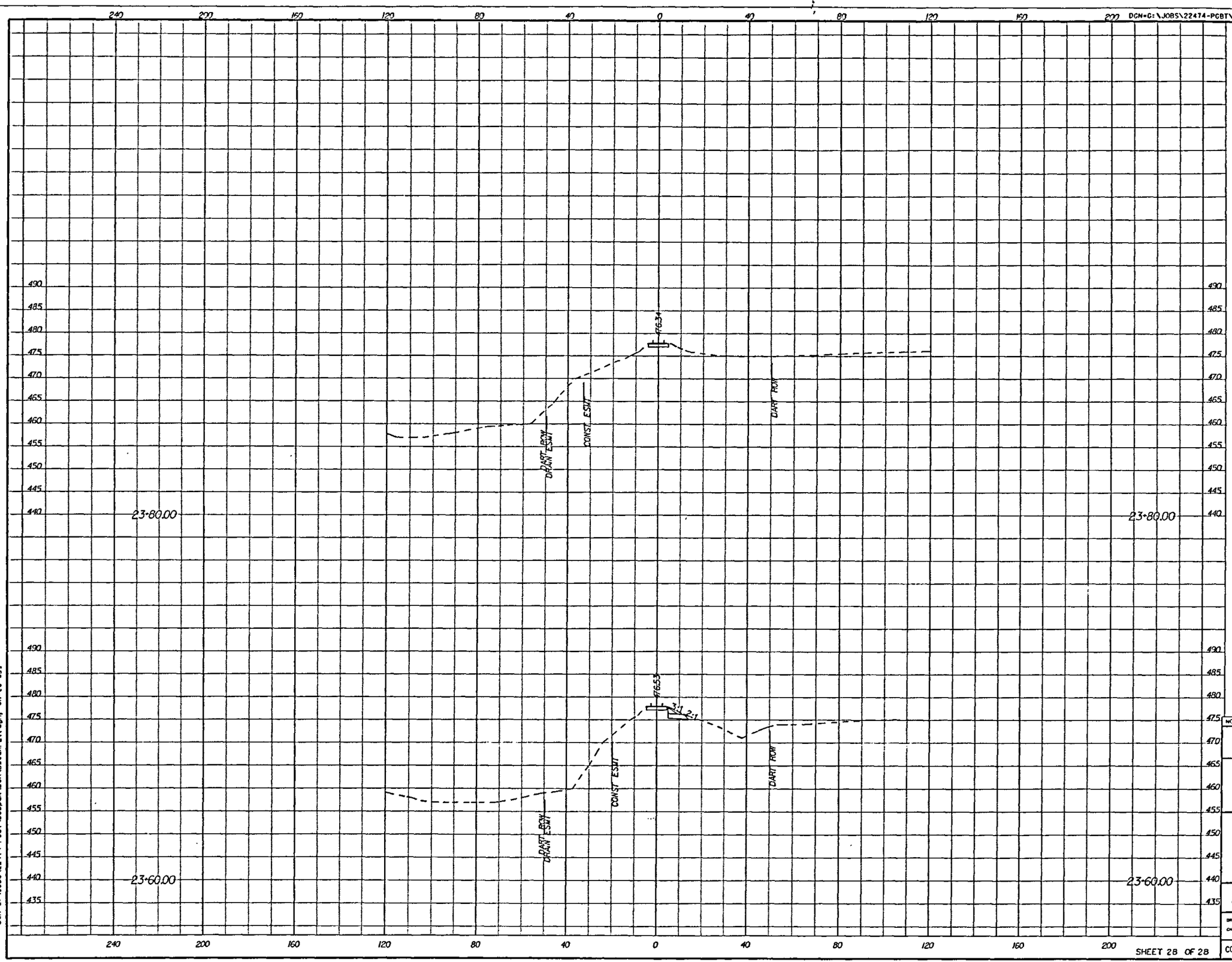

NO.	DATE	REVISION	APPROV.

PRESIDENT GEORGE BUSH TURNPIKE

NTTA
NORTH TEXAS TOLLWAY AUTHORITY

CROSS SECTION
RAILROAD

Parsons Brinckerhoff Quade & Douglas, Inc.
2777 Stemmons Freeway
Suite 1313
Dallas, TX 75207

SECTION XXX

DRAWN ____ DATE ____ DESIGNED ____ DATE ____
CHECKED ____ DATE ____ SCALE ____

SHEET 28 OF 28

CONTRACT NO. 02011-PGB-06-CN-EN SHEET 330